HD74LS03 ●Quadruple 2-input Positive NAND Gates (with Open Collector Outputs)

■CIRCUIT SCHEMATIC(¼)

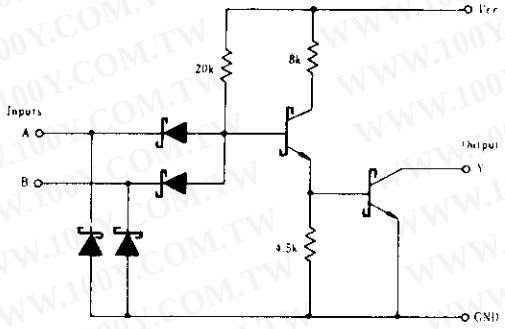

■PIN ARRANGEMENT

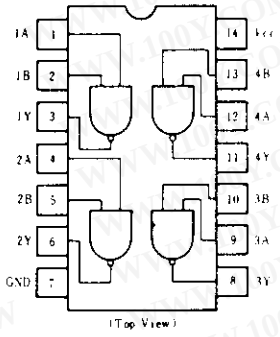

勝 特 力 材 料 886-3-5753170
胜特力电子(上海) 86-21-54151736
胜特力电子(深圳) 86-755-83298787
Http://www.100y.com.tw

■RECOMMENDED OPERATING CONDITIONS

Item	Symbol	min	typ	max	Unit
High level output voltage	V_{OH}	–	–	5.5	V
Low level output current	I_{OL}	–	–	8	mA

■ELECTRICAL CHARACTERISTICS (Ta=−20～+75℃)

Item	Symbol	Test Conditions		min	typ*	max	Unit
Input voltage	V_{IH}			2.0	–	–	V
	V_{IL}			–	–	0.8	V
Output voltage	V_{OL}	V_{CC}=4.75V, V_{IH}=2V	I_{OL}=8mA	–	–	0.5	V
			I_{OL}=4mA	–	–	0.4	
Input current	I_{IH}	V_{CC}=5.25V, V_I=2.7V		–	–	20	μA
	I_{IL}	V_{CC}=5.25V V_I=0.4V		–	–	−0.4	mA
	I_I	V_{CC}=5.25V, V_I=7V		–	–	0.1	mA
Output current	I_{OH}	V_{CC}=4.75V, V_{IL}=0.8V, V_{OH}=5.5V		–	–	100	μA
Supply current	I_{CCH}	V_{CC}=5.25V		–	0.8	1.6	mA
	I_{CCL}	V_{CC}=5.25V		–	2.4	4.4	mA
Input clamp voltage	V_{IK}	V_{CC}=4.75V, I_{IN}=−18mA		–	–	−1.5	V

* V_{CC}=5V, Ta=25°C

■SWITCHING CHARACTERISTICS (V_{CC}=5V, Ta=25℃)

Item	Symbol	Test Conditions	min	typ	max	Unit
Propagation delay time	t_{PLH}	C_L=15pF, R_L=2kΩ	–	17	32	ns
	t_{PHL}		–	15	28	ns

Note) Refer to Test Circuit and Waveform of the Common Item

Unit: mm

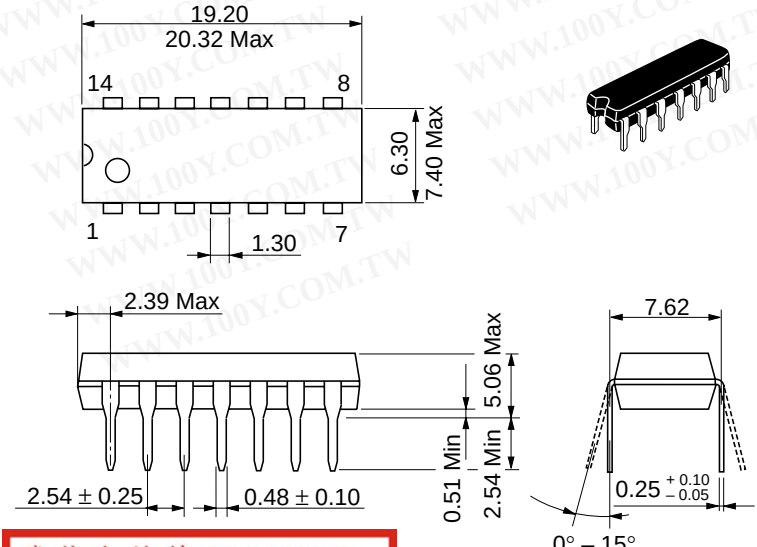

勝 特 力 材 料 886-3-5753170
胜特力电子(上海) 86-21-54151736
胜特力电子(深圳) 86-755-83298787
Http://www.100y.com.tw

Hitachi Code	DP-14
JEDEC	Conforms
EIAJ	Conforms
Weight (reference value)	0.97 g

Unit: mm

勝 特 力 材 料 886-3-5753170
胜特力电子(上海) 86-21-54151736
胜特力电子(深圳) 86-755-83298787
Http://www.100y.com.tw

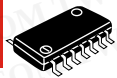

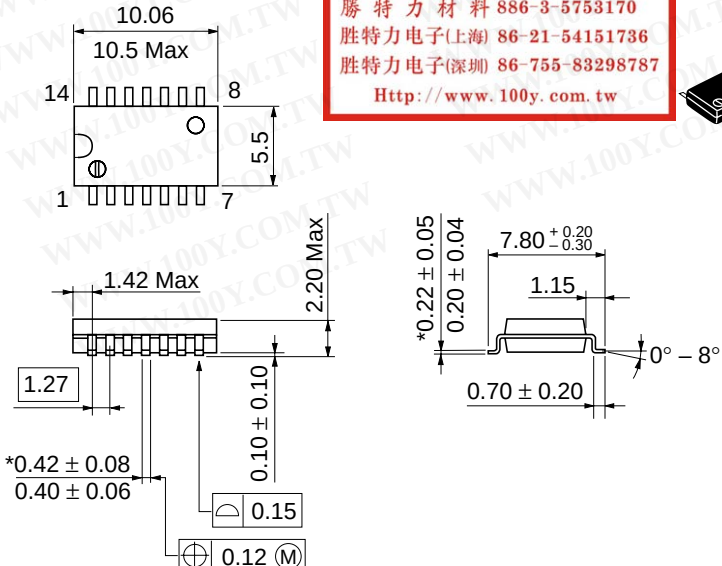

Hitachi Code	FP-14DA
JEDEC	—
EIAJ	Conforms
Weight (reference value)	0.23 g

*Dimension including the plating thickness
Base material dimension

Unit: mm

勝 特 力 材 料 886-3-5753170
胜特力电子(上海) 86-21-54151736
胜特力电子(深圳) 86-755-83298787
Http://www.100y.com.tw

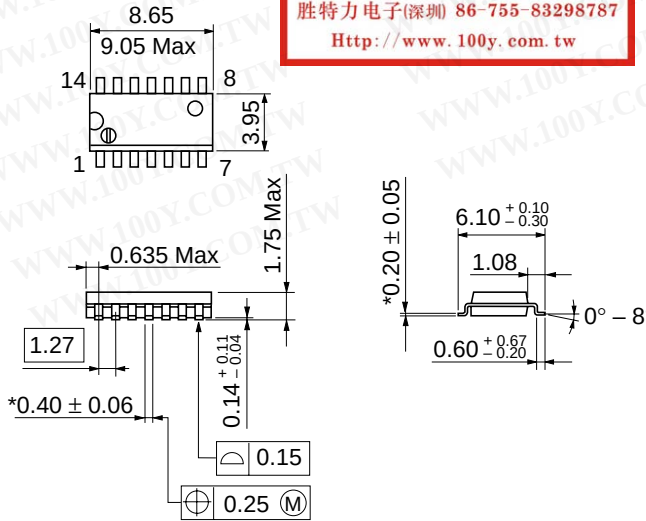

Hitachi Code	FP-14DN
JEDEC	Conforms
EIAJ	Conforms
Weight (reference value)	0.13 g

*Pd plating