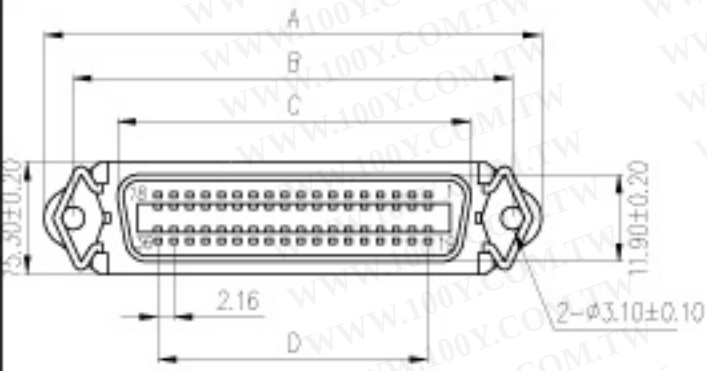


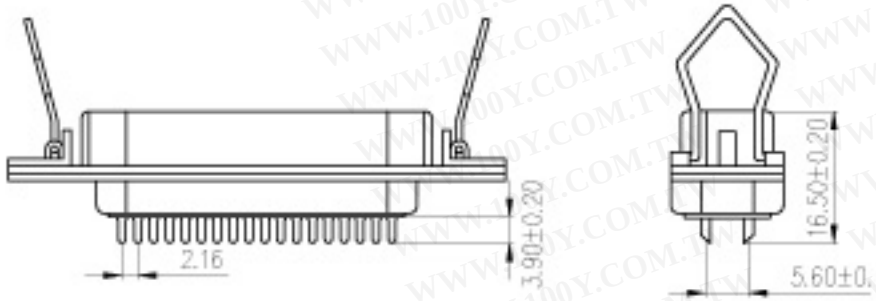


Note:

1.Material:

1.1 Insulator: P.B.T UL 94-V0 rated.
1.2 Contact: Brass,t=0.25mm.
1.3 Front shell: Cold rolled steel,t=0.45mm,0.50mm,0.60mm
1.4 Back shell:Cold rolled steel,t=0.40mm.

2.Specification:

2.1 Current rating: 1 A Max.
2.2 Dielectric withstanding voltage: 500 V(ac) for 1 minute.
2.3 Contact resistance: 30 mΩ Max.
2.4 Insulation resistance: 1000 MΩ Min at DC 500V.
2.5 Total mating force: 4.0 Kgf Max.
2.6 Total unmating force: 1.0 Kgf Min.
2.7 Temperature range: -55°C~+105°C

| PART NO | A±0.20 | B±0.20 | C±0.20 | D±0.20 |
|---|---|---|---|---|
| CN-14S | 43.90 | 35.99 | 25.20 | 12.96 |
| CN-24S | 54.71 | 46.79 | 36.00 | 23.76 |
| CN-36S | 67.69 | 59.74 | 48.90 | 36.72 |
| CN-50S | 82.78 | 74.85 | 64.00 | 51.84 |


勝 特 力 材 料 886-3-5753170
胜特力电子(上海) 86-21-54151736
胜特力电子(深圳) 86-755-83298787
Http://www.100y.com.tw


| No. | Name | Q'ty | Material | Remarks & Thickness | Finish |
|---|---|---|---|---|---|
| 7 | Trangle | 2 | Cold Rolled Steel | T=0.60mm | Nickel Plated |
| 5 | Spring | 2 | Stainless | ø0.9 | Nickel Plated |
| 4 | Back-shell | 1 | Cold Rolled Steel | T=0.40mm | Tin Plated |
| 3 | Front-shell | 1 | Cold Rolled Steel | T=0.45mm, 0.50mm,0.60mm | Nickel Plated |
| 2 | Contact | 36 | Brass | T=0.25mm | Gold Flashed |
| 1 | Housing | 1 | P.B.T | UL 94-V0 | Black/White/Blue |

| REV | Date | FILE | BY |
|---|---|---|---|
| E | | | |
| D | | | |
| C | | | |
| B | | | |
| A | | | JECSON |

DRAWN:
CHECKED:
GENERAL TOLERANCE:
UNIT:
SCALE:
SHEET:
PROJECTION:
DESCRIPTION:
PART NO: E19-xxP
SIZE A4