MITSUBISHI ELECTRIC

700 series

勝 特 力 材 料 886-3-5753170
胜特力电子(上海) 86-21-34970699
胜特力电子(深圳) 86-755-83298787
Http://www.100y.com.tw

INVERTER FR-A700

INSTRUCTION MANUAL (BASIC)

FR-A720-0.4K to 90K
FR-A740-0.4K to 500K

Thank you for choosing this Mitsubishi Inverter.
This Instruction Manual (basic) is intended for users who "just want to run the inverter".
If you are going to utilize functions and performance, refer to the *Instruction Manual (applied)* [IB-0600226ENG].
The *Instruction Manual (applied)* is separately available from where you purchased the inverter or your Mitsubishi sales representative.

CONTENTS

1 PRODUCT CHECKING AND PARTS IDENTIFICATION 1

2 INSTALLATION AND WIRING 2
2.1 Peripheral devices 3
2.2 Method of removal and reinstallation of the front cover 5
2.3 Installation of the inverter and instructions 7
2.4 Wiring 8
2.5 Power-off and magnetic contactor (MC) 35
2.6 Precautions for use of the inverter 36
2.7 When using the high-duty brake resistor (FR-ABR) 37

3 DRIVE THE MOTOR 38
3.1 Step of operation 38
3.2 Operation panel (FR-DU07) 39
3.3 Before operation 48
3.4 Start/stop from the operation panel (PU operation mode) 73
3.5 Make a start and stop with terminals (external operation) 78
3.6 Parameter List 85

4 TROUBLESHOOTING 129
4.1 Reset method of protective function 129
4.2 List of alarm display 130
4.3 Causes and corrective actions 131
4.4 Correspondences between digital and actual characters 143
4.5 Check and clear of the alarm history 144
4.6 Check first when you have troubles 146

5 PRECAUTIONS FOR MAINTENANCE AND INSPECTION 149
5.1 Inspection item 149

6 SPECIFICATIONS 157
6.1 Rating 157
6.2 Common specifications 161
6.3 Outline dimension drawings 162
6.4 Heatsink protrusion attachment procedure 175

This instruction manual (basic) provides handling information and precautions for use of the equipment.
Please forward this instruction manual (basic) to the end user.

This section is specifically about safety matters

Do not attempt to install, operate, maintain or inspect the inverter until you have read through this instruction manual (basic) and appended documents carefully and can use the equipment correctly. Do not use the inverter until you have a full knowledge of the equipment, safety information and instructions. In this instruction manual (basic), the safety instruction levels are classified into "WARNING" and "CAUTION".

⚠WARNING Assumes that incorrect handling may cause hazardous conditions, resulting in death or severe injury.

⚠CAUTION Assumes that incorrect handling may cause hazardous conditions, resulting in medium or slight injury, or may cause physical damage only.

Note that even the **⚠CAUTION** level may lead to a serious consequence according to conditions. Please follow strictly the instructions of both levels because they are important to personnel safety.

1. Electric Shock Prevention

⚠WARNING

- While power is on or when the inverter is running, do not open the front cover. Otherwise you may get an electric shock.
- Do not run the inverter with the front cover or wiring cover removed. Otherwise, you may access the exposed high-voltage terminals or the charging part of the circuitry and get an electric shock.
- Even if power is off, do not remove the front cover except for wiring or periodic inspection.You may access the charged inverter circuits and get an electric shock.
- Before starting wiring or inspection, check to make sure that the operation panel indicator is off, wait for at least 10 minutes after the power supply has been switched off, and check that there are no residual voltage using a tester or the like. The capacitor is charged with high voltage for some time after power off and it is dangerous.
- This inverter must be earthed (grounded). Earthing (grounding) must conform to the requirements of national and local safety regulations and electrical codes. (JIS, NEC section 250, IEC 536 class 1 and other applicable standards)
- Any person who is involved in the wiring or inspection of this equipment should be fully competent to do the work.
- Always install the inverter before wiring. Otherwise, you may get an electric shock or be injured.
- Perform setting dial and key operations with dry hands to prevent an electric shock. Otherwise you may get an electric shock.
- Do not subject the cables to scratches, excessive stress, heavy loads or pinching. Otherwise you may get an electric shock.
- Do not replace the cooling fan while power is on. It is dangerous to replace the cooling fan while power is on.
- Do not touch the printed circuit board with wet hands. You may get an electric shock.

2. Fire Prevention

⚠CAUTION

- Mount the inverter to non-combustible surface such as metal or concrete. Mounting it to or near combustible material can cause a fire.
- If the inverter has become faulty, switch off the inverter power. A continuous flow of large current could cause a fire.
- When using a brake resistor, make up a sequence that will turn off power when an alarm signal is output. Otherwise, the brake resistor may excessively overheat due to damage of the brake transistor and such, causing a fire.
- Do not connect a resistor directly to the DC terminals P/+, N/–. This could cause a fire.

3. Injury Prevention

⚠CAUTION

- Apply only the voltage specified in the instruction manual to each terminal. Otherwise, burst, damage, etc. may occur.
- Ensure that the cables are connected to the correct terminals. Otherwise, burst, damage, etc. may occur.
- Always make sure that polarity is correct to prevent damage, etc. Otherwise, burst, damage, etc. may occur.
- While power is on or for some time after power-off, do not touch the inverter as it is hot and you may get burnt.

4. Additional Instructions

Also note the following points to prevent an accidental failure, injury, electric shock, etc.

(1) Transportation and installation

⚠CAUTION

- When carrying products, use correct lifting gear to prevent injury.
- Do not stack the inverter boxes higher than the number recommended.
- Ensure that installation position and material can withstand the weight of the inverter. Install according to the information in the instruction manual.
- Do not install or operate the inverter if it is damaged or has parts missing. This can result in breakdowns.
- When carrying the inverter, do not hold it by the front cover or setting dial; it may fall off or fail.
- Do not stand or rest heavy objects on the product.
- Check the inverter mounting orientation is correct.
- Prevent other conductive bodies such as screws and metal fragments or other flammable substance such as oil from entering the inverter.
- As the inverter is a precision instrument, do not drop or subject it to impact.
- Use the inverter under the following environmental conditions. Otherwise, the inverter may be damaged.

Environment	Ambient temperature	-10°C to +50°C (non-freezing)
	Ambient humidity	90% RH or less (non-condensing)
	Storage temperature	-20°C to +65°C *1
	Atmosphere	Indoors (free from corrosive gas, flammable gas, oil mist, dust and dirt)
	Altitude, vibration	Maximum 1000m above sea level for standard operation. 5.9m/s^2 or less *2 (conforming to JIS C 60068-2-6)

*1 Temperature applicable for a short time, e.g. in transit.
*2 2.9m/s^2 or less for the 160K or more.

(2) Wiring

⚠CAUTION

- Do not install a power factor correction capacitor or surge suppressor/radio noise filter (capacitor type filter) on the inverter output side.
- The connection orientation of the output cables U, V, W to the motor will affect the direction of rotation of the motor.

(3) Test operation and adjustment

⚠CAUTION

- Before starting operation, confirm and adjust the parameters. A failure to do so may cause some machines to make unexpected motions.

(4) Operation

⚠WARNING

- When you have chosen the retry function, stay away from the equipment as it will restart suddenly after an alarm stop.
- The STOP RESET key is valid only when the appropriate function setting has been made. Prepare an emergency stop switch separately.
- Make sure that the start signal is off before resetting the inverter alarm. A failure to do so may restart the motor suddenly.
- The load used should be a three-phase induction motor only. Connection of any other electrical equipment to the inverter output may damage the inverter as well as equipment.
- Performing pre-excitation (LX signal and X13 signal) under torque control (real sensorless vector control) may start the motor running at a low speed even when the start command (STF or STR) is not input. The motor may run also at a low speed when the speed limit value = 0 with a start command input. Perform pre-excitation after making sure that there will be no problem in safety if the motor runs.
- Do not modify the equipment.
- Do not perform parts removal which is not instructed in this manual. Doing so may lead to fault or damage of the inverter.

⚠CAUTION

- The electronic thermal relay function does not guarantee protection of the motor from overheating.
- Do not use a magnetic contactor on the inverter input for frequent starting/ stopping of the inverter.
- Use a noise filter to reduce the effect of electromagnetic interference. Otherwise nearby electronic equipment may be affected.
- Take measures to suppress harmonics. Otherwise power supply harmonics from the inverter may heat/damage the power factor correction capacitor and generator.
- When a 400V class motor is inverter-driven, please use an insulation-enhanced motor or measures taken to suppress surge voltages. Surge voltages attributable to the wiring constants may occur at the motor terminals, deteriorating the insulation of the motor.
- When parameter clear or all clear is performed, reset the required parameters before starting operations. Each parameter returns to the initial value.
- The inverter can be easily set for high-speed operation. Before changing its setting, fully examine the performances of the motor and machine.
- In addition to the inverter's holding function, install a holding device to ensure safety.
- Before running an inverter which had been stored for a long period, always perform inspection and test operation.
- For prevention of damage due to static electricity, touch nearby metal before touching this product to eliminate static electricity from your body.

(5) Emergency stop

⚠CAUTION

- Provide a safety backup such as an emergency brake which will prevent the machine and equipment from hazardous conditions if the inverter fails.
- When the breaker on the inverter input side trips, check for the wiring fault (short circuit), damage to internal parts of the inverter, etc. Identify the cause of the trip, then remove the cause and power on the breaker.
- When the protective function is activated, take the corresponding corrective action, then reset the inverter, and resume operation.

(6) Maintenance, inspection and parts replacement

⚠CAUTION

- Do not carry out a megger (insulation resistance) test on the control circuit of the inverter.

(7) Disposing of the inverter

⚠CAUTION

- Treat as industrial waste.

General instructions

Many of the diagrams and drawings in this instruction manual (basic) show the inverter without a cover, or partially open. Never run the inverter in this status. Always replace the cover and follow this instruction manual (basic) when operating the inverter.

勝 特 力 材 料 886-3-5753170
胜特力电子(上海) 86-21-34970699
胜特力电子(深圳) 86-755-83298787
Http://www.100y.com.tw

勝 特 力 材 料 886-3-5753170
胜特力电子(上海) 86-21-34970699
胜特力电子(深圳) 86-755-83298787
Http://www.100y.com.tw

— CONTENTS —

1 PRODUCT CHECKING AND PARTS IDENTIFICATION 1

2 INSTALLATION AND WIRING 2

2.1 Peripheral devices 3
2.2 Method of removal and reinstallation of the front cover 5
2.3 Installation of the inverter and instructions 7
2.4 Wiring 8
2.4.1 Terminal connection diagram 8
2.4.2 EMC filter 9
2.4.3 Specification of main circuit terminal 10
2.4.4 Terminal arrangement of the main circuit terminal, power supply and the motor wiring. 10
2.4.5 Control circuit terminals 20
2.4.6 Changing the control logic 23
2.4.7 Wiring of control circuit 25
2.4.8 When connecting the operation panel using a connection cable 26
2.4.9 RS-485 terminal block 26
2.4.10 Communication operation 27
2.4.11 USB connector 27
2.4.12 Connection of motor with encoder(vector control) 28
2.5 Power-off and magnetic contactor (MC) 35
2.6 Precautions for use of the inverter 36
2.7 When using the high-duty brake resistor (FR-ABR) 37

3 DRIVE THE MOTOR 38

3.1 Step of operation 38
3.2 Operation panel (FR-DU07) 39
3.2.1 Parts of the operation panel (FR-DU07) 39
3.2.2 Basic operation (factory setting) 40
3.2.3 Operation lock (Press [MODE] for an extended time (2s)) 41
3.2.4 Monitoring of output current and output voltage 42
3.2.5 First priority monitor 42
3.2.6 Setting dial push 42
3.2.7 Change the parameter setting value 43
3.2.8 Parameter clear, all parameter clear 44
3.2.9 Parameter copy and parameter verification 45
3.3 Before operation 48
3.3.1 Simple mode parameter list 48
3.3.2 Overheat protection of the motor by the inverter (Pr. 9) 49
3.3.3 When the rated motor frequency is 50Hz (Pr. 3) 50
3.3.4 Increase the starting torque (Pr. 0) 51
3.3.5 Limit the maximum and minimum output frequency (Pr. 1, Pr. 2) 52
3.3.6 Change acceleration and deceleration time (Pr. 7, Pr. 8) 53
3.3.7 Selection of the start command and frequency command locations (Pr. 79) 54
3.3.8 Large starting torque and low speed torque are necessary (advanced magnetic flux vector control, real sensorless vector control) (Pr. 71, Pr. 80, Pr. 81, Pr. 800) 55

3.3.9 Higher accuracy operation using a motor with encoder (Vector control) (Pr.71, Pr.80, Pr.81, Pr.359, Pr.369, Pr.800) 58
3.3.10 To exhibit the best performance of the motor performance (offline auto tuning) (Pr. 71, Pr. 83, Pr. 84, Pr. 96) 63
3.3.11 High accuracy operation unaffected by the motor temperature (online auto tuning) (Pr. 95) 67
3.3.12 To perform high accuracy / fast response operation (gain adjustment of real sensorless vector control) (Pr. 818 to Pr. 821, Pr. 880) 68

3.4 Start/stop from the operation panel (PU operation mode) 73
3.4.1 Set the set frequency to operate (example: performing operation at 30Hz) 73
3.4.2 Use the setting dial like a potentiometer to perform operation. 74
3.4.3 Use switches to give a start command and a frequency command (multi-speed setting) 75
3.4.4 Perform frequency setting by analog (voltage input) 76
3.4.5 Perform frequency setting by analog (current input) 77

3.5 Make a start and stop with terminals (external operation) 78
3.5.1 Use the set frequency set by the operation panel (Pr. 79 = 3) 78
3.5.2 Use switches to give a start command and a frequency command (multi-speed setting) (Pr. 4 to Pr. 6) 79
3.5.3 Perform frequency setting by analog (voltage input) 81
3.5.4 Change the frequency (60Hz) of the maximum value of potentiometer (at 5V, initial value) 82
3.5.5 Perform frequency setting by analog (current input) 83
3.5.6 Change the frequency (60Hz) of the maximum value of potentiometer (at 20mA, initial value) 84

3.6 Parameter List 85
3.6.1 List of parameters classified by purpose of use 85
3.6.2 Parameter list 88

4 TROUBLESHOOTING 129

4.1 Reset method of protective function 129
4.2 List of alarm display 130
4.3 Causes and corrective actions 131
4.4 Correspondences between digital and actual characters 143
4.5 Check and clear of the alarm history 144
4.6 Check first when you have troubles 146
4.6.1 Motor does not rotate as commanded 146
4.6.2 Motor generates abnormal noise 146
4.6.3 Motor generates heat abnormally 146
4.6.4 Motor rotates in opposite direction 147
4.6.5 Speed greatly differs from the setting 147
4.6.6 Acceleration/deceleration is not smooth 147
4.6.7 Motor current is large 147
4.6.8 Speed does not increase 147
4.6.9 Speed varies during operation 147
4.6.10 Operation mode is not changed properly 148
4.6.11 Operation panel (FR-DU07) display is not operating 148
4.6.12 POWER lamp is not lit 148
4.6.13 Parameter write cannot be performed 148

勝 特 力 材 料 886-3-5753170
胜特力电子(上海) 86-21-34970699
胜特力电子(深圳) 86-755-83298787
Http://www.100y.com.tw

5 PRECAUTIONS FOR MAINTENANCE AND INSPECTION 149

5.1 Inspection item 149
5.1.1 Daily inspection 149
5.1.2 Periodic inspection 149
5.1.3 Daily and periodic inspection 150
5.1.4 Display of the life of the inverter parts 151
5.1.5 Cleaning 152
5.1.6 Replacement of parts 152
5.1.7 Inverter replacement 156

6 SPECIFICATIONS 157

6.1 Rating 157
6.1.1 Inverter rating 157
6.1.2 Motor rating 159
6.2 Common specifications 161
6.3 Outline dimension drawings 162
6.3.1 Inverter outline dimension drawings 162
6.3.2 Dedicated motor outline dimension drawings 170
6.4 Heatsink protrusion attachment procedure 175
6.4.1 When using a heatsink protrusion attachment (FR-A7CN) 175
6.4.2 Protrusion of heatsink of the FR-A740-160K or more 175

APPENDICES 178

Appendix 1For customers who have replaced the older model with this inverter 178
Appendix 1-1Replacement of the FR-A500 series 178
Appendix 1-2Replacement of the FR-A200 <EXCELENT> series 179
Appendix 2 Instructions for UL and cUL 180
Appendix 3 Instructions for Compliance with the European Directives 182

<Abbreviations>
DU: Operation panel (FR-DU07)
PU: Operation panel(FR-DU07) and parameter unit (FR-PU04, FR-PU07)
Inverter: Mitsubishi inverter FR-A700 series
FR-A700: Mitsubishi inverter FR-A700 series
Pr.: Parameter Number
PU operation: Operation using the PU (FR-DU07/FR-PU04/FR-PU07).
External operation: Operation using the control circuit signals
Combined operation: Combined operation using the PU (FR-DU07/FR-PU04/FR-PU07) and external operation
Standard motor: SF-JR
Constant-torque motor: SF-HRCA
Vector dedicated motor: SF-V5RU

<Trademarks>
LONWORKS® is registered trademarks of Echelon Corporation in the U.S.A. and other countries.
DeviceNet is a registered trademark of ODVA (Open DeviceNet Vender Association, Inc.).
Company and product names herein are the trademarks and registered trademarks of their respective owners.

勝 特 力 材 料 886-3-5753170
胜特力电子(上海) 86-21-34970699
胜特力电子(深圳) 86-755-83298787
Http://www.100y.com.tw

1 PRODUCT CHECKING AND PARTS IDENTIFICATION

Unpack the inverter and check the capacity plate on the front cover and the rating plate on the inverter side face to ensure that the product agrees with your order and the inverter is intact.

勝 特 力 材 料 886-3-5753170
胜特力电子(上海) 86-21-34970699
胜特力电子(深圳) 86-755-83298787
Http://www.100y.com.tw

• Inverter Type

FR - A720 - 3.7 K

Symbol	Voltage Class
A720	Three-phase 200V class
A740	Three-phase 400V class

Indicate inverter capacity (kW)

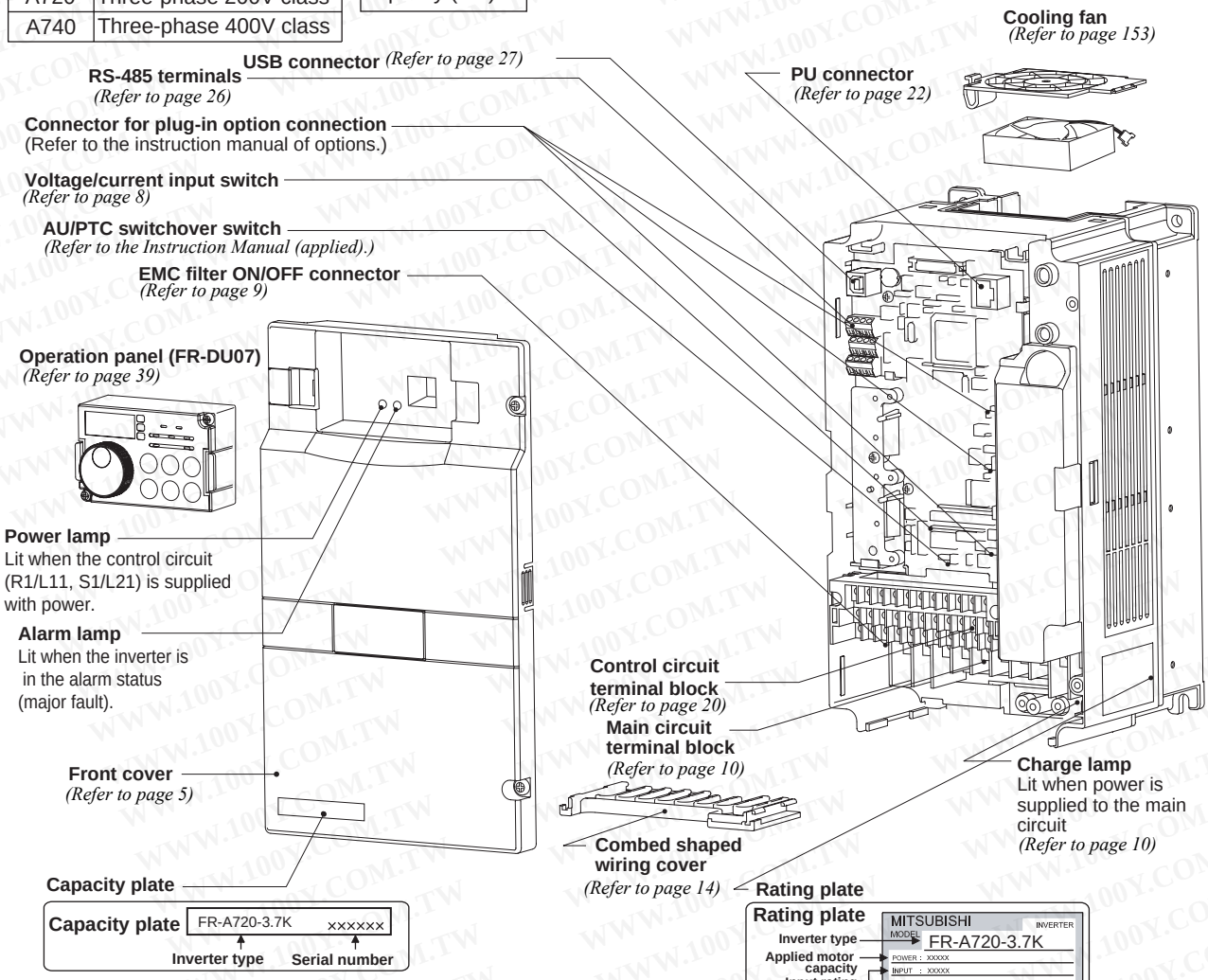

• Accessory

· **Fan cover fixing screws (22K or less)(Refer to *page 182*)**
These screws are necessary for compliance with the European Directive

	Capacity	Screw Size (mm)	Number
200V	1.5K to 3.7K	M3 × 35	1
	5.5K to 11K	M4 × 40	2
	15K to 22K	M4 × 50	1
400V	2.2K, 3.7K	M3 × 35	1
	5.5K to 15K	M4 × 40	2
	18.5K, 22K	M4 × 50	1

· **DC reactor supplied (75K or more)**

· **Eyebolt for hanging the inverter (30K to 280K)**
M8 × two pieces

REMARKS
For removal and reinstallation of covers, refer to *page 5*.

Harmonic suppression guideline
All models of general-purpose inverters used by specific consumers are covered by "Harmonic suppression guideline for consumers who receive high voltage or special high voltage". (*For further details, refer to* 📖 *Instruction Manual (applied).*)

勝 特 力 材 料 886-3-5753170
胜特力电子(上海) 86-21-34970699
胜特力电子(深圳) 86-755-83298787
Http://www.100y.com.tw

2 INSTALLATION AND WIRING

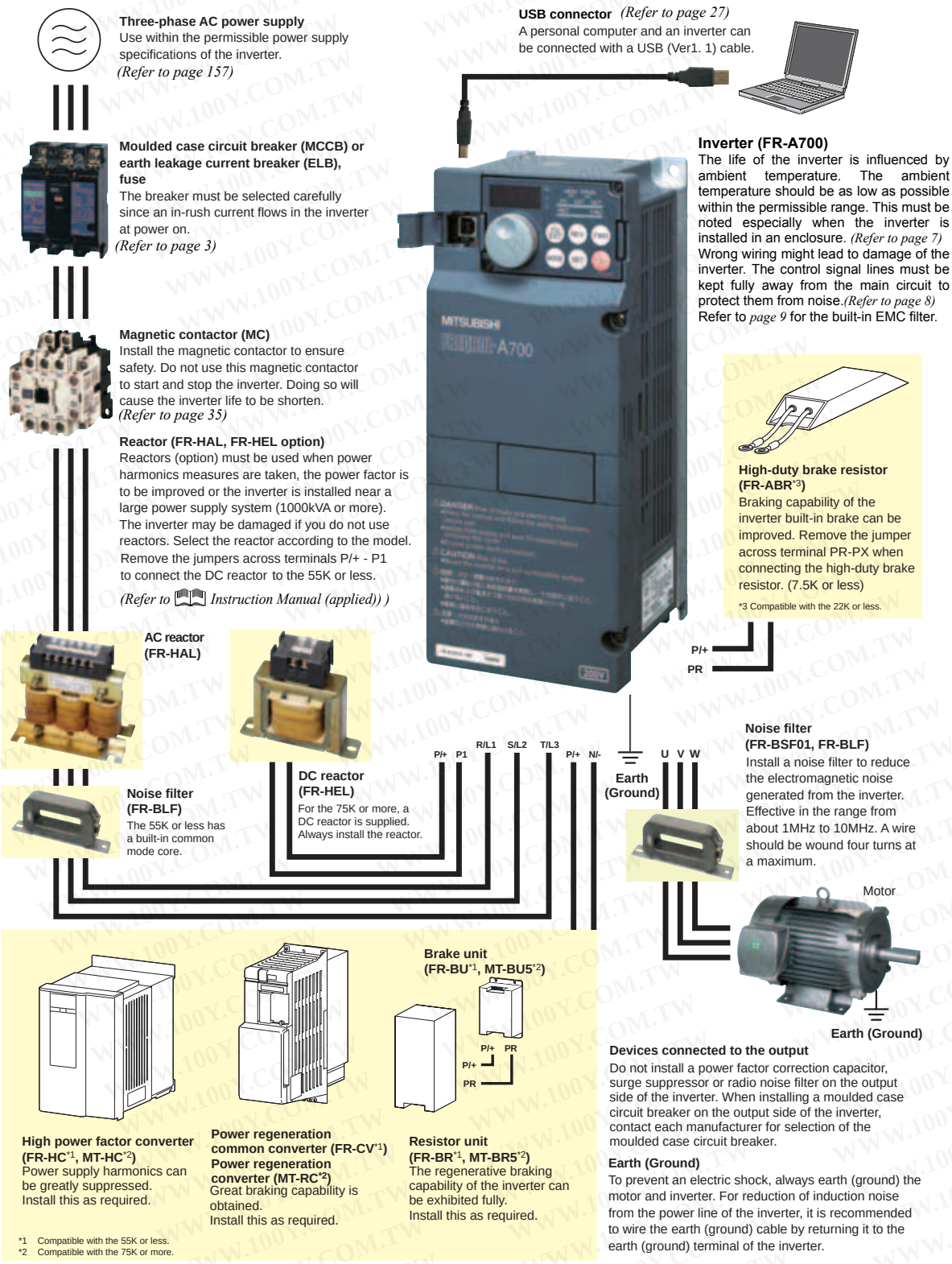

CAUTION

- Do not install a power factor correction capacitor, surge suppressor or radio noise filter on the inverter output side. This will cause the inverter to trip or the capacitor, and surge suppressor to be damaged. If any of the above devices are connected, immediately remove them.
- Electromagnetic wave interference
  The input/output (main circuit) of the inverter includes high frequency components, which may interfere with the communication devices (such as AM radios) used near the inverter. In this case, set the EMC filter valid to minimize interference.
  (Refer to Instruction Manual (applied).)
- Refer to the instruction manual of each option and peripheral devices for details of peripheral devices.

2.1 Peripheral devices

Check the motor capacity of the inverter you purchased. Appropriate peripheral devices must be selected according to the capacity. Refer to the following list and prepare appropriate peripheral devices:

200V class

Motor Output (kW)*1	Applicable Inverter Type	Breaker Selection*2,4		Input Side Magnetic Contactor*3	
		Reactor connection		Reactor connection	
		without	with	without	with
0.4	FR-A720-0.4K	30AF 5A	30AF 5A	S-N10	S-N10
0.75	FR-A720-0.75K	30AF 10A	30AF 10A	S-N10	S-N10
1.5	FR-A720-1.5K	30AF 15A	30AF 15A	S-N10	S-N10
2.2	FR-A720-2.2K	30AF 20A	30AF 15A	S-N10	S-N10
3.7	FR-A720-3.7K	30AF 30A	30AF 30A	S-N20, N21	S-N10
5.5	FR-A720-5.5K	50AF 50A	50AF 40A	S-N25	S-N20, N21
7.5	FR-A720-7.5K	100AF 60A	50AF 50A	S-N25	S-N25
11	FR-A720-11K	100AF 75A	100AF 75A	S-N35	S-N35
15	FR-A720-15K	225AF 125A	100AF 100A	S-N50	S-N50
18.5	FR-A720-18.5K	225AF 150A	225AF 125A	S-N65	S-N50
22	FR-A720-22K	225AF 175A	225AF 150A	S-N80	S-N65
30	FR-A720-30K	225AF 225A	225AF 175A	S-N95	S-N80
37	FR-A720-37K	400AF 250A	225AF 225A	S-N150	S-N125
45	FR-A720-45K	400AF 300A	400AF 300A	S-N180	S-N150
55	FR-A720-55K	400AF 400A	400AF 350A	S-N220	S-N180
75	FR-A720-75K	—	400AF 400A	—	S-N300
90	FR-A720-90K	—	400AF 400A	—	S-N300

*1 Selections for use of the Mitsubishi 4-pole standard motor with power supply voltage of 200VAC 50Hz.

*2 Select the MCCB according to the inverter power supply capacity.
Install one MCCB per inverter.
For installations in the United States or Canada, use the fuse certified by the UL and cUL.
(Refer to page 180.)

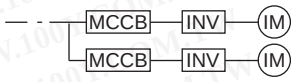

*3 Magnetic contactor is selected based on the AC-1 class. The electrical durability of magnetic contactor is 500,000 times. When the magnetic contactor is used for emergency stop during motor driving, the electrical durability is 25 times.
When using the MC for emergency stop during motor driving or using on the motor side during commercial-power supply operation, select the MC with class AC-3 rated current for the motor rated current.

*4 When the breaker on the inverter primary side trips, check for the wiring fault (short circuit), damage to internal parts of the inverter, etc. Identify the cause of the trip, then remove the cause and power on the breaker.

勝 特 力 材 料 886-3-5753170
胜特力电子(上海) 86-21-34970699
胜特力电子(深圳) 86-755-83298787
Http://www.100y.com.tw

400V class

Motor Output (kW)*1	Applicable Inverter Type	Breaker Selection*2,4		Input Side Magnetic Contactor*3	
		Reactor connection		Reactor connection	
		without	with	without	with
0.4	FR-A740-0.4K	30AF 5A	30AF 5A	S-N10	S-N10
0.75	FR-A740-0.75K	30AF 5A	30AF 5A	S-N10	S-N10
1.5	FR-A740-1.5K	30AF 10A	30AF 10A	S-N10	S-N10
2.2	FR-A740-2.2K	30AF 10A	30AF 10A	S-N10	S-N10
3.7	FR-A740-3.7K	30AF 20A	30AF 15A	S-N10	S-N10
5.5	FR-A740-5.5K	30AF 30A	30AF 20A	S-N20	S-N11, N12
7.5	FR-A740-7.5K	30AF 30A	30AF 30A	S-N20	S-N20
11	FR-A740-11K	50AF 50A	50AF 40A	S-N20	S-N20
15	FR-A740-15K	100AF 60A	50AF 50A	S-N25	S-N20
18.5	FR-A740-18.5K	100AF 75A	100AF 60A	S-N25	S-N25
22	FR-A740-22K	100AF 100A	100AF 75A	S-N35	S-N25
30	FR-A740-30K	225AF 125A	100AF 100A	S-N50	S-N50
37	FR-A740-37K	225AF 150A	225AF 125A	S-N65	S-N50
45	FR-A740-45K	225AF 175A	225AF 150A	S-N80	S-N65
55	FR-A740-55K	225AF 200A	225AF 175A	S-N80	S-N80
75	FR-A740-75K	—	225AF 225A	—	S-N95
90	FR-A740-90K	—	225AF 225A	—	S-N150
110	FR-A740-110K	—	225AF 225A	—	S-N180
132	FR-A740-132K	—	400AF 400A	—	S-N220
150	FR-A740-160K	—	400AF 400A	—	S-N300
160	FR-A740-160K	—	400AF 400A	—	S-N300
185	FR-A740-185K	—	400AF 400A	—	S-N300
220	FR-A740-220K	—	600AF 500A	—	S-N400
250	FR-A740-250K	—	600AF 600A	—	S-N600
280	FR-A740-280K	—	600AF 600A	—	S-N600
315	FR-A740-315K	—	800AF 700A	—	S-N600
355	FR-A740-355K	—	800AF 800A	—	S-N600
400	FR-A740-400K	—	1000AF 900A	—	S-N800
450	FR-A740-450K	—	1000AF 1000A	—	1000A Rated product
500	FR-A740-500K	—	1200AF 1200A	—	1000A Rated product

*1 Selections for use of the Mitsubishi 4-pole standard motor with power supply voltage of 400VAC 50Hz.

*2 Select the MCCB according to the inverter power supply capacity.
Install one MCCB per inverter.
For installations in the United States or Canada, use the fuse certified by the UL and cUL.
(Refer to page 180.)

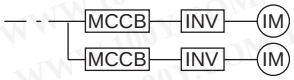

*3 Magnetic contactor is selected based on the AC-1 class. The electrical durability of magnetic contactor is 500,000 times. When the magnetic contactor is used for emergency stop during motor driving, the electrical durability is 25 times.
When using the MC for emergency stop during motor driving or using on the motor side during commercial-power supply operation, select the MC with class AC-3 rated current for the motor rated current.

*4 When the breaker on the inverter primary side trips, check for the wiring fault (short circuit), damage to internal parts of the inverter, etc. Identify the cause of the trip, then remove the cause and power on the breaker.

勝 特 力 材 料 886-3-5753170
胜特力电子(上海) 86-21-34970699
胜特力电子(深圳) 86-755-83298787
Http://www.100y.com.tw

2.2 Method of removal and reinstallation of the front cover

•Removal of the operation panel

1) Loosen the two screws on the operation panel. (These screws cannot be removed.)

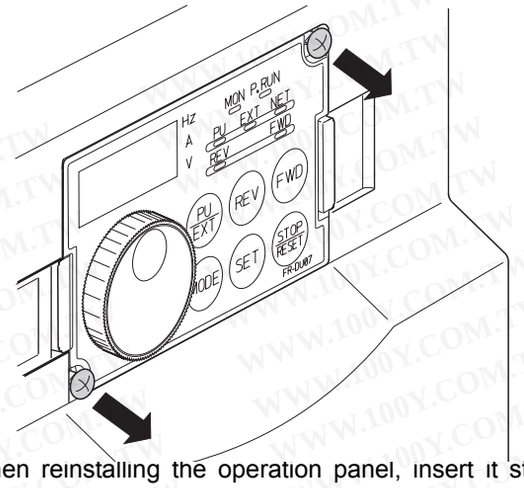

2) Push the left and right hooks of the operation panel and pull the operation panel toward you to remove.

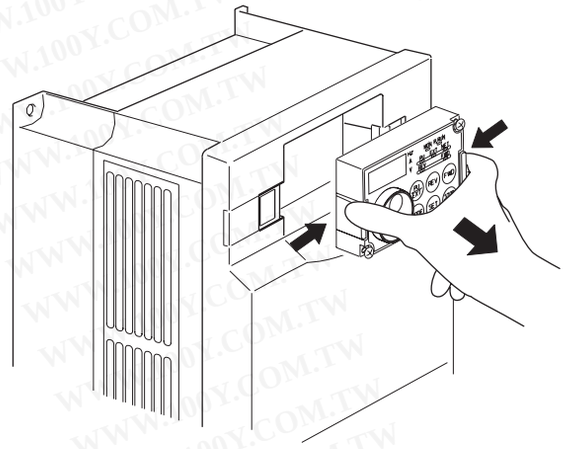

When reinstalling the operation panel, insert it straight to reinstall securely and tighten the fixed screws of the operation panel.

FR-A720-0.4K to 22K, FR-A740-0.4K to 22K

•Removal

1) Loosen the installation screws of the front cover.

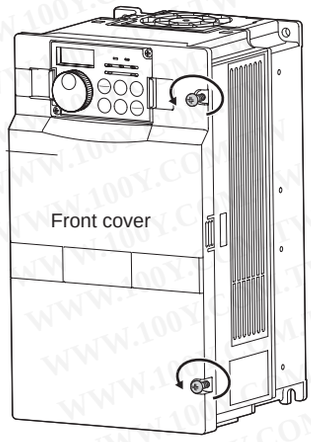

2) Pull the front cover toward you to remove by pushing an installation hook using left fixed hooks as supports.

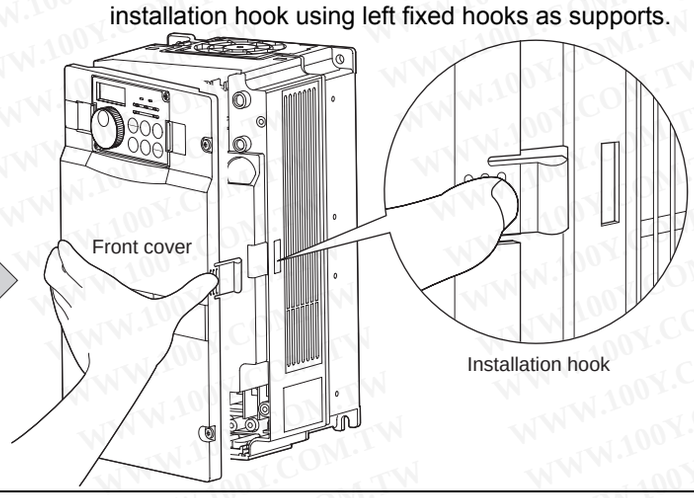

•Reinstallation

1) Insert the two fixed hooks on the left side of the front cover into the sockets of the inverter.

2) Using the fixed hooks as supports, securely press the front cover against the inverter. (Although installation can be done with the operation panel mounted, make sure that a connector is securely fixed.)

3) Tighten the installation screws and fix the front cover.

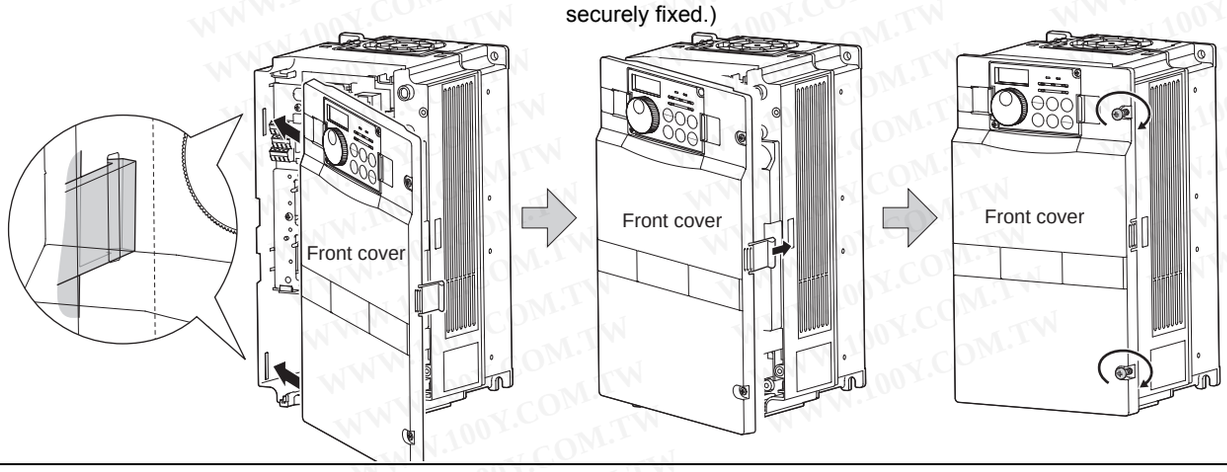

勝 特 力 材 料 886-3-5753170
胜特力电子(上海) 86-21-34970699
胜特力电子(深圳) 86-755-83298787
Http://www.100y.com.tw

勝 特 力 材 料 886-3-5753170
胜特力电子(上海) 86-21-34970699
胜特力电子(深圳) 86-755-83298787
Http://www.100y.com.tw

FR-A720-30K or more, FR-A740-30K or more

•Removal

1) Remove installation screws on the front cover 1 to remove the front cover 1.
2) Loosen the installation screws of the front cover 2.
3) Pull the front cover 2 toward you to remove by pushing an installation hook on the right side using left fixed hooks as supports.

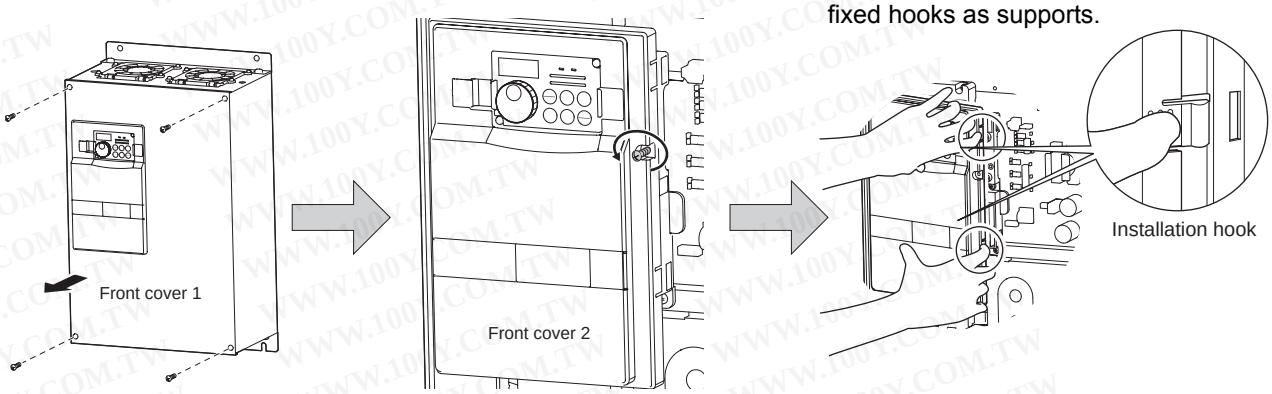

•Reinstallation

1) Insert the two fixed hooks on the left side of the front cover 2 into the sockets of the inverter.
2) Using the fixed hooks as supports, securely press the front cover 2 against the inverter. (Although installation can be done with the operation panel mounted, make sure that a connector is securely fixed.)

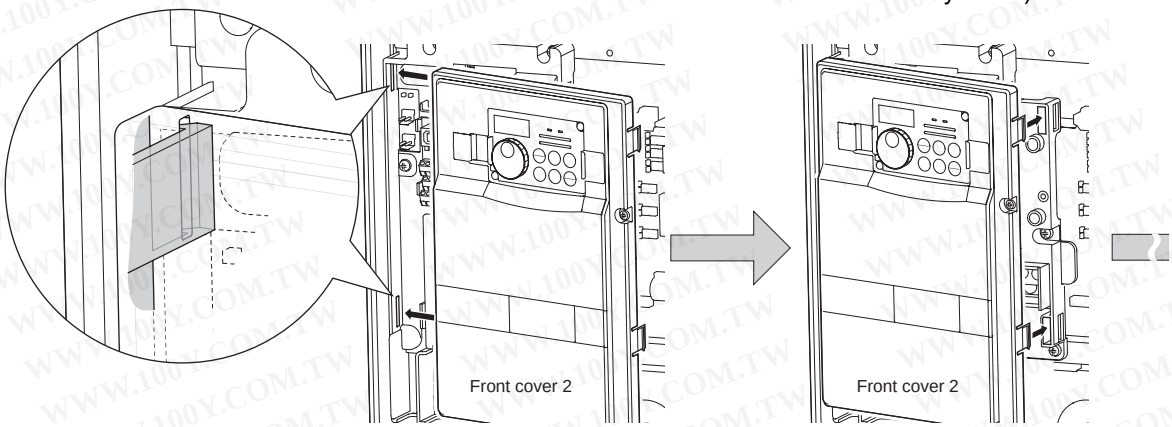

3) Fix the front cover 2 with the installation screws.
4) Fix the front cover 1 with the installation screws.

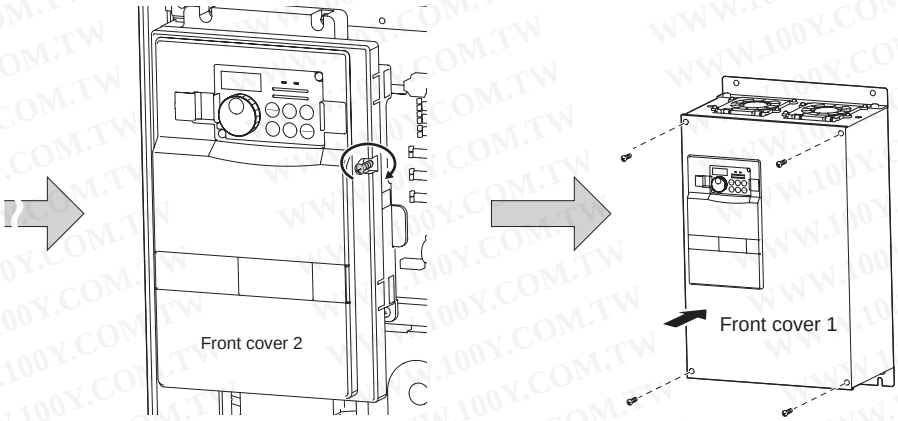

REMARKS

- For the FR-A720-55Kand the 160K or more, the front cover 1 is separated into two parts.

CAUTION

1. Fully make sure that the front cover has been reinstalled securely. Always tighten the installation screws of the front cover.
2. The same serial number is printed on the capacity plate of the front cover and the rating plate of the inverter. Before reinstalling the front cover, check the serial numbers to ensure that the cover removed is reinstalled to the inverter from where it was removed.

2.3 Installation of the inverter and instructions

- Installation of the Inverter

Installation on the enclosure

0.4K to 22K **30K or more**

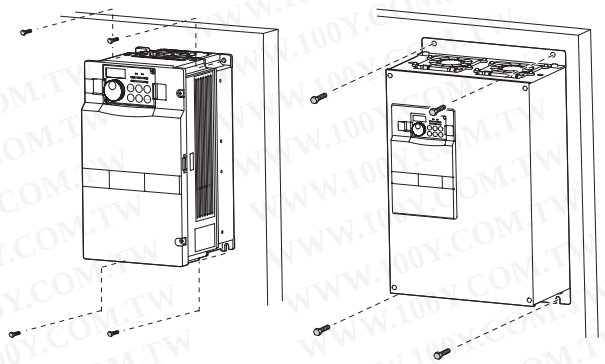

Fix six positions for the FR-A740-160K to 355K and fix eight positions for the FR-A740-400K to 500K.

CAUTION

- When encasing multiple inverters, install them in parallel as a cooling measure.
- Install the inverter vertically.

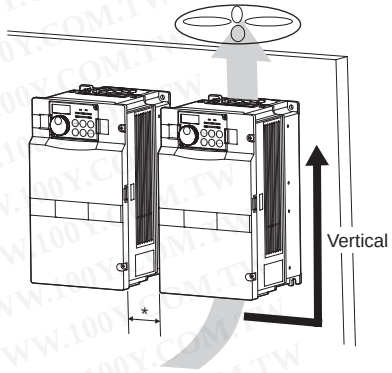

* Refer to the clearances below.

- Install the inverter under the following conditions.

Ambient temperature and humidity

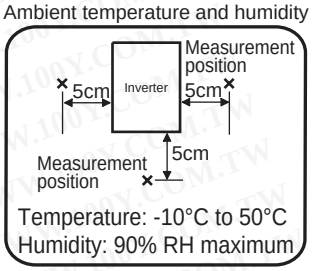

Leave enough clearances and take cooling measures.

Clearances (Front)

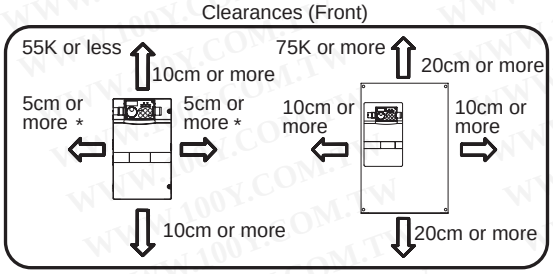

*1cm or more for 3.7K or less

Clearances (Side)

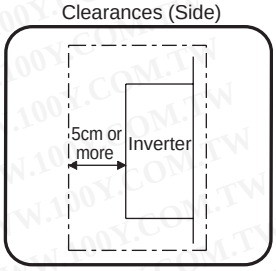

REMARKS

For replacing the cooling fan of the FR-A740-160K or more, 30cm of space is necessary in front of the inverter. Refer to *page 153* for fan replacement.

- The inverter consists of precision mechanical and electronic parts. Never install or handle it in any of the following conditions as doing so could cause an operation fault or failure.

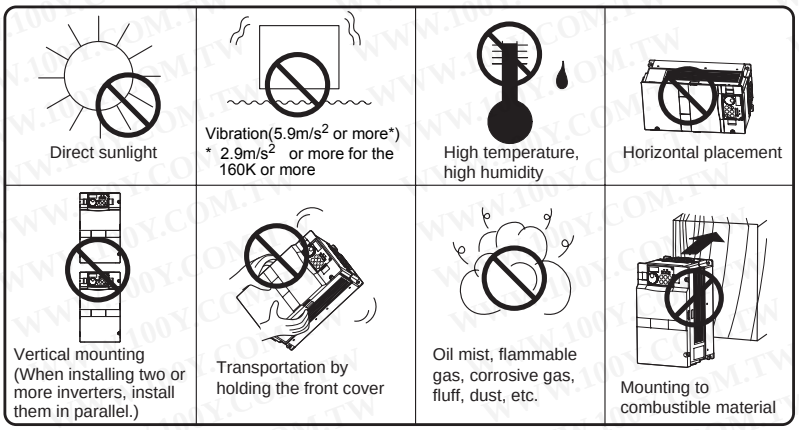

勝 特 力 材 料 886-3-5753170
胜特力电子(上海) 86-21-34970699
胜特力电子(深圳) 86-755-83298787
Http://www.100y.com.tw

勝 特 力 材 料 886-3-5753170
胜特力电子(上海) 86-21-34970699
胜特力电子(深圳) 86-755-83298787
Http://www.100y.com.tw

2.4 Wiring

2.4.1 Terminal connection diagram

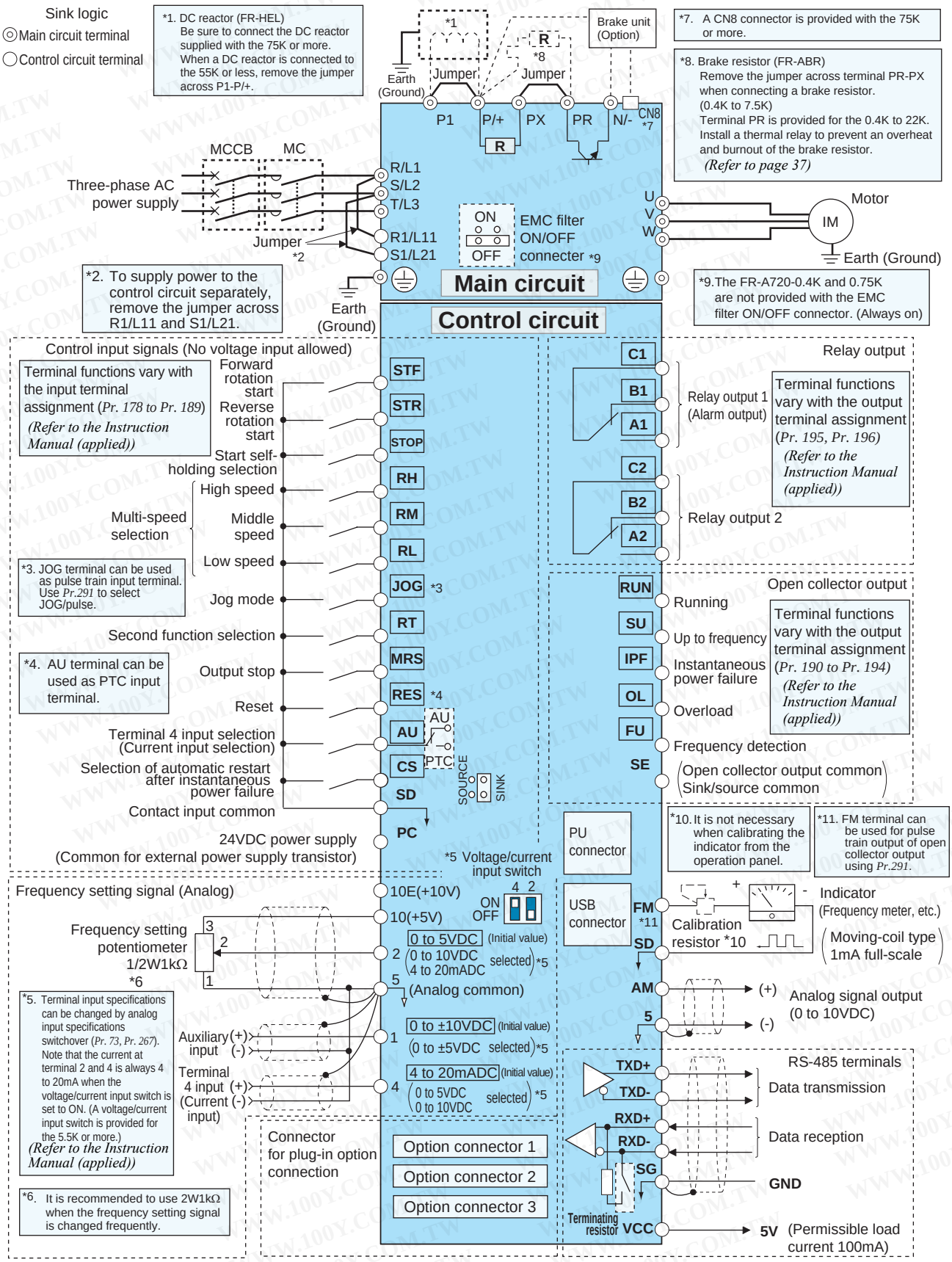

CAUTION

- To prevent a malfunction due to noise, keep the signal cables more than 10cm away from the power cables.
- After wiring, wire offcuts must not be left in the inverter.
  Wire offcuts can cause an alarm, failure or malfunction. Always keep the inverter clean.
  When drilling mounting holes in an enclosure etc., take care not to allow chips and other foreign matter to enter the inverter.

2.4.2 EMC filter

勝 特 力 材 料 886-3-5753170
胜特力电子(上海) 86-21-34970699
胜特力电子(深圳) 86-755-83298787
Http://www.100y.com.tw

The inverter is equipped with a built-in EMC filter.
Effective for reduction of air-propagated noise on the input side of the inverter.
The EMC filter is factory-set to disable (OFF).
To enable it, fit the EMC filter ON/OFF connector to the ON position.

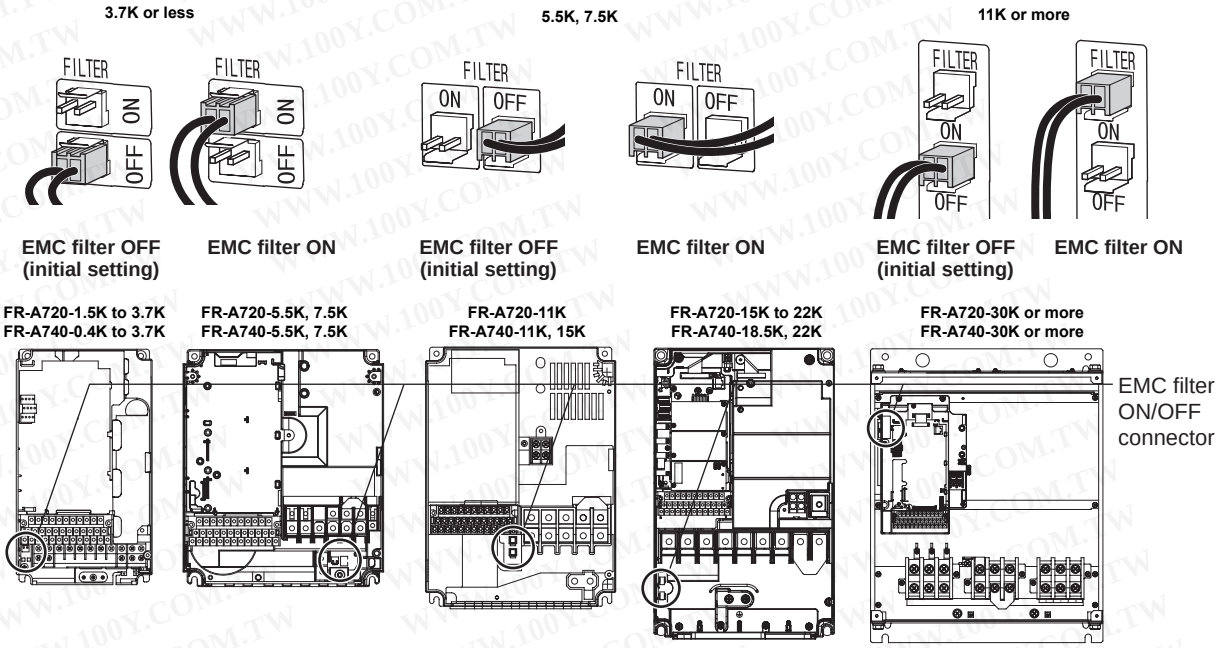

The FR-A720-0.4K and 0.75K are not provided with the EMC filter ON/OFF connector. (The EMC filter is always valid.)

<How to disconnect the connector>

(1) Before removing a front cover, check to make sure that the indication of the inverter operation panel is off, wait for at least 10 minutes after the power supply has been switched off, and check that there are no residual voltage using a tester or the like. (*Refer to page 5.*)

(2) When disconnecting the connector, push the fixing tab and pull the connector straight without pulling the cable or forcibly pulling the connector with the tab fixed. When installing the connector, also engage the fixing tab securely. If it is difficult to disconnect the connector, use a pair of long-nose pliers, etc.

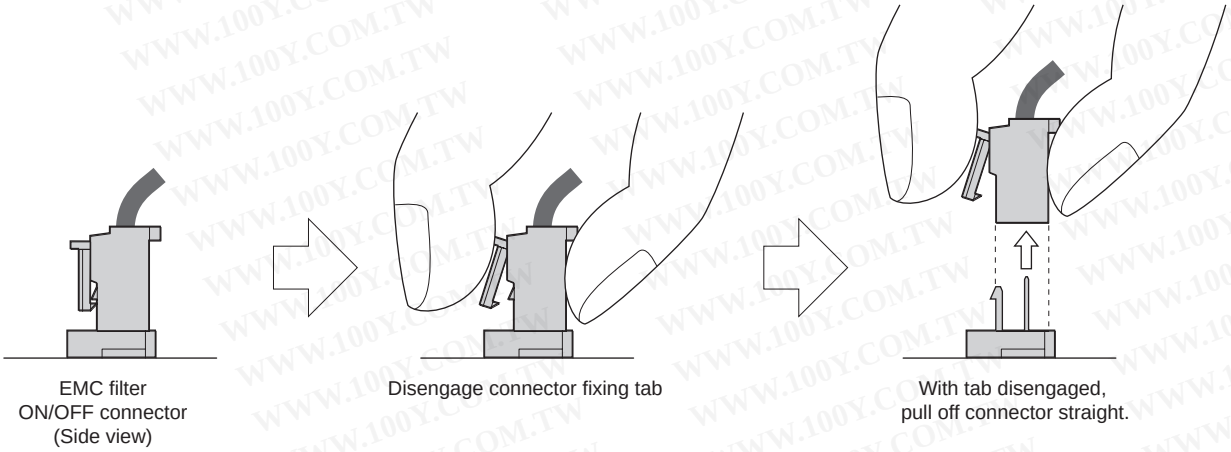

CAUTION

- Fit the connector to either ON or OFF.
- Enabling (turning on) the EMC filter increase leakage current. *(Refer to Instruction Manual (applied))*

⚠ WARNING

While power is on or when the inverter is running, do not open the front cover. Otherwise you may get an electric shock.

勝 特 力 材 料 886-3-5753170
胜特力电子(上海) 86-21-34970699
胜特力电子(深圳) 86-755-83298787
Http://www.100y.com.tw

2.4.3 Specification of main circuit terminal

Terminal Symbol	Terminal Name	Description
R/L1, S/L2, T/L3	AC power input	Connect to the commercial power supply. Keep these terminals open when using the high power factor converter (FR-HC and MT-HC) or power regeneration common converter (FR-CV).
U, V, W	Inverter output	Connect a three-phase squirrel-cage motor.
R1/L11, S1/L21	Power supply for control circuit	Connected to the AC power supply terminals R/L1 and S/L2. To retain the alarm display and alarm output or when using the high power factor converter (FR-HC and MT-HC) or power regeneration common converter (FR-CV), remove the jumpers from terminals R/L1-R1/L11 and S/L2-S1/L21 and apply external power to these terminals. Do not turn off the power supply for control circuit (R1/L11, S1/L21) with the main circuit power (R/L1, S/L2, T/L3) on. Doing so may damage the inverter. The circuit should be configured so that the main circuit power (R/L1, S/L2, T/L3) is also turned off when the power supply for control circuit (R1/L11, S1/L21) is off. 15K or less : 60VA, 18.5K or more : 80VA
P/+, PR	Brake resistor connection	Remove the jumper from terminals PR-PX (7.5K or less) and connect an optional brake resistor (FR-ABR) across terminals P/+-PR. For the 22K or less, connecting the resistor further provides regenerative braking power.
P/+, N/-	Brake unit connection	Connect the brake unit (FR-BU, BU and MT-BU5), power regeneration common converter (FR-CV), high power factor converter (FR-HC and MT-HC) or power regeneration converter (MT-RC).
P/+, P1	DC reactor connection	For the 55K or less, remove the jumper across terminals P/+ - P1 and connect the DC reactor. (For the 75K or more, a DC reactor is supplied as standard.)
PR, PX	Built-in brake circuit connection	When the jumper is connected across terminals PX-PR (initial status), the built-in brake circuit is valid. (Provided for the 7.5K or less.)
⏚	Earth (ground)	For earthing (grounding) the inverter chassis. Must be earthed (grounded).

CAUTION

- When connecting a dedicated brake resistor (FR-ABR) and brake unit (FR-BU, BU) remove jumpers across terminals PR-PX (7.5K or less). For details, refer to *Instruction Manual (applied)*.

2.4.4 Terminal arrangement of the main circuit terminal, power supply and the motor wiring.

200V class

FR-A720-0.4K, 0.75K

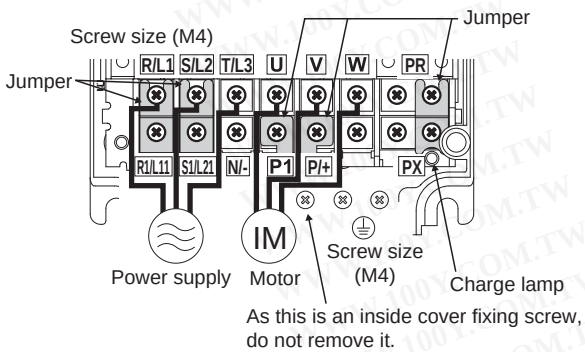

FR-A720-1.5K, 2.2K, 3.7K

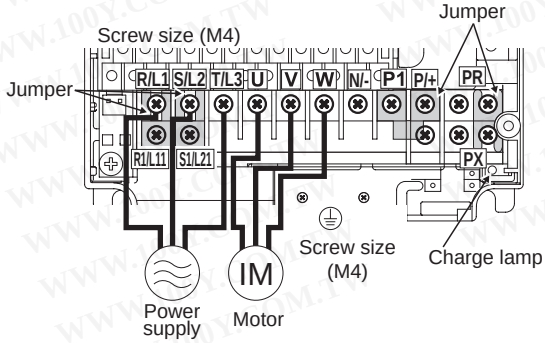

FR-A720-5.5K, 7.5K

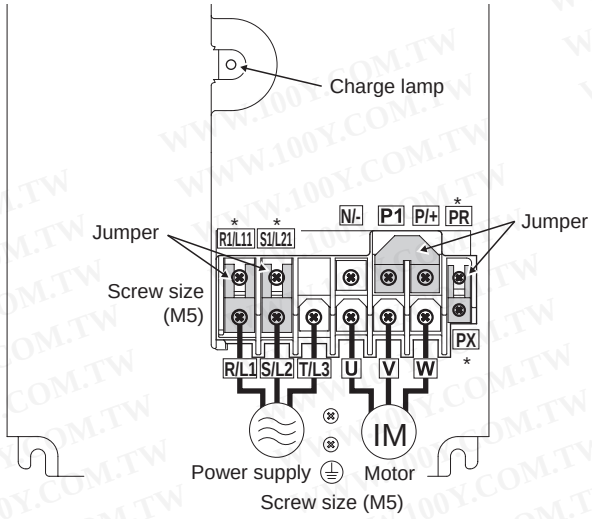

* Screw size of terminal R1/L11, S1/L21, PR, and PX is M4.

FR-A720-11K

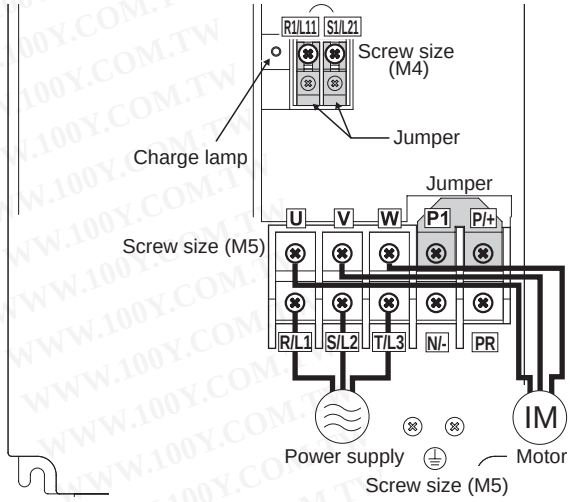

FR-A720-15K, 18.5K, 22K

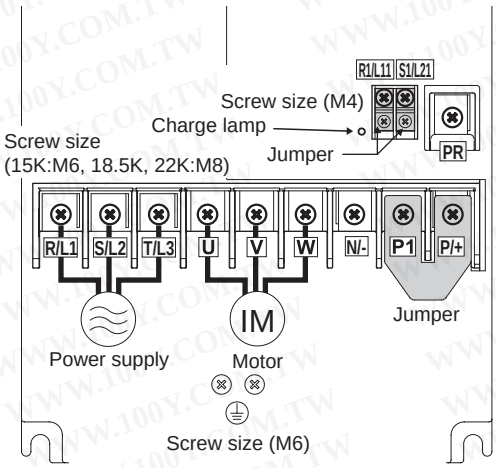

FR-A720-30K, 37K, 45K

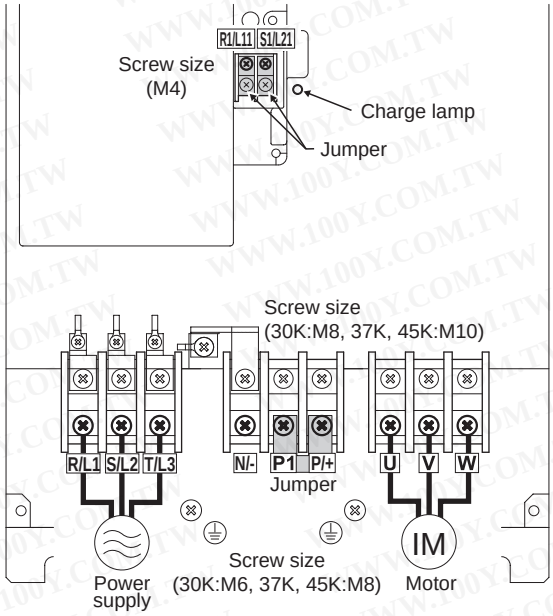

FR-A720-55K

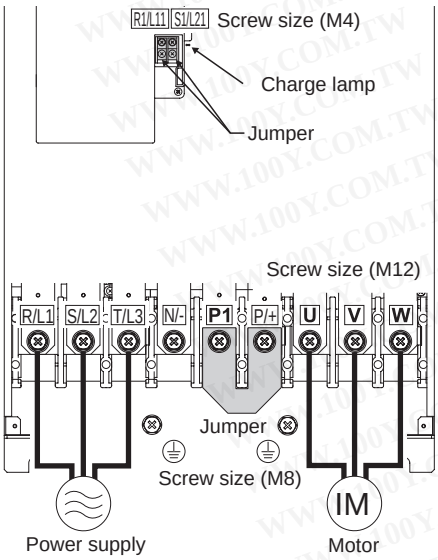

FR-A720-75K, 90K

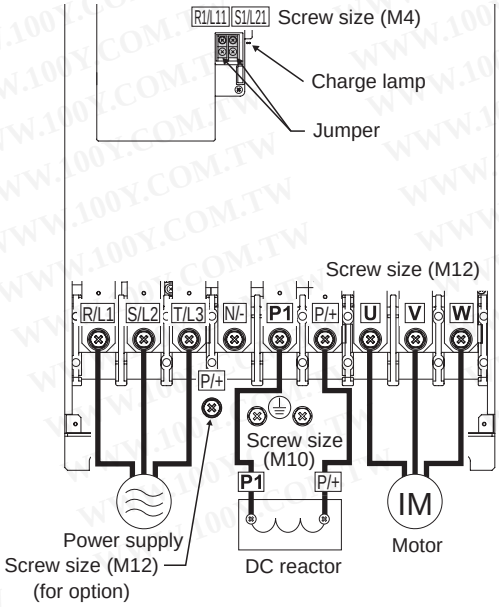

勝 特 力 材 料 886-3-5753170
胜特力电子(上海) 86-21-34970699
胜特力电子(深圳) 86-755-83298787
Http://www.100y.com.tw

400V class

FR-A740-0.4K to 3.7K

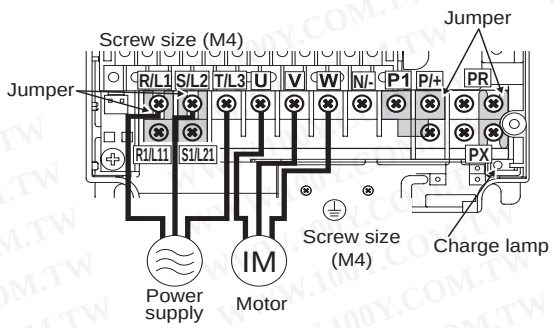

FR-A740-5.5K, 7.5K

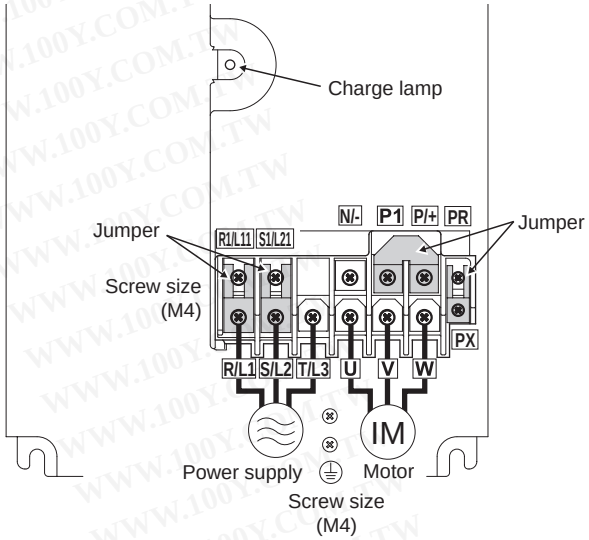

FR-A740-11K, 15K

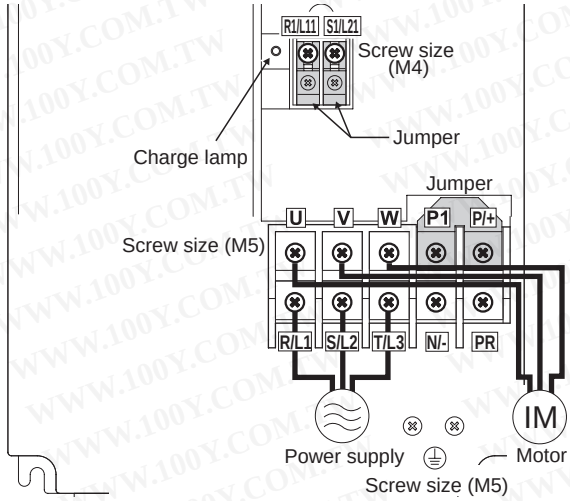

FR-A740-18.5K, 22K

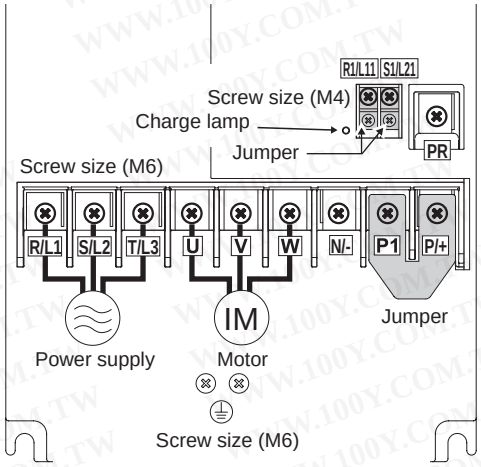

FR-A740-30K to 45K

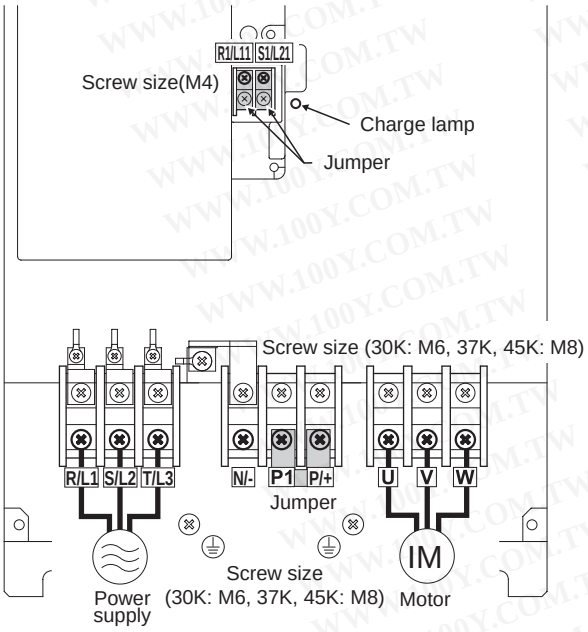

FR-A740-55K

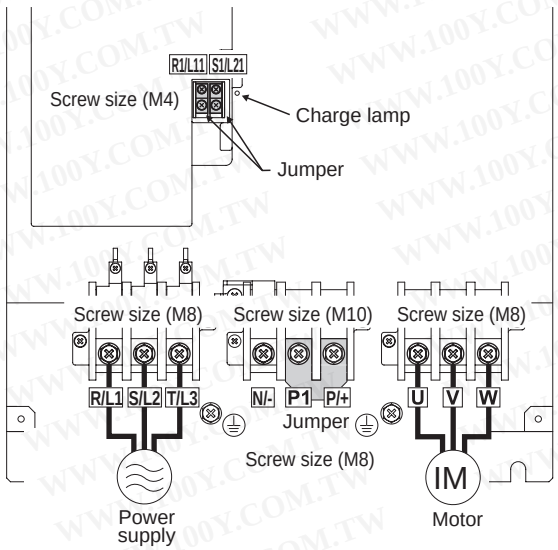

勝 特 力 材 料 886-3-5753170
胜特力电子(上海) 86-21-34970699
胜特力电子(深圳) 86-755-83298787
Http://www.100y.com.tw

FR-A740-75K, 90K

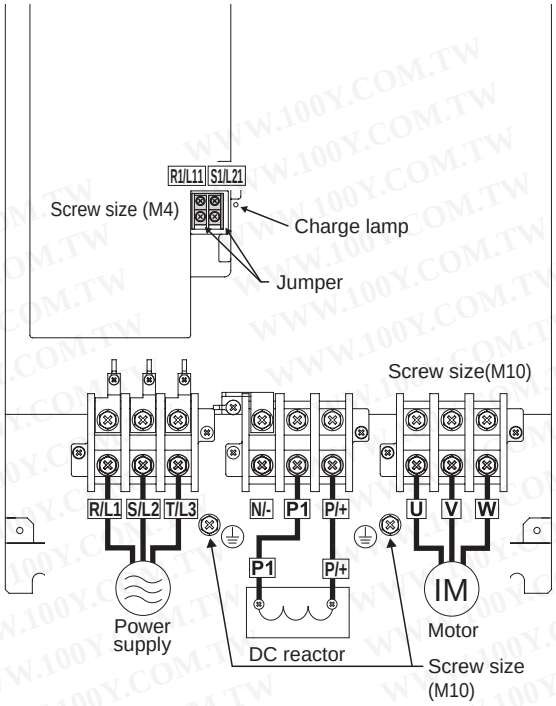

FR-A740-110K, 132K

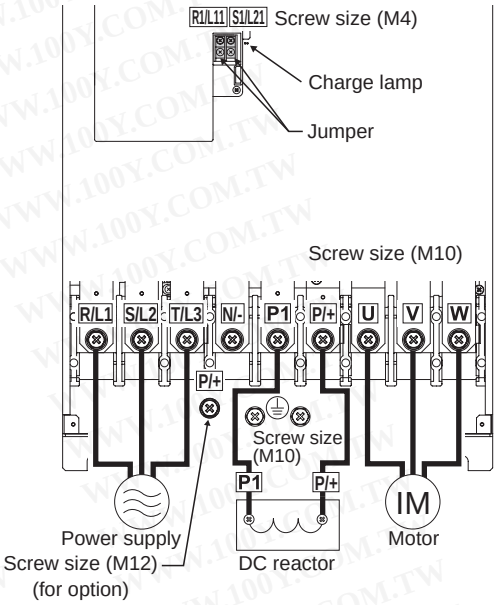

FR-A740-160K, 185K

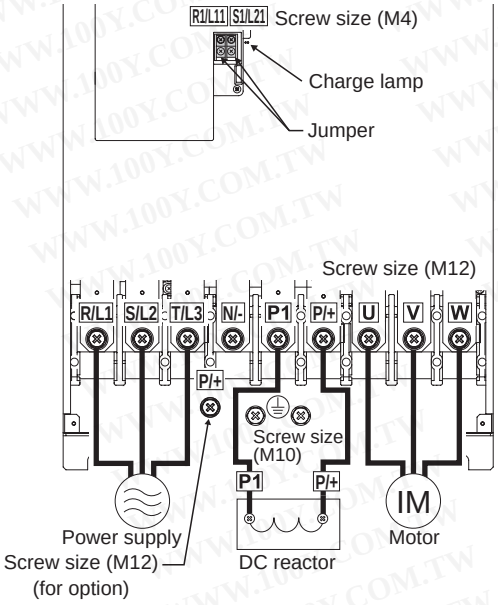

FR-A740-220K to 500K

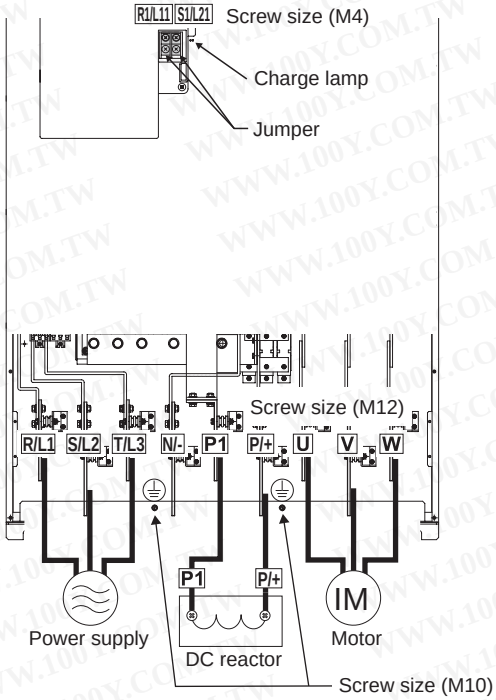

勝 特 力 材 料 886-3-5753170
胜特力电子(上海) 86-21-34970699
胜特力电子(深圳) 86-755-83298787
Http://www.100y.com.tw

CAUTION

- The power supply cables must be connected to R/L1, S/L2, T/L3. Never connect the power cable to the U, V, W of the inverter. Doing so will damage the inverter. (Phase sequence needs not to be matched.)
- Connect the motor to U, V, W. At this time, turning on the forward rotation switch (signal) rotates the motor in the counterclockwise direction when viewed from the motor shaft.
- When wiring the inverter main circuit conductor of the FR-F740-220K or more, tighten a nut from the right side of the conductor. When wiring two wires, place wires on both sides of the conductor. (Refer to the drawing below.) For wiring, use bolts (nuts) provided with the inverter.

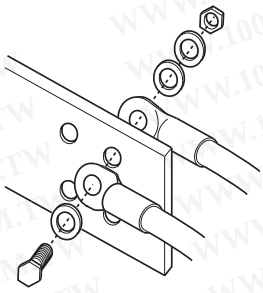

- Handling of the wiring cover
  (FR-A720-15K, 18.5K, 22K, FR-A740-18.5K, 22K)
  For the hook of the wiring cover, cut off the necessary parts using a pair of long-nose pliers etc.

CAUTION

Cut off the same number of lugs as wires. If parts where no wire is put through has been cut off (10mm or more), protective structure (JEM1030) becomes an open type (IP00).

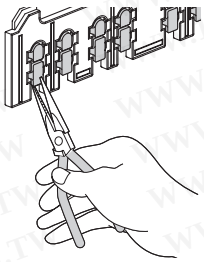

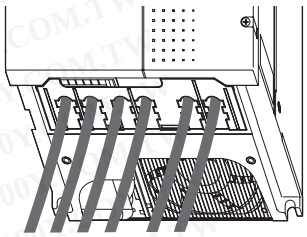

勝 特 力 材 料 886-3-5753170
胜特力电子(上海) 86-21-34970699
胜特力电子(深圳) 86-755-83298787
Http://www.100y.com.tw

(1) Cable sizes etc., of the main control circuit terminals and earth (ground) terminals

Select the recommended cable size to ensure that a voltage drop will be 2% max.
If the wiring distance is long between the inverter and motor, a main circuit cable voltage drop will cause the motor torque to decrease especially at the output of a low frequency.
The following table indicates a selection example for the wiring length of 20m.

200V class (when input power supply is 220V)

Applicable Inverter Type	Terminal Screw Size *4	Tightening Torque N·m	Crimping Terminal		Cable Sizes								
					HIV, etc. (mm^2) *1				AWG/MCM *2		PVC, etc. (mm^2) *3		
			R/L1, S/L2, T/L3	U, V, W	R/L1, S/L2, T/L3	U, V, W	P/+, P1	Earth (Ground) cable	R/L1, S/L2, T/L3	U, V, W	R/L1, S/L2, T/L3	U, V, W	Earth (Ground) cable
FR-A720-0.4K to 2.2K	M4	1.5	2-4	2-4	2	2	2	2	14	14	2.5	2.5	2.5
FR-A720-3.7K	M4	1.5	5.5-4	5.5-4	3.5	3.5	3.5	3.5	12	12	4	4	4
FR-A720-5.5K	M4/M5	2.5	5.5-5	5.5-5	5.5	5.5	5.5	5.5	10	10	6	6	6
FR-A720-7.5K	M4/M5	2.5	14-5	8-5	14	8	14	14	6	8	16	10	16
FR-A720-11K	M5	2.5	14-5	14-5	14	14	14	14	6	6	16	16	16
FR-A720-15K	M6	4.4	22-6	22-6	22	22	22	14	4	4	25	25	16
FR-A720-18.5K	M8/M6	7.8	38-8	38-8	38	38	38	22	2	2	35	35	25
FR-A720-22K	M8/M6	7.8	38-8	38-8	38	38	38	22	2	2	35	35	25
FR-A720-30K	M8/M6	7.8	60-8	60-8	60	60	60	38	1/0	1/0	50	50	25
FR-A720-37K	M10/M8	14.7	80-10	80-10	80	80	80	38	3/0	3/0	70	70	35
FR-A720-45K	M10/M8	14.7	100-10	100-10	100	100	100	60	4/0	4/0	95	95	50
FR-A720-55K	M12/M8	24.5	100-12	100-12	100	100	100	60	4/0	4/0	95	95	50
FR-A720-75K	M12/M10	24.5	150-12	150-12	125	125	125	38	250	250	—	—	—
FR-A720-90K	M12/M10	24.5	150-12	150-12	150	150	150	60	300	300	—	—	—

*1 For the 55K or less, the cable size is that of the cable (HIV cable (600V class 2 vinyl-insulated cable) etc.) with continuous maximum permissible temperature of 75°C. Assumes that the ambient temperature is 50°C or less and the wiring distance is 20m or less.
For the 75K or more, the recommended cable size is that of the cable (LMFC (heat resistant flexible cross-linked polyethylene insulated cable) etc.) with continuous maximum permissible temperature of 90°C. Assumes that the ambient temperature is 50°C or less and wiring is performed in an enclosure.

*2 The recommended cable size is that of the cable (THHW cable) with continuous maximum permissible temperature of 75°C. Assumes that the ambient temperature is 40°C or less and the wiring distance is 20m or less.
(Selection example for use mainly in the United States.)

*3 For the 15K or less, the recommended cable size is that of the cable (PVC cable) with continuous maximum permissible temperature of 70°C. Assumes that the ambient temperature is 40°C or less and the wiring distance is 20m or less.
For the 18.5K or more, the recommended cable size is that of the cable (XLPE cable) with continuous maximum permissible temperature of 90°C. Assumes that the ambient temperature is 40°C or less and wiring is performed in an enclosure.
(Selection example for use mainly in Europe.)

*4 The terminal screw size indicates the terminal size for R/L1, S/L2, T/L3, U, V, W, and a screw for earthing (grounding). For the 5.5K and 7.5K, screw sizes are different (R1/L11, S1/L21, PR, PX / R/L1, S/L2, T/L3, U, V, W, a screw for earthing (grounding)). For the 18.5K or more, screw sizes are different. (R/L1, S/L2, T/L3, U, V, W / a screw for earthing (grounding))

勝 特 力 材 料 886-3-5753170
胜特力电子(上海) 86-21-34970699
胜特力电子(深圳) 86-755-83298787
Http://www.100y.com.tw

400V class (when input power supply is 440V)

Applicable Inverter Type	Terminal Screw Size *4	Tightening Torque N·m	Crimping Terminal		Cable Sizes								
					HIV, etc. (mm^2) *1				AWG/MCM *2		PVC, etc. (mm^2) *3		
			R/L1, S/L2, T/L3	U, V, W	R/L1, S/L2, T/L3	U, V, W	P/+, P1	Earth (Ground) Cable	R/L1, S/L2, T/L3	U, V, W	R/L1, S/L2, T/L3	U, V, W	Earth (Ground) Cable
FR-A740-0.4K to 3.7K	M4	1.5	2-4	2-4	2	2	2	2	14	14	2.5	2.5	2.5
FR-A740-5.5K	M4	1.5	2-4	2-4	2	2	3.5	3.5	12	14	2.5	2.5	4
FR-A740-7.5K	M4	1.5	5.5-4	5.5-4	3.5	3.5	3.5	3.5	12	12	4	4	4
FR-A740-11K	M5	2.5	5.5-5	5.5-5	5.5	5.5	5.5	8	10	10	6	6	10
FR-A740-15K	M5	2.5	8-5	8-5	8	8	8	8	8	8	10	10	10
FR-A740-18.5K	M6	4.4	14-6	8-6	14	8	14	14	6	8	16	10	16
FR-A740-22K	M6	4.4	14-6	14-6	14	14	22	14	6	6	16	16	16
FR-A740-30K	M6	4.4	22-6	22-6	22	22	22	14	4	4	25	25	16
FR-A740-37K	M8	7.8	22-8	22-8	22	22	22	14	4	4	25	25	16
FR-A740-45K	M8	7.8	38-8	38-8	38	38	38	22	1	2	50	50	25
FR-A740-55K	M8	7.8	60-8	60-8	60	60	60	22	1/0	1/0	50	50	25
FR-A740-75K	M10	14.7	60-10	60-10	60	60	60	38	1/0	1/0	50	50	25
FR-A740-90K	M10	14.7	60-10	60-10	60	60	80	38	3/0	3/0	50	50	25
FR-A740-110K	M10/M12	14.7	80-10	80-10	80	80	80	38	3/0	3/0	70	70	35
FR-A740-132K	M10/M12	14.7	100-10	100-10	100	100	100	38	4/0	4/0	95	95	50
FR-A740-160K	M12/M10	24.5	150-12	150-12	125	150	150	38	250	250	120	120	70
FR-A740-185K	M12/M10	24.5	150-12	150-12	150	150	150	38	300	300	150	150	95
FR-A740-220K	M12/M10	24.5	100-12	100-12	2×100	2×100	2×100	60	2×4/0	2×4/0	2×95	2×95	95
FR-A740-250K	M12/M10	24.5	100-12	100-12	2×100	2×100	2×125	60	2×4/0	2×4/0	2×95	2×95	95
FR-A740-280K	M12/M10	24.5	150-12	150-12	2×125	2×125	2×125	60	2×250	2×250	2×120	2×120	120
FR-A740-315K	M12/M10	24.5	150-12	150-12	2×150	2×150	2×150	100	2×300	2×300	2×150	2×150	150
FR-A740-355K	M12/M10	24.5	C2-200	C2-200	2×200	2×200	2×200	100	2×350	2×350	2×185	2×185	2×95
FR-A740-400K	M12/M10	24.5	C2-200	C2-200	2×200	2×200	2×200	100	2×400	2×400	2×185	2×185	2×95
FR-A740-450K	M12/M10	24.5	C2-250	C2-200	2×250	2×250	2×250	100	2×500	2×500	2×240	2×240	2×120
FR-A740-500K	M12/M10	24.5	C2-200	C2-250	3×200	2×250	3×200	2×100	2×500	2×500	2×240	2×240	2×120

*1 For the 55K or less, the cable size is that of the cable (HIV cable (600V class 2 vinyl-insulated cable) etc.) with continuous maximum permissible temperature of 75°C. Assumes that the ambient temperature is 50°C or less and the wiring distance is 20m or less.
For the 75K or more, the recommended cable size is that of the cable (LMFC (heat resistant flexible cross-linked polyethylene insulated cable) etc.) with continuous maximum permissible temperature of 90°C. Assumes that the ambient temperature is 50°C or less and wiring is performed in an enclosure.

*2 For the 45K or less, the recommended cable size is that of the cable (THHW cable) with continuous maximum permissible temperature of 75°C. Assumes that the ambient temperature is 40°C or less and the wiring distance is 20m or less.
For the 55K or more, the recommended cable size is that of the cable (THHN cable) with continuous maximum permissible temperature of 90°C. Assumes that the ambient temperature is 40°C or less and wiring is performed in an enclosure.
(Selection example for use mainly in the United States.)

*3 For the 45K or less, the recommended cable size is that of the cable (PVC cable) with continuous maximum permissible temperature of 70°C. Assumes that the ambient temperature is 40°C or less and the wiring distance is 20m or less.
For the 55K or more, the recommended cable size is that of the cable (XLPE cable) with continuous maximum permissible temperature of 90°C. Assumes that the ambient temperature is 40°C or less and wiring is performed in an enclosure.
(Selection example for use mainly in Europe.)

*4 The terminal screw size indicates the terminal size for R/L1, S/L2, T/L3, U, V, W, and a screw for earthing (grounding).
For the 110K and 132K, screw sizes are different (R/L1, S/L2, T/L3, U, V, W, a screw for earthing (grounding) / P/+ for option connection)
For the 160K or more, screw sizes are different. (R/L1, S/L2, T/L3, U, V, W / a screw for earthing (grounding))

The line voltage drop can be calculated by the following formula:

$$\text{line voltage drop [V]} = \frac{\sqrt{3} \times \text{wire resistance[m}\Omega\text{/m]} \times \text{wiring distance[m]} \times \text{current[A]}}{1000}$$

Use a larger diameter cable when the wiring distance is long or when it is desired to decrease the voltage drop (torque reduction) in the low speed range.

CAUTION

- Tighten the terminal screw to the specified torque.
  A screw that has been tighten too loosely can cause a short circuit or malfunction.
  A screw that has been tighten too tightly can cause a short circuit or malfunction due to the unit breakage.
- Use crimping terminals with insulation sleeve to wire the power supply and motor.

勝 特 力 材 料 886-3-5753170
胜特力电子(上海) 86-21-34970699
胜特力电子(深圳) 86-755-83298787
Http://www.100y.com.tw

(2) Notes on earthing (grounding)

- Leakage currents flow in the inverter. To prevent an electric shock, the inverter and motor must be earthed (grounded). This inverter must be earthed (grounded). Earthing (Grounding) must conform to the requirements of national and local safety regulations and electrical codes. (JIS, NEC section 250, IEC 536 class 1 and other applicable standards)
- Use the dedicated earth (ground) terminal to earth (ground) the inverter. (Do not use the screw in the casing, chassis, etc.)
- Use the thickest possible earth (ground) cable. Use the cable whose size is equal to or greater than that indicated in *page 15, 16*, and minimize the cable length. The earthing (grounding) point should be as near as possible to the inverter.

To be compliant with the European Directive (Low Voltage Directive), earth (ground) the inverter according to the instructions on page 182.

(3) Total wiring length

The overall wiring length for connection of a single motor or multiple motors should be within the value in the table below. (The wiring length should be 100m maximum for vector control.)

Pr. 72 PWM frequency selection setting (carrier frequency)	0.4K	0.75K	1.5K or more
2 (2kHz) or less	300m	500m	500m
3 to 15 (3kHz to 14.5kHz)	200m	300m	500m

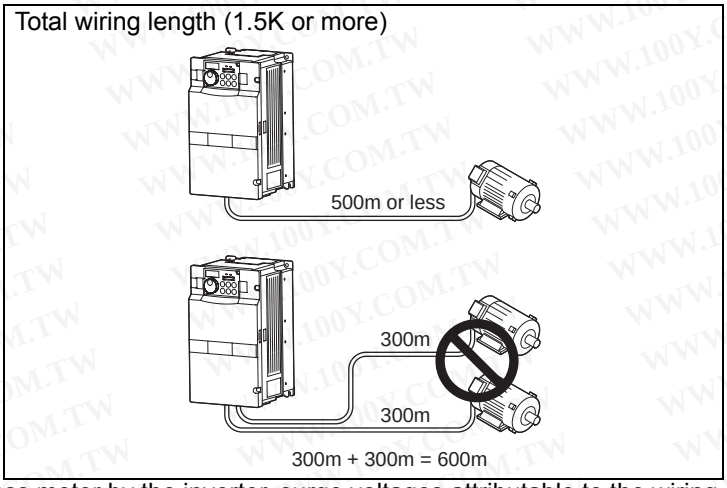

When driving a 400V class motor by the inverter, surge voltages attributable to the wiring constants may occur at the motor terminals, deteriorating the insulation of the motor.
Take the following measures (1) or (2) in this case.

(1) Use a "400V class inverter-driven insulation-enhanced motor" and set frequency in *Pr. 72 PWM frequency selection* according to wiring length

	Wiring Length		
	50m or less	**50m to 100m**	**exceeding 100m**
Carrier frequency	14.5kHz or less	9kHz or less	4kHz or less

(2) Connect the surge voltage suppression filter (FR-ASF-H) to the 55K or less and the sine wave filter (MT-BSL/BSC) to the 75K or more on the inverter output side.

CAUTION

- Especially for long-distance wiring, the inverter may be affected by a charging current caused by the stray capacitances of the wiring, leading to a malfunction of the overcurrent protective function or fast response current limit function or a malfunction or fault of the equipment connected on the inverter output side. If fast-response current limit function malfunctions, disable this function.
  (For *Pr. 156 Stall prevention operation selection, refer to* *Instruction Manual (applied).*)
- For details of *Pr. 72 PWM frequency selection , refer to* *Instruction Manual (applied)*. (When using an option sine wave filter (MT-BSL/BSC) for the 75K or more, set "25" (2.5kHz) in *Pr. 72*.)
  For explanation of surge voltage suppression filter (FR-ASF-H) and sine wave filter (MT-BSL/BSC), refer to the manual of each option.
- Do not perform vector control with a surge voltage suppression filter (FR-ASF-H) or sine wave filer (MT-BSL/BSC) connected.

(4) Cable size of the control circuit power supply (terminal R1/L11, S1/L21)

· Terminal screw size: M4
· Cable size: 0.75mm^2 to 2mm^2
· Tightening torque: 1.5N·m

勝 特 力 材 料 886-3-5753170
胜特力电子(上海) 86-21-34970699
胜特力电子(深圳) 86-755-83298787
Http://www.100y.com.tw

(5) When connecting the control circuit and the main circuit separately to the power supply (separate power)

<Connection diagram>

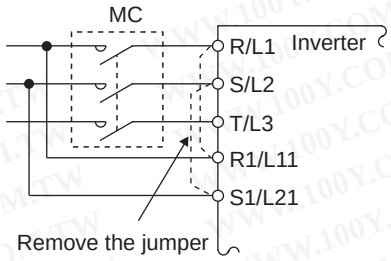

When the protected circuit is activated, opening of the electromagnetic contactor (MC) on the inverter power supply side results in power loss in the control circuit, disabling the alarm output signal retention. Terminals R1/L11 and S1/L21 are provided to hold an alarm signal. In this case, connect the power supply terminals R1/L11 and S1/L21 of the control circuit to the primary side of the MC.

- **FR-A720-0.4K to 3.7K, FR-A740-0.4K to 3.7K**

1) Loosen the upper screws.
2) Remove the lower screws.
3) Remove the jumper
4) Connect the separate power supply cable for the control circuit to the lower terminals (R1/L11, S1/L21).

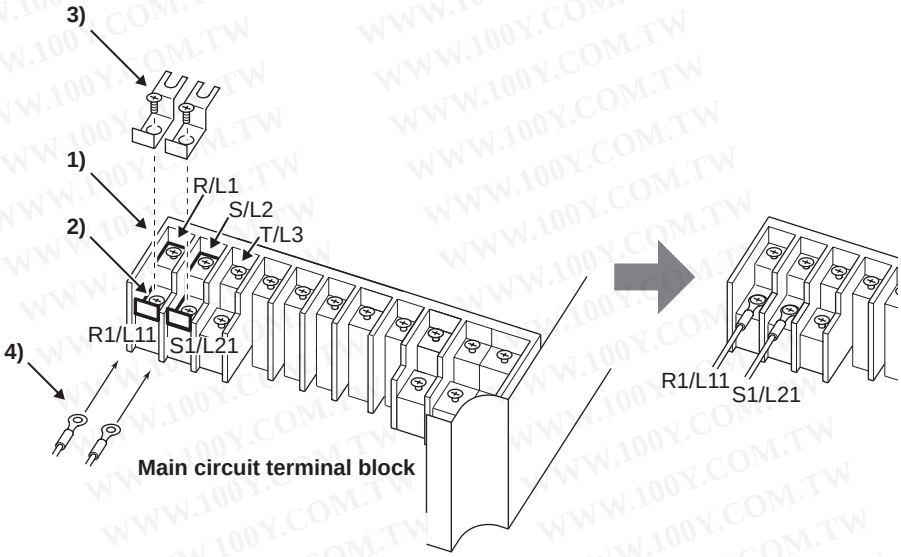

- **FR-A720-5.5K, 7.5K, FR-A740-5.5K, 7.5K**

1) Remove the upper screws.
2) Remove the lower screws.
3) Remove the jumper.
4) Connect the separate power supply cable for the control circuit to the upper terminals (R1/L11, S1/L21).

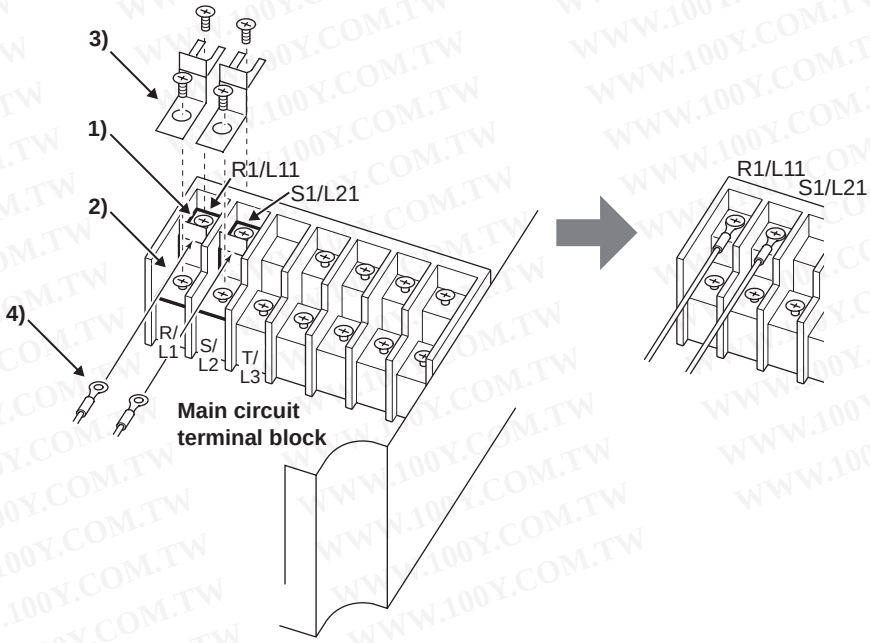

勝 特 力 材 料 886-3-5753170
胜特力电子(上海) 86-21-34970699
胜特力电子(深圳) 86-755-83298787
Http://www.100y.com.tw

• FR-A720-11K or more, FR-A740-11K or more

1) Remove the upper screws.
2) Remove the lower screws.
3) Pull the jumper toward you to remove.
4) Connect the separate power supply cable for the control circuit to the upper terminals (R1/L11, S1/L21). Never connect the power cable to the terminals in the lower stand. Doing so will damage the inverter.

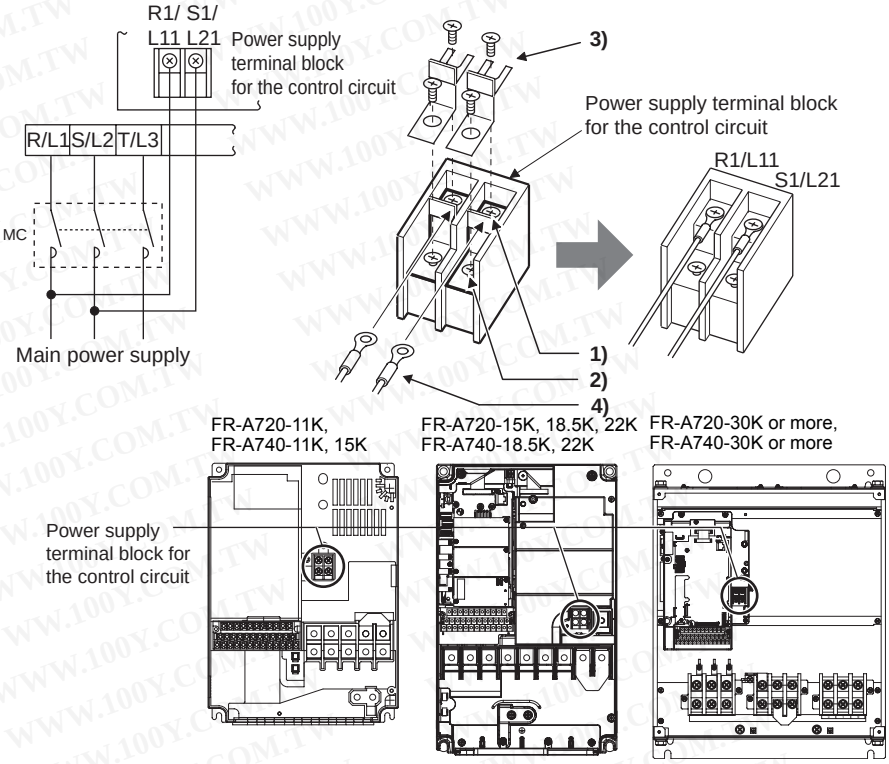

CAUTION

- Do not turn off the control power (terminals R1/L11 and S1/L21) with the main circuit power (R/L1, S/L2, T/L3) on. Doing so may damage the inverter.
- Be sure to use the inverter with the jumpers across terminals R/L1-R1/L11 and S/L2-S1/L21 removed when supplying power from other sources. The inverter may be damaged if you do not remove the jumper.
- The voltage should be the same as that of the main control circuit when the control circuit power is supplied from other than the primary side of the MC.
- The power capacity is 60VA or more for 15K or less, 80VA or more for 18.5K or more when separate power is supplied from R1/L11, S1/L21.
- When the power supply used with the control circuit is different from the one used with the main circuit, make up a circuit which will switch off the main circuit power supply terminals R/L1, S/L2, T/L3 when the control circuit power supply terminals R1/L11, S1/L21 are switched off.
- If the main circuit power is switched off (for 0.1s or more) then on again, the inverter resets and an alarm output will not be held.

勝 特 力 材 料 886-3-5753170
胜特力电子(上海) 86-21-34970699
胜特力电子(深圳) 86-755-83298787
Http://www.100y.com.tw

勝 特 力 材 料 886-3-5753170
胜特力电子(上海) 86-21-34970699
胜特力电子(深圳) 86-755-83298787
Http://www.100y.com.tw

2.4.5 Control circuit terminals

[ ] indicates that terminal functions can be selected using *Pr. 178 to Pr. 196 (I/O terminal function selection) (Refer to Instruction Manual (applied).*)

(1) Input signals

Type	Terminal Symbol	Terminal Name	Description		Rated Specifications	Refer to page
Contact input	STF	Forward rotation start	Turn on the STF signal to start forward rotation and turn it off to stop.	When the STF and STR signals are turned on simultaneously, the stop command is given.	Input resistance 4.7kΩ Voltage at opening: 21 to 27VDC Contacts at short-circuited: 4 to 6mADC	78
	STR	Reverse rotation start	Turn on the STR signal to start reverse rotation and turn it off to stop.			
	STOP	Start self-holding selection	Turn on the STOP signal to self-hold the start signal.			Instruction Manual (applied)
	RH, RM, RL	Multi-speed selection	Multi-speed can be selected according to the combination of RH, RM and RL signals.			79
	JOG	Jog mode selection	Turn on the JOG signal to select Jog operation (initial setting) and turn on the start signal (STF or STR) to start Jog operation.			Instruction Manual (applied)
		Pulse train input	JOG terminal can be used as pulse train input terminal. To use as pulse train input terminal, the *Pr. 291* setting needs to be changed. (maximum input pulse: 100kpulses/s)		Input resistance 2kΩ Contacts at short-circuited: 8 to 13mADC	Instruction Manual (applied)
	RT	Second function selection	Turn on the RT signal to select second function. When the second function such as "second torque boost" and "second V/F (base frequency)" are set, turning on the RT signal selects these functions.		Input resistance 4.7kΩ Voltage at opening: 21 to 27VDC Contacts at short-circuited: 4 to 6mADC	Instruction Manual (applied)
	MRS	Output stop	Turn on the MRS signal (20ms or more) to stop the inverter output. Use to shut off the inverter output when stopping the motor by electromagnetic brake.			Instruction Manual (applied)
	RES	Reset	Used to reset alarm output provided when protective function is activated. Turn on the RES signal for more than 0.1s, then turn it off. Initial setting is for reset always. By setting *Pr. 75*, reset can be set to enabled only at an inverter alarm occurrence. Recover about 1s after reset is cancelled.			129
	AU	Terminal 4 input selection	Terminal 4 is made valid only when the AU signal is turned on. (The frequency setting signal can be set between 4 and 20mADC.) Turning the AU signal on makes terminal 2 (voltage input) invalid.			83
		PTC input	AU terminal is used as PTC input terminal (thermal protection of the motor). When using it as PTC input terminal, set the AU/PTC switch to PTC.			Instruction Manual (applied)
	CS	Selection of automatic restart after instantaneous power failure	When the CS signal is left on, the inverter restarts automatically at power restoration. Note that restart setting is necessary for this operation. In the initial setting, a restart is disabled. *(Refer to Pr. 57 Restart coasting time in Instruction Manual (applied).)*			Instruction Manual (applied)
	SD	Contact input common (sink)	Common terminal for contact input terminal (sink logic) and terminal FM. Common output terminal for 24VDC 0.1A power supply (PC terminal). Isolated from terminals 5 and SE.		——	—
	PC	External transistor common, 24VDC power supply, contact input common (source)	When connecting the transistor output (open collector output), such as a programmable controller (PLC), when sink logic is selected, connect the external power supply common for transistor output to this terminal to prevent a malfunction caused by undesirable currents. Can be used as 24VDC 0.1A power supply. When source logic has been selected, this terminal serves as a contact input common.		Power supply voltage range 19.2 to 28.8VDC Current consumption 100mA	24

Type	Terminal Symbol	Terminal Name	Description	Rated Specifications	Refer to page
Frequency setting	10E	Frequency setting power supply	When connecting the frequency setting potentiometer at an initial status, connect it to terminal 10. Change the input specifications of terminal 2 when connecting it to terminal 10E. *(Refer to Pr. 73 Analog input selection in Instruction Manual (applied).)*	10VDC Permissible load current 10mA	Instruction Manual (applied)
	10			5VDC Permissible load current 10mA	76, 81
	2	Frequency setting (voltage)	Inputting 0 to 5VDC (or 0 to 10V, 4 to 20mA) provides the maximum output frequency at 5V (10V, 20mA) and makes input and output proportional. Use *Pr.73* to switch between input 0 to 5VDC (initial setting) and 0 to 20mADC when the voltage/current input switch is in the OFF position (initially set to OFF). The current input is always the same when the voltage/current input switch is in the ON position (*Pr.73* needs to be set to current input).	Voltage input: Input resistance 10kΩ ± 1kΩ Maximum permissible voltage 20VDC Current input: Input resistance 245Ω ± 5Ω Maximum permissible current 30mA *	76, 81
	4	Frequency setting (current)	Inputting 4 to 20mADC (or 0 to 5V, 0 to 10V) provides the maximum output frequency at 20mA (5V, 10V) makes input and output proportional. This input signal is valid only when the AU signal is on (terminal 2 input is invalid). Use *Pr.267* to switch between input 4 to 20mA (initial setting) and 0 to 10VDC when the voltage/current input switch is in the OFF position (initially set to ON). The current input is always the same when the voltage/current input switch is in the ON position (*Pr.267* needs to be set to current input). Use *Pr. 858* to switch terminal functions. *(Refer to Instruction Manual (applied).)*		77, 83
	1	Frequency setting auxiliary	Inputting 0 to ±5 VDC or 0 to ±10VDC adds this signal to terminal 2 or 4 frequency setting signal. Use *Pr. 73* to switch between the input 0 to ±5VDC and 0 to ±10VDC (initial setting). Use *Pr. 868* to switch terminal functions.	Input resistance 10kΩ ± 1kΩ Maximum permissible voltage ± 20VDC	Instruction Manual (applied)
	5	Frequency setting common	Common terminal for frequency setting signal (terminal 2, 1 or 4) and analog output terminal AM. Do not earth (ground).	——	—

* In the following case, the input resistance is 10kΩ ± 1kΩ while power is off.
- When current input is selected for *Pr.73* or *Pr.267* for the 3.7K or less
- When the voltage/current input switch is in the OFF position and current input is selected for *Pr.73* or *Pr.267* for the 5.5K or more

(2) Output signals

Type	Terminal Symbol	Terminal Name	Description	Rated Specifications	Refer to page
Relay	A1, B1, C1	Relay output 1 (alarm output)	1 changeover contact output indicates that the inverter protective function has activated and the output stopped. Abnormal: No conduction across B-C (Across A-C Continuity), Normal: Across B-C Continuity (No conduction across A-C)	Contact capacity: 230VAC 0.3A (Power factor=0.4) 30VDC 0.3A	Instruction Manual (applied)
	A2, B2, C2	Relay output 2	1 changeover contact output		Instruction Manual (applied)

勝 特 力 材 料 886-3-5753170
胜特力电子(上海) 86-21-34970699
胜特力电子(深圳) 86-755-83298787
Http://www.100y.com.tw

Type	Terminal Symbol	Terminal Name	Description		Rated Specifications	Refer to page
Open collector	RUN	Inverter running	Switched low when the inverter output frequency is equal to or higher than the starting frequency (initial value 0.5Hz). Switched high during stop or DC injection brake operation.*1		Permissible load 24VDC 0.1A (A voltage drop is 2.8V maximum when the signal is on.)	Instruction Manual (applied)
	SU	Up to frequency	Switched low when the output frequency reaches within the range of ±10% (initial value) of the set frequency. Switched high during acceleration/deceleration and at a stop. *1	Alarm code (4bit) output		Instruction Manual (applied)
	OL	Overload alarm	Switched low when stall prevention is activated by the stall prevention function. Switched high when stall prevention is cancelled. *1			Instruction Manual (applied)
	IPF	Instantaneous power failure	Switched low when an instantaneous power failure and under voltage protections are activated. *1			Instruction Manual (applied)
	FU	Frequency detection	Switched low when the inverter output frequency is equal to or higher than the preset detected frequency and high when less than the preset detected frequency. *1			Instruction Manual (applied)
	SE	Open collector output common	Common terminal for terminals RUN, SU, OL, IPF, FU		———	—
Pulse	FM	For meter	Select one e.g. output frequency from monitor items. *2 The output signal is proportional to the magnitude of the corresponding monitoring item.	Output item: Output frequency (initial setting)	Permissible load current 2mA 1440pulses/s at 60Hz	Instruction Manual (applied)
		NPN open collector output		Signals can be output from the open collector terminals by setting *Pr. 291*.	Maximum output pulse: 50kpulses/s Permissible load current : 80mA	Instruction Manual (applied)
Analog	AM	Analog signal output		Output item: Output frequency (initial setting)	Output signal 0 to 10VDC Permissible load current 1mA (load impedance 10kΩ or more) Resolution 8 bit	Instruction Manual (applied)

*1 Low indicates that the open collector output transistor is on (conducts).
High indicates that the transistor is off (does not conduct).
*2 Not output during inverter reset.

(3) Communication

Type	Terminal Symbol		Terminal Name	Description	Refer to page
RS-485	———		PU connector	With the PU connector, communication can be made through RS-485. (for connection on a 1:1 basis only) . Conforming standard : EIA-485(RS-485) . Transmission format : Multidrop . Communication speed : 4800 to 38400bps . Overall length : 500m	26
	RS-485 terminals	TXD+	Inverter transmission terminal	With the RS-485 terminals, communication can be made through RS-485. Conforming standard : EIA-485(RS-485) Transmission format : Multidrop link Communication speed : 300 to 38400bps Overall length : 500m	26
		TXD-			
		RXD+	Inverter reception terminal		
		RXD-			
		SG	Earth (Ground)		
USB	———		USB connector	The FR-Configurator can be performed by connecting the inverter to the personnel computer through USB. Interfase:Conforms to USB1.1 Transmission speed:12Mbps Connector:USB B connector (B receptacle)	27

勝 特 力 材 料 886-3-5753170
胜特力电子(上海) 86-21-34970699
胜特力电子(深圳) 86-755-83298787
Http://www.100y.com.tw

2.4.6 Changing the control logic

The input signals are set to sink logic (SINK) when shipped from the factory.
To change the control logic, the jumper connector on the back of the control circuit terminal block must be moved to the other position.
(The output signals may be used in either the sink or source logic independently of the jumper connector position.)

1) Loosen the two installation screws in both ends of the control circuit terminal block. (These screws cannot be removed.)
   Pull down the terminal block from behind the control circuit terminals.

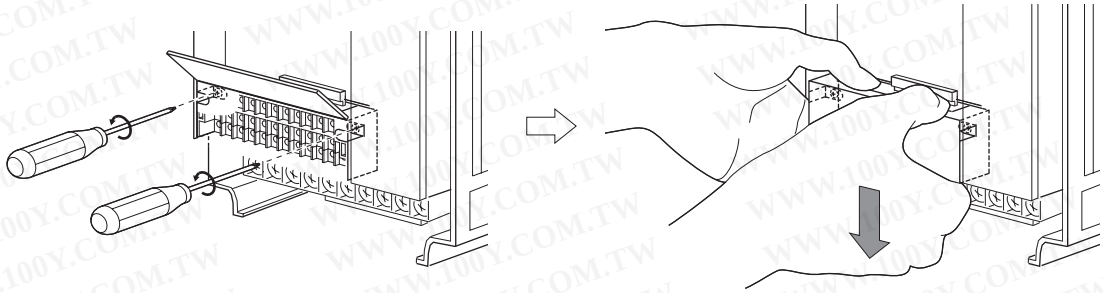

2) Change the jumper connector set to the sink logic (SINK) on the rear panel of the control circuit terminal block to source logic (SOURCE).

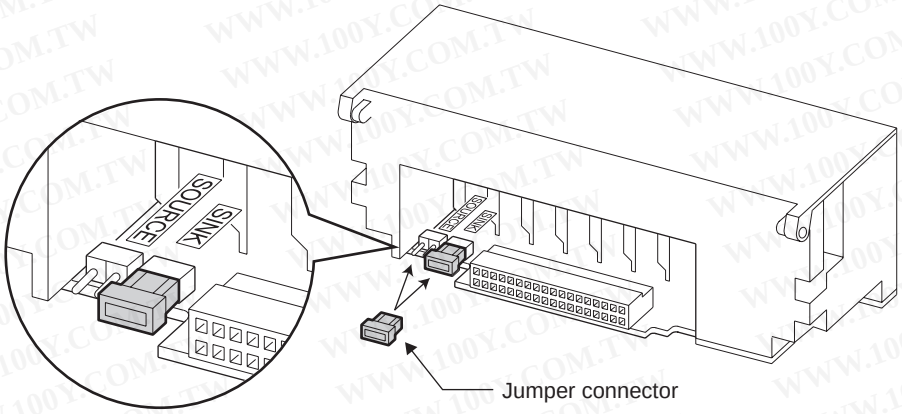

3) Using care not to bend the pins of the inverter's control circuit connector, reinstall the control circuit terminal block and fix it with the mounting screws.

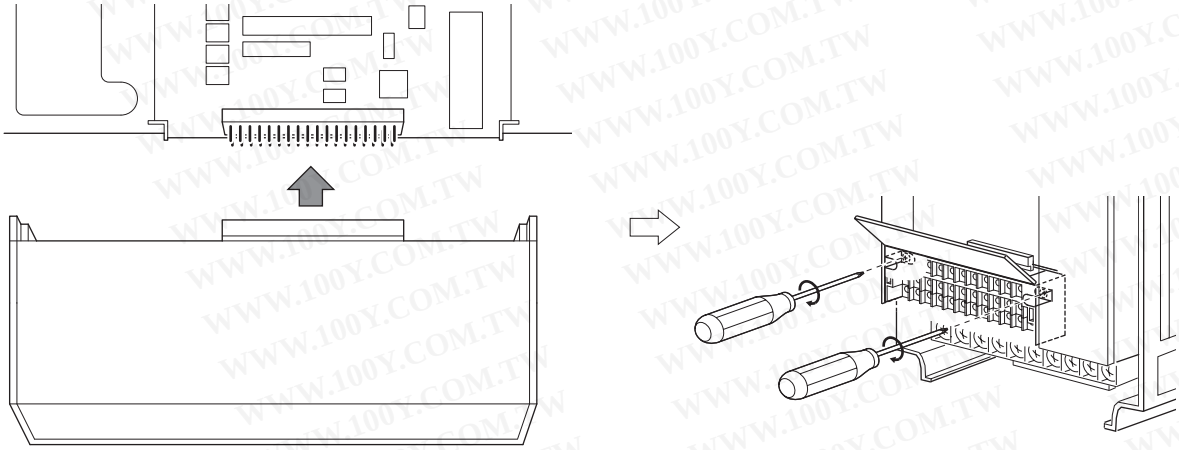

CAUTION

1. Make sure that the control circuit connector is fitted correctly.
2. While power is on, never disconnect the control circuit terminal block.

勝 特 力 材 料 886-3-5753170
胜特力电子(上海) 86-21-34970699
胜特力电子(深圳) 86-755-83298787
Http://www.100y.com.tw

4) Sink logic and source logic

- In sink logic, a signal switches on when a current flows from the corresponding signal input terminal. Terminal SD is common to the contact input signals. Terminal SE is common to the open collector output signals.
- In source logic, a signal switches on when a current flows into the corresponding signal input terminal. Terminal PC is common to the contact input signals. Terminal SE is common to the open collector output signals.

●Current flow concerning the input/output signal when sink logic is selected

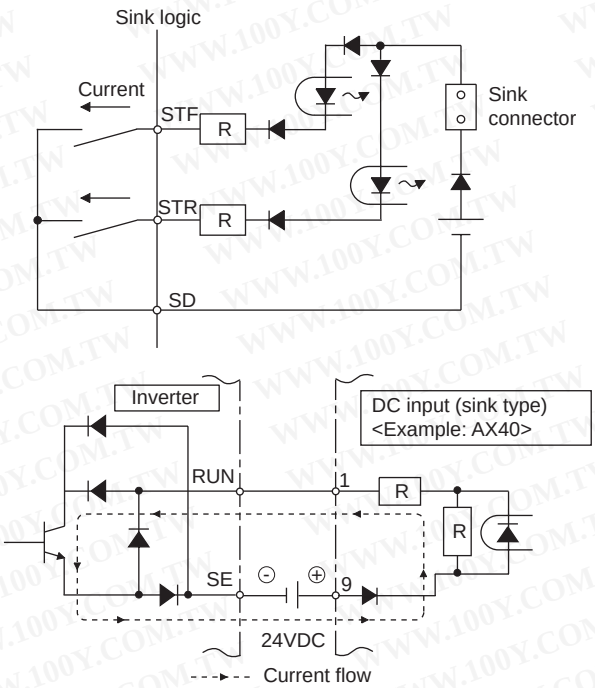

●Current flow concerning the input/output signal when source logic is selected

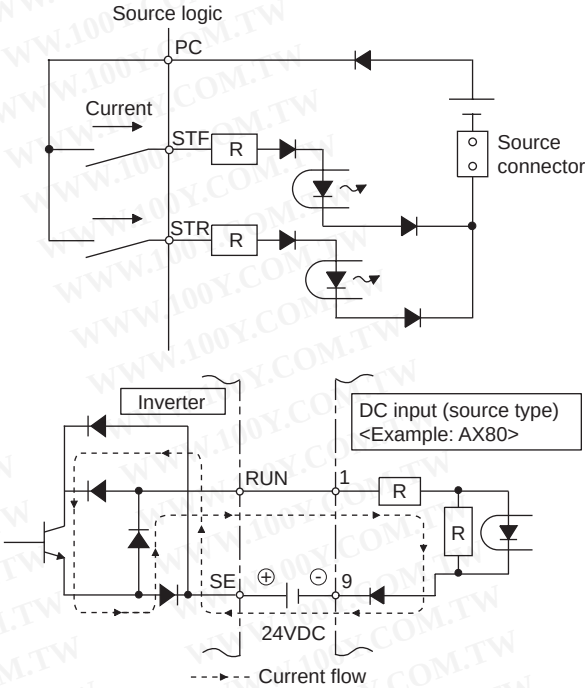

- When using an external power supply for transistor output

· Sink logic type	· Source logic type
Use terminal PC as a common terminal to prevent a malfunction caused by undesirable current. (Do not connect terminal SD of the inverter with terminal 0V of the external power supply. When using terminals PC-SD as a 24VDC power supply, do not install a power supply in parallel in the outside of the inverter. Doing so may cause a malfunction due to undesirable current.)	When using an external power supply for transistor output, use terminal SD as a common to prevent misoperation caused by undesirable current.
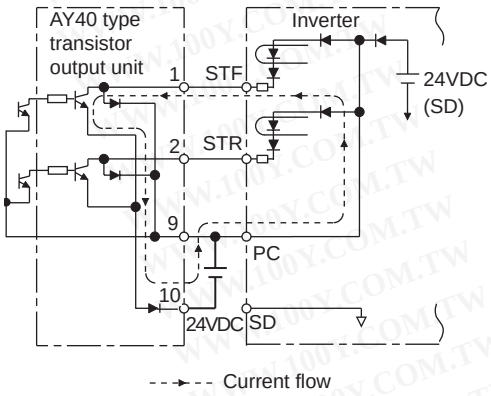	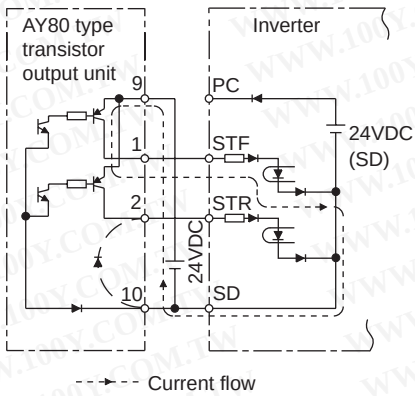

勝 特 力 材 料 886-3-5753170
胜特力电子(上海) 86-21-34970699
胜特力电子(深圳) 86-755-83298787
Http://www.100y.com.tw

2.4.7 Wiring of control circuit

(1) Control circuit terminal layout

Terminal screw size: M3.5
Tightening torque: 1.2N·m

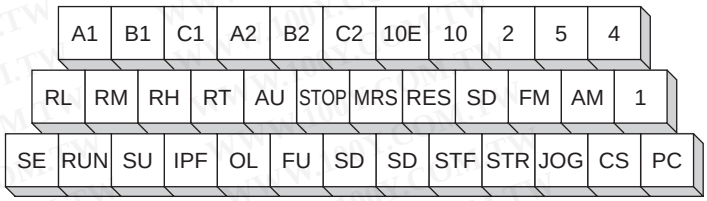

(2) Wiring instructions

1) Terminals 5, SD and SE are common to the I/O signals and isolated from each other. Do not earth (ground). Avoid connecting the terminal SD and 5 and the terminal SE and 5.
2) Use shielded or twisted cables for connection to the control circuit terminals and run them away from the main and power circuits (including the 200V relay sequence circuit).
3) Use two or more parallel micro-signal contacts or twin contacts to prevent a contact faults when using contact inputs since the control circuit input signals are micro-currents.

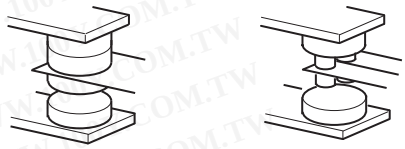

Micro signal contacts Twin contacts

4) Do not apply a voltage to the contact input terminals (e.g. STF) of the control circuit.
5) Always apply a voltage to the alarm output terminals (A, B, C) via a relay coil, lamp, etc.
6) It is recommended to use the cables of 0.75mm^2 gauge for connection to the control circuit terminals.
   If the cable gauge used is 1.25mm^2 or more, the front cover may be lifted when there are many cables running or the cables are run improperly, resulting in an operation panel contact fault.
7) The wiring length should be 30m maximum.

● Wiring of the control circuit of the 75K or more

For wiring of the control circuit of the 75K or more, separate away from wiring of the main circuit.
Make cuts in rubber bush of the inverter side and lead wires.

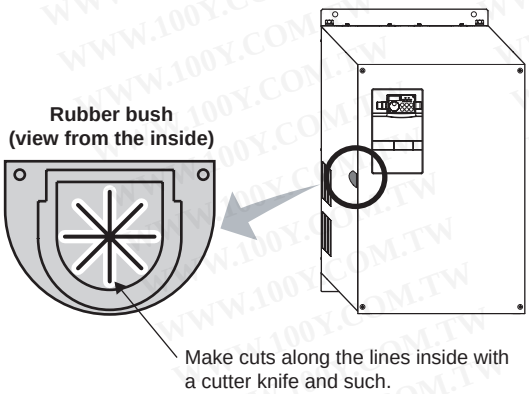

<Wiring>

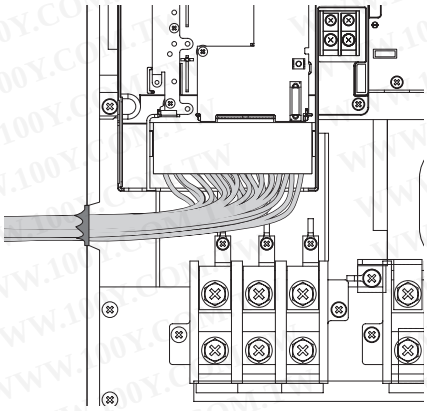

勝 特 力 材 料 886-3-5753170
胜特力电子(上海) 86-21-34970699
胜特力电子(深圳) 86-755-83298787
Http://www.100y.com.tw

2.4.8 When connecting the operation panel using a connection cable

When connecting the operation panel (FR-DU07) to the inverter using a cable, the operation panel can be mounted on the enclosure surface and operationality improves.

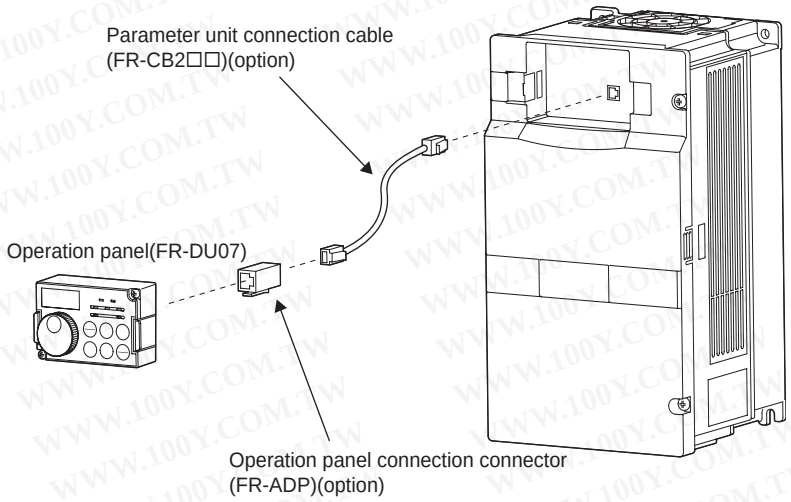

CAUTION

Do not connect the PU connector to the computer's LAN port, FAX modem socket or telephone connector.
The inverter and machine could be damaged due to differences in electrical specifications.

REMARKS

- Refer to *page 5* for removal method of the operation panel.
- When using a commercially available connector and cable as a parameter unit connection cable, refer to *Instruction Manual (applied)*.
- The inverter can be connected to the computer and FR-PU04/FR-PU07.

2.4.9 RS-485 terminal block

- Conforming standard: EIA-485(RS-485)
- Transmission format: Multidrop link
- Communication speed: MAX 38400bps
- Overall length: 500m
- Connection cable:Twisted pair cable (4 paires)

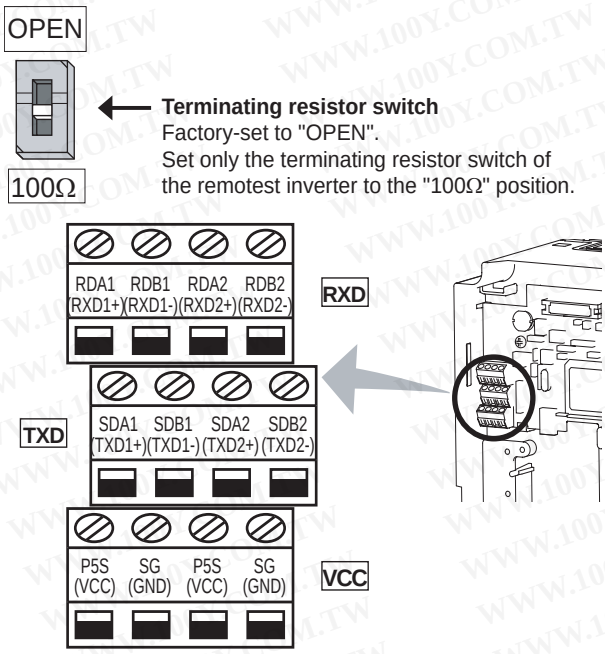

勝 特 力 材 料 886-3-5753170
胜特力电子(上海) 86-21-34970699
胜特力电子(深圳) 86-755-83298787
Http://www.100y.com.tw

2.4.10 Communication operation

Using the PU connector or RS-485 terminal, you can perform communication operation from a personal computer etc. When the PU connector is connected with a personal, FA or other computer by a communication cable, a user program can run and monitor the inverter or read and write to parameters.
For the Mitsubishi inverter protocol (computer link operation), communication can be performed with the PU connector and RS-485 terminal.
For the Modbus RTU protocol, communication can be performed with the RS-485 terminal.

For further details, refer to *Instruction Manual (applied)*.

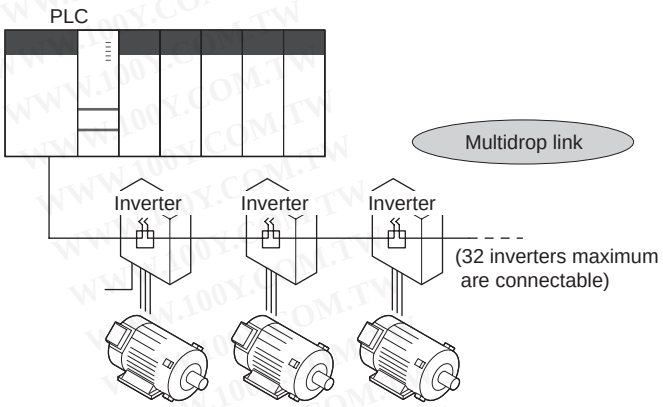

2.4.11 USB connector

A personal computer and an inverter can be connected with a USB (Ver1. 1) cable.
You can perform parameter setting and monitoring with the FR-Configurator.

•USB communication specifications

Interfase	Conforms to USB1.1
Transmission speed	12Mbps
Wiring length	Maximum 5m
Connector	USB B connector (B receptacle)
Power supply	Self-power supply

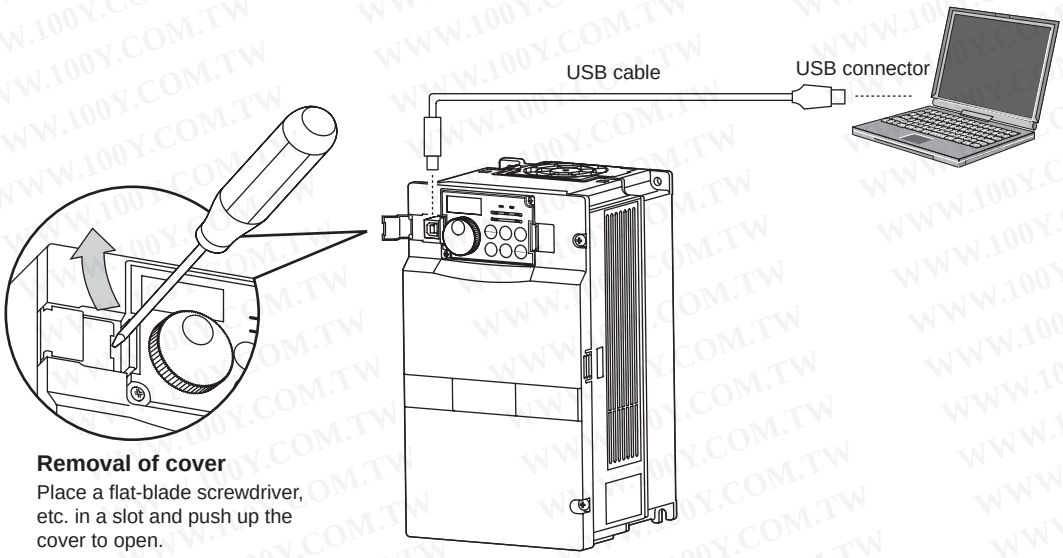

勝 特 力 材 料 886-3-5753170
胜特力电子(上海) 86-21-34970699
胜特力电子(深圳) 86-755-83298787
Http://www.100y.com.tw

2.4.12 Connection of motor with encoder(vector control)

Orientation control and encoder feedback control, and speed control, torque control and position control by full-scale vector control operation can be performed using a motor with encoder and a plug-in option FR-A7AP.

(1) Structure of the FR-A7AP

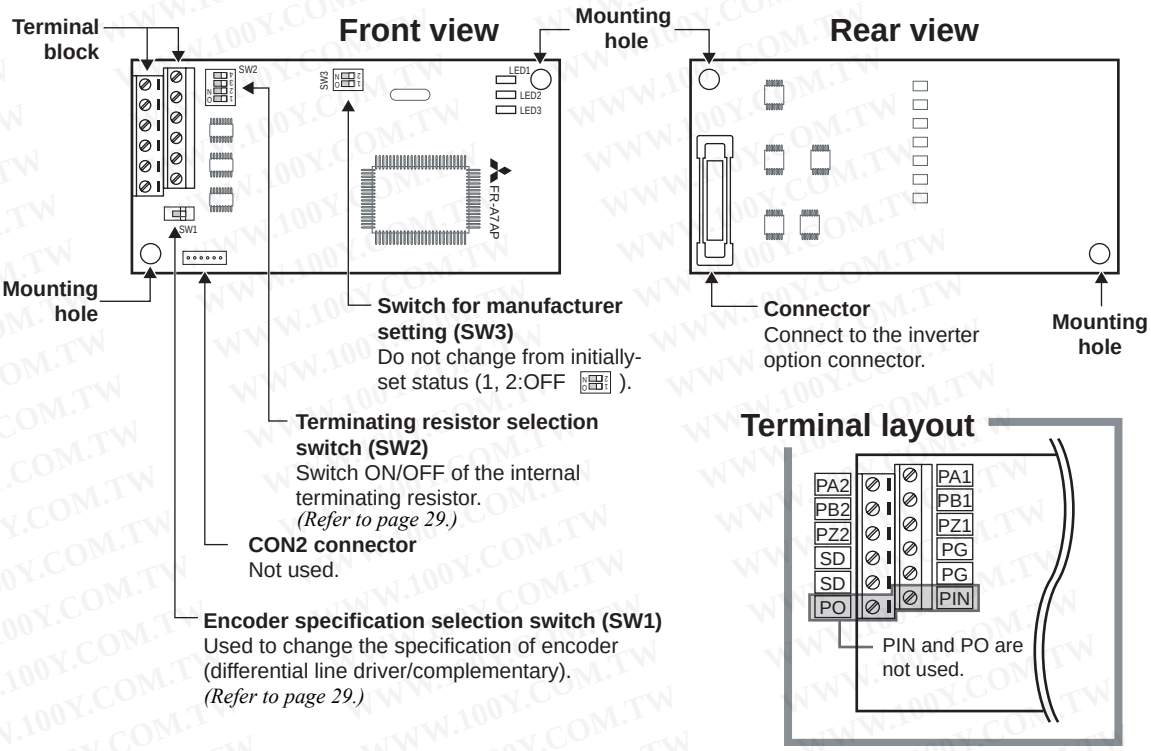

(2) Terminals of the FR-A7AP

Terminal	Terminal Name	Description
PA1	Encoder A-phase signal input	A-, B- and Z-phase signals are input from the encoder.
PA2	Encoder A-phase inverse signal input	
PB1	Encoder B-phase signal input	
PB2	Encoder B-phase inverse signal input	
PZ1	Encoder Z-phase signal input	
PZ2	Encoder Z-phase inversion signal input	
PG	Power supply (positive side) input	Input power for the encoder power supply. Connect the external power supply (5V, 12V, 15V, 24V) and the encoder power cable.
SD	Power supply ground	
PIN	Not used.	
PO		

勝 特 力 材 料 886-3-5753170
胜特力电子(上海) 86-21-34970699
胜特力电子(深圳) 86-755-83298787
Http://www.100y.com.tw

(3) Switches of the FR-A7AP

- Encoder specification selection switch (SW1)
  Select either differential line driver or complementary
  It is initially set to the differential line driver. Switch its position according to output circuit.

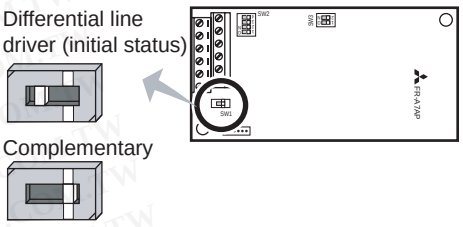

- Terminating resistor selection switch (SW2)
  Select ON/OFF of the internal terminating resistor. Set the switch to ON (initial status) when an encoder output type is differential line driver and set to OFF when complimentary.
  ON : with internal terminating resistor (initial setting status)
  OFF : without internal terminating resistor

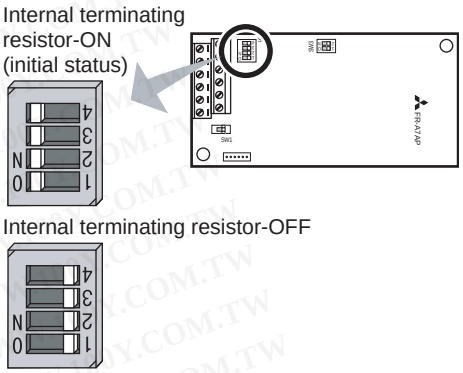

REMARKS

- Set all swithces to the same setting (ON/OFF).
- If the encoder output type is differential line driver, set the terminating resistor switch to the "OFF" position when sharing the same encoder with other unit (NC (numerical controller), etc) or a terminating resistor is connected to other unit.

- Motor used and switch setting

Motor		Encoder Specification Selection Switch (SW1)	Terminating Resistor Selection Switch (SW2)	Power Specifications *2
Mitsubishi standard motor Mitsubishi high efficiency motor	SF-JR	Differential	ON	5V
	SF-HR	Differential	ON	5V
	Others	*1	*1	*1
Mitsubishi constant-torque motor	SF-JRCA	Differential	ON	5V
	SF-HRCA	Differential	ON	5V
	Others	*1	*1	*1
Dedicated motor	SF-V5RU	Complimentary	OFF	12V
	SF-VR	Differential	ON	5V
Other manufacturer motor	–	*1	*1	*1

*1 Set according to the motor encoder used.
*2 Choose a power supply for encoder according to the encoder used (5V/12V/15V/24V).

CAUTION

SW3 switch is for manufacturer setting. Do not change the setting.

- Encoder specification

Item	Encoder for SF-JR	Encoder for SF-V5RU
Resolution	1024 Pulse/Rev	2048 Pulse/Rev
Power supply voltage	DC5V±10%	DC12V±10%
Current consumption	150mA	150mA
Output signal form	A, B phases (90° phase shift) Z phase: 1 pulse/rev	A, B phases (90° phase shift) Z phase: 1 pulse/rev
Output circuit	Differential line driver 74LS113 equivalent	Complimentary (constant voltage output matched by emitter follow)
Output voltage	H level: 2.4V or more L level: 0.5V or less	H level: -3V or more L level: 3V or less

CAUTION

Encoder with resolution of 1000 to 4096 pulse/rev is recommended.

勝 特 力 材 料 886-3-5753170
胜特力电子(上海) 86-21-34970699
胜特力电子(深圳) 86-755-83298787
Http://www.100y.com.tw

勝 特 力 材 料 886-3-5753170
胜特力电子(上海) 86-21-34970699
胜特力电子(深圳) 86-755-83298787
Http://www.100y.com.tw

(4) Encoder Cable

SF-JR Motor with Encoder

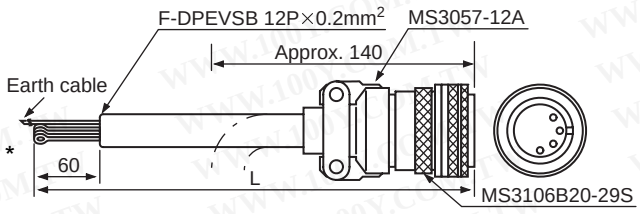

Type	Length L (m)
FR-JCBL5	5
FR-JCBL15	15
FR-JCBL30	30

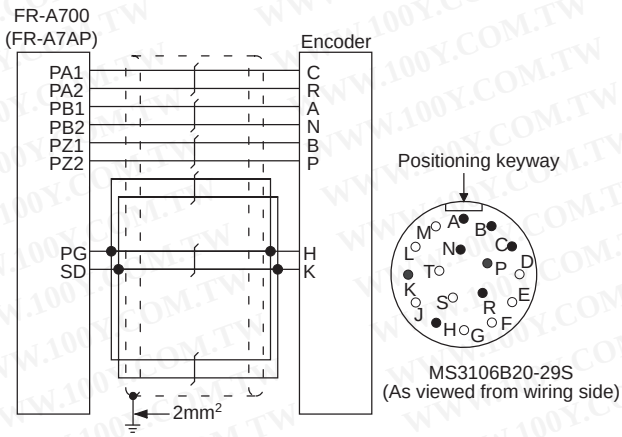

SF-V5RU

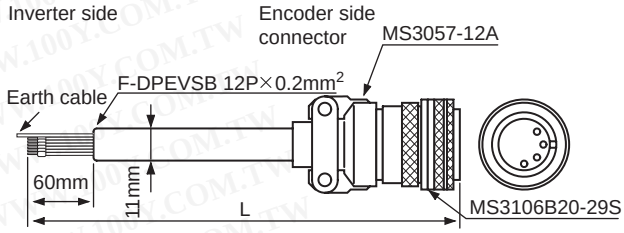

· A P clip for earthing (grounding) a shielded cable is provided.

Type	Length L (m)
FR-V7CBL5	5
FR-V7CBL15	15
FR-V7CBL30	30

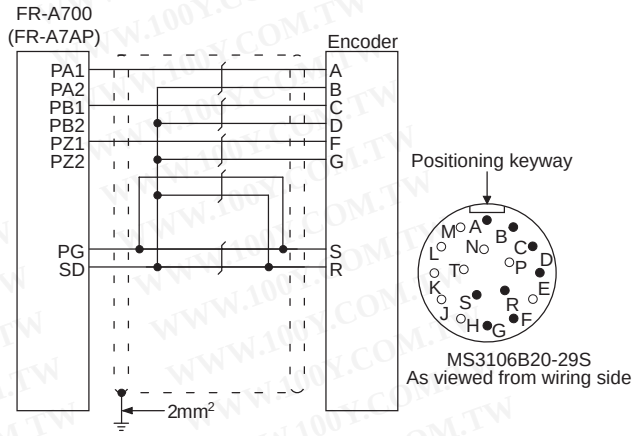

* As the terminal block of the FR-A7AP is an insertion type, earth cables need to be modified. (See below)

- When using the dedicated encoder cable (FR-JCBL, FR-V5CBL, etc.) for the conventional motor, cut the crimpling terminal of the encoder cable and strip its sheath to make its cables loose.
  Also, protect the shielded cable of the twisted pair shielded cable to ensure that it will not make contact with the conductive area.

Cable stripping size

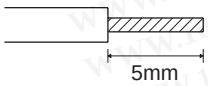

Wire the stripped cable after twisting it to prevent it from becoming loose. In addition, do not solder it. In addition, do not solder it. In addition, do not solder it.
Use a bar terminal as necessary.

REMARKS

Information on bar terminals
Introduced products (as of August, 2005): Phoenix Contact Co.,Ltd.

Terminal Screw Size	Bar Terminal Model (with insulation sleeve)	Bar Terminal Model (without insulation sleeve)	Wire Size (mm^2)
M2	AI 0.5-6WH	A 0.5-6	0.3 to 0.5

When using the bar terminal (without insulation sleeve), use care so that the twisted wires do not come out.

Connection terminal compatibility table

Motor		SF-V5RU	SF-JR/HR/JRCA/HRCA (with Encoder)
Encoder cable		FR-V7CBL/FR-V5CBL	FR-JCBL
FR-A7AP terminal	PA1	PA	PA
	PA2	Keep this open.	PAR
	PB1	PB	PB
	PB2	Keep this open.	PBR
	PZ1	PZ	PZ
	PZ2	Keep this open.	PZR
	PG	PG	5E
	SD	SD	AG2

勝 特 力 材 料 886-3-5753170
胜特力电子(上海) 86-21-34970699
胜特力电子(深圳) 86-755-83298787
Http://www.100y.com.tw

(5) Wiring

- Speed control

Standard motor with encoder (SF-JR), 5V differential line driver	Vector control dedicated motor (SF-V5RU), 12V complimentary
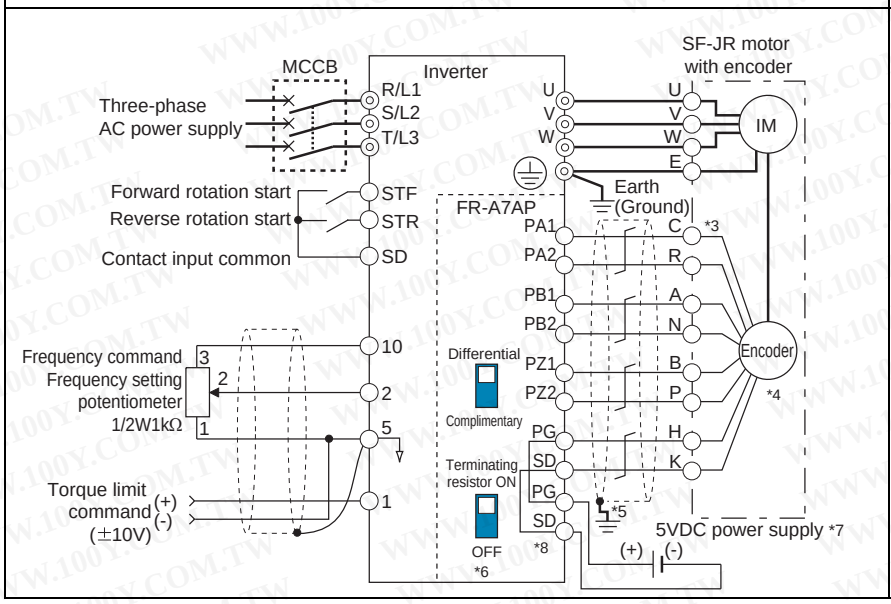	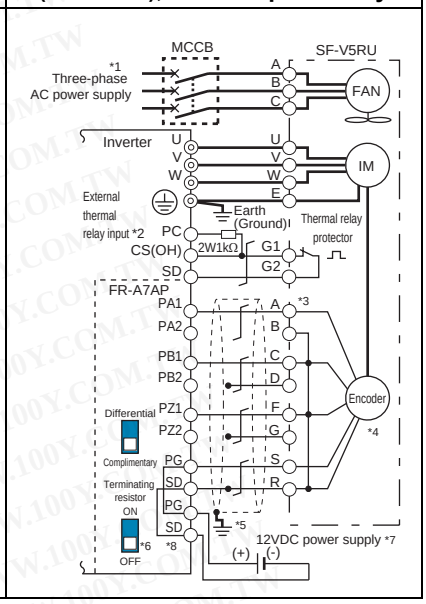

- Torque control

Standard motor with encoder (SF-JR), 5V differential line driver	Vector control dedicated motor (SF-V5RU), 12V complimentary
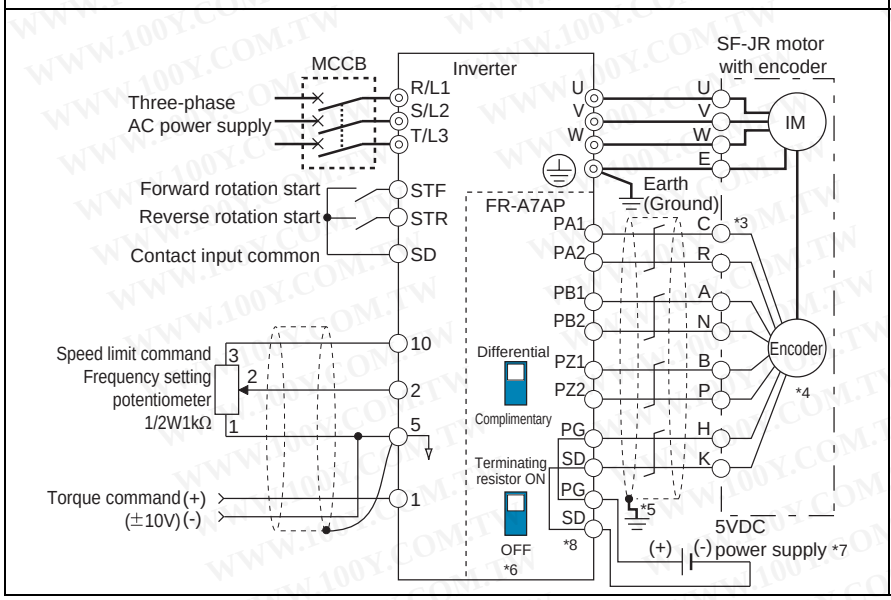	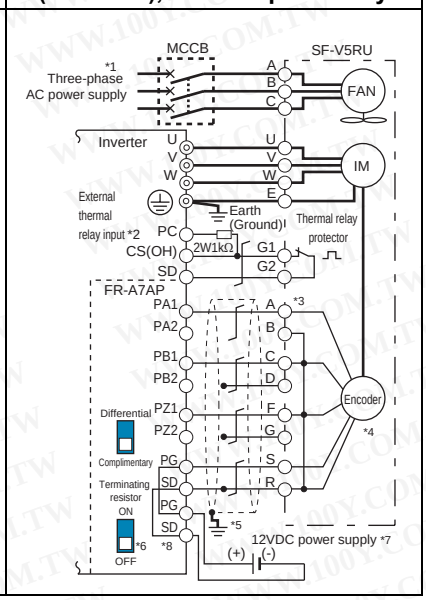

*1 For the fan of the 7.5kW or less dedicated motor, the power supply is single phase. (200V/50Hz, 200 to 230V/60Hz)

*2 Assign OH (external thermal input) signal to the terminal CS. (Set "7" in *Pr. 186*)
Connect a 2W1kW resistor between the terminal PC and CS (OH). Install the resistor pushing against the bottom part of the terminal block so as to avoid a contact with other cables.
Refer to the instruction manual (applied) for details of Pr.186 CS terminal function selection.

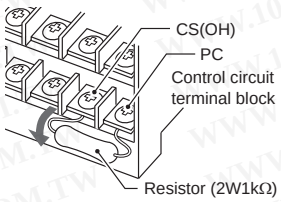

*3 The pin number differs according to the encoder used.

*4 Connect the encoder so that there is no looseness between the motor and motor shaft. Speed ratio should be 1:1.

*5 Earth (Ground) the shielded cable of the encoder cable to the enclosure with a P clip, etc. *(Refer to page 33.)*

*6 For the complementary, set the terminating resistor selection switch to off position. *(Refer to page 29.)*

*7 A separate power supply of 5V/12V/15V/24V is necessary according to the encoder power specification.
When performing orientation control together, an encoder and power supply can be shared.

*8 For terminal compatibility of the FR-JCBL, FR-V7CBL and FR-A7AP, refer to *page 30*.

- Position control

Vector control dedicated motor (SF-V5RU), 12V complimentary

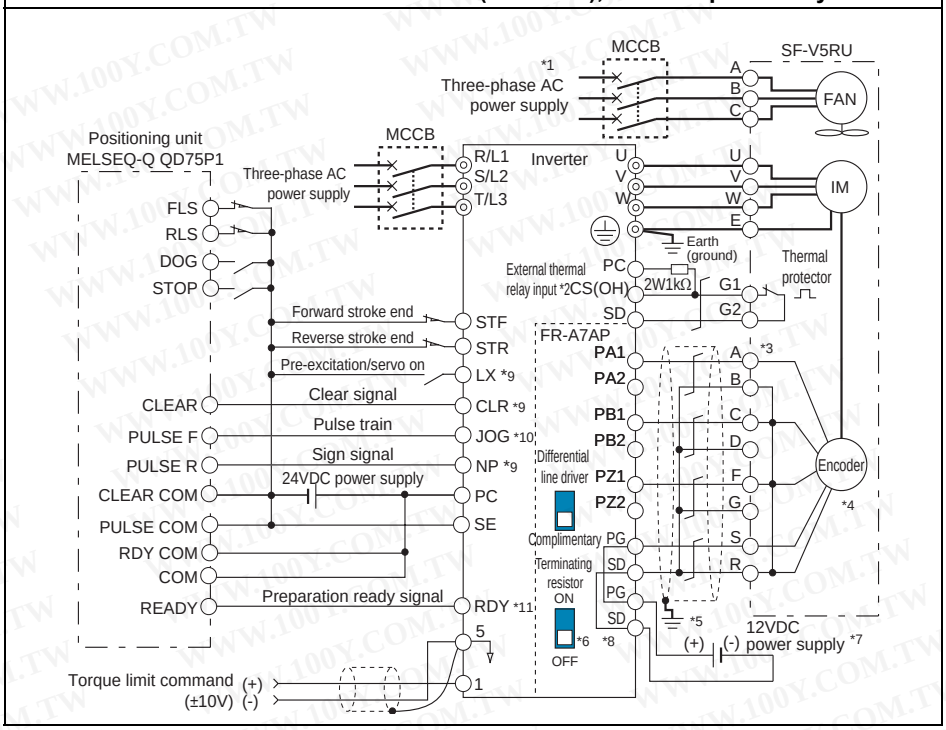

*1 For the fan of the 7.5kW or less dedicated motor, the power supply is single phase. (200V/50Hz, 200 to 230V/60Hz)

*2 Assign OH (external thermal input) signal to the terminal CS. (Set "7" in *Pr. 186*)
Connect a 2W1kW resistor between the terminal PC and CS (OH). Install the resistor pushing against the bottom part of the terminal block so as to avoid a contact with other cables.
Refer to the instruction manual (applied) for details of Pr.186 CS terminal function selection.

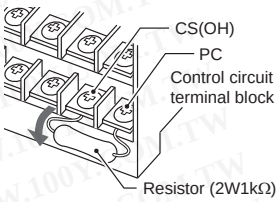

*3 The pin number differs according to the encoder used.

*4 Connect the encoder so that there is no looseness between the motor and motor shaft. Speed ratio should be 1:1.

*5 Earth (Ground) the shielded cable of the encoder cable to the enclosure with a P clip, etc. *(Refer to page 33.)*

*6 For the complementary, set the terminating resistor selection switch to off position. *(Refer to page 29.)*

*7 A separate power supply of 5V/12V/15V/24V is necessary according to the encoder power specification.
When performing orientation control together, an encoder and power supply can be shared.

*8 For terminal compatibility of the FR-JCBL, FR-V7CBL and FR-A7AP, refer to *page 30*.

*9 Assign the function using *Pr.178 to Pr.184, Pr.187 to Pr.189 (input terminal function selection)*.

*10 When position control is selected, terminal JOG function is made invalid and conditional position pulse train input terminal becomes valid.

*11 Assign the function using *Pr.190 to Pr.194 (output terminal function selection)*.

勝 特 力 材 料 886-3-5753170
胜特力电子(上海) 86-21-34970699
胜特力电子(深圳) 86-755-83298787
Http://www.100y.com.tw

(6) Instructions for encoder cable wiring

- Use twisted pair shield cables (0.2mm^2 or larger) to connect the FR-A7AP and position detector. Cables to terminals PG and SD should be connected in paralell or be larger in size according to the cable length.
  To protect the cables from noise, run them away from any source of noise (e.g. the main circuit and power voltage).

Wiring Length	Paralell Connection		Larger-Size Cable
Within 10m	At least 2 cables	Cable gauge 0.2mm^2	0.4mm^2 or larger
Within 20m	At least 4 cables		0.75mm^2 or larger
Within 100m *	At least 6 cables		1.25mm^2 or larger

* When differential driver is set and a wiring length is 30m or more
The wiring length can be extended to 100m by slightly increasing the power by 5V (approx. 5.5V) using six or more cables with gauge size of 0.2mm^2 in parallel or a cable with gauge size of 1.25mm^2 or more. Note that the voltage applied should be within power supply specifications of encoder.

- To reduce noise of the encoder cable, earth (ground) the encoder shielded cable to the enclosure (as near as the inverter) with a P clip or U clip made of metal.

Earthing (grounding) example using a P clip

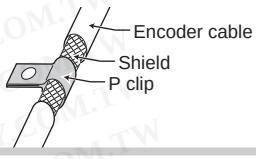

REMARKS

- For details of the optional encoder dedicated cable (FR-JCBL/FR-V7CBL), refer to *page 30*.
- The FR-V7CBL is provided with a P clip for earthing (grounding) shielded cable.

(7) Parameter for encoder *(Pr.359, Pr.369)*

Parameter Number	Name	Initial Value	Setting Range	Description
359	**Encoder rotation direction**	1	0	Forward rotation is clockwise rotation when viewed from A.
			1	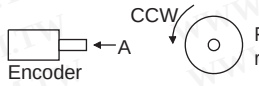 Forward rotation is counterclockwise rotation when viewed from A.
369	**Number of encoder pulses**	1024	0 to 4096	Set the number of encoder pulses output. Set the number of pulses before it is multiplied by 4.

The above parameters can be set when the FR-A7AP (option) is mounted.

(8) Motor for vector control and parameter setting

Motor name		*Pr.9* *Electronic thermal O/L relay*	*Pr.71* *Applied motor*	*Pr.80* *Motor capacity*	*Pr.81* *Number of motor poles*	*Pr.359* *Encoder rotation direction*	*Pr.369* *Number of encoder pulses*
Mitsubishi standard motor	SF-JR	Motor rated current	0	Motot capacity	Number of motor poles	1	1024
	SF-JR 4P 1.5kW or less	Motor rated current	20	Motot capacity	Number of motor poles	1	1024
	SF-HR	Motor rated current	40	Motot capacity	Number of motor poles	1	1024
	Others	Motor rated current	3 *1	Motot capacity	Number of motor poles	*2	*2
Mitsubishi constant-torque motor	SF-JRCA 4P	Motor rated current	1	Motot capacity	4	1	1024
	SF-HRCA 4P	Motor rated current	50	Motot capacity	4	1	1024
	Others	Motor rated current	13 *1	Motot capacity	Number of motor poles	*2	*2
Vector control dedicated motor	SF-V5RU 1500r/min series	0 *3	30	Motot capacity	4	1	2048
	SF-V5RU1, 3, 4	0 *3	33 *1	Motot capacity	4	1	2048
Other manufacturer's standard motor	—	Motor rated current	3 *1	Motot capacity	Number of motor poles	*2	*2
Other manufacturer's constant torque motor	—	Motor rated current	13 *1	Motot capacity	Number of motor poles	*2	*2

Values in the bolded frame are initial values.

*1 Offline auto tuning is necessary. *(Refer to page 63)*
*2 Set this parameter according to the motor (encoder) used.
*3 Use thermal protector input provided with the motor.

勝 特 力 材 料 886-3-5753170
胜特力电子(上海) 86-21-34970699
胜特力电子(深圳) 86-755-83298787
Http://www.100y.com.tw

勝 特 力 材 料 886-3-5753170
胜特力电子(上海) 86-21-34970699
胜特力电子(深圳) 86-755-83298787
Http://www.100y.com.tw

(9) Combination with a vector control dedicated motor

Refer to the table below when using with a vector control dedicated motor.

- Combination with the SF-V5RU and SF-THY

Voltage	200V class			400V class		
Rated speed	1500r/min					
Base frequency	50Hz					
Maximum speed	3000r/min					
Motor capacity	Motor frame number	Motor type	Inverter type	Motor frame number	Motor type	Inverter type
1.5kW	90L	SF-V5RU1K	FR-A720-2.2K	90L	SF-V5RUH1K	FR-A740-2.2K
2.2kW	100L	SF-V5RU2K	FR-A720-3.7K	100L	SF-V5RUH2K	FR-A740-2.2K
3.7kW	112M	SF-V5RU3K	FR-A720-5.5K	112M	SF-V5RUH3K	FR-A740-3.7K
5.5kW	132S	SF-V5RU5K	FR-A720-7.5K	132S	SF-V5RUH5K	FR-A740-7.5K
7.5kW	132M	SF-V5RU7K	FR-A720-11K	132M	SF-V5RUH7K	FR-A740-11K
11kW	160M	SF-V5RU11K	FR-A720-15K	160M	SF-V5RUH11K	FR-A740-15K
15kW	160L	SF-V5RU15K	FR-A720-18.5K	160L	SF-V5RUH15K	FR-A740-18.5K
18.5kW	180M	SF-V5RU18K	FR-A720-22K	180M	SF-V5RUH18K	FR-A740-22K
22kW	180M	SF-V5RU22K	FR-A720-30K	180M	SF-V5RUH22K	FR-A740-30K
30kW	200L*2	SF-V5RU30K	FR-A720-37K	200L*2	SF-V5RUH30K	FR-A740-37K
37kW	200L*2	SF-V5RU37K	FR-A720-45K	200L*2	SF-V5RUH37K	FR-A740-45K
45kW	200L*2	SF-V5RU45K	FR-A720-55K	200L*2	SF-V5RUH45K	FR-A740-55K
55kW	225S*1	SF-V5RU55K	FR-A720-75K	225S*1	SF-V5RUH55K	FR-A740-75K
75kW	250MD	SF-THY	FR-A720-90K	250MD	SF-THY	FR-A740-90K
90kW	—	—	—	250MD	SF-THY	FR-A740-110K
110kW	—	—	—	280MD	SF-THY	FR-A740-132K
132kW	—	—	—	280MD	SF-THY	FR-A740-160K
160kW	—	—	—	280MD	SF-THY	FR-A740-185K
200kW	—	—	—	280L	SF-THY	FR-A740-220K
250kW	—	—	—	315H	SF-THY	FR-A740-280K

- Combination with the SF-V5RU1, 3, 4 and SF-THY

	SF-V5RU□1 (1:2)			SF-V5RU□3 (1:3)			SF-V5RU□4 (1:4)		
Voltage	200V class								
Rated speed	1000r/min			1000r/min			500r/min		
Base frequency	33.33Hz			33.33Hz			16.6Hz		
Maximum speed	2000r/min			3000r/min			2000r/min		
Motor capacity	Motor frame number	Motor type	Inverter type	Motor frame number	Motor type	Inverter type	Motor frame number	Motor type	Inverter type
1.5kW	100L	SF-V5RU1K1	FR-A720-2.2K	112M	SF-V5RU1K3	FR-A720-2.2K	132M	SF-V5RU1K4	FR-A720-2.2K
2.2kW	112M	SF-V5RU2K1	FR-A720-3.7K	132S	SF-V5RU2K3	FR-A720-3.7K	160M	SF-V5RU2K4	FR-A720-3.7K
3.7kW	132S	SF-V5RU3K1	FR-A720-5.5K	132M	SF-V5RU3K3	FR-A720-5.5K	160L	SF-V5RU3K4	FR-A720-7.5K
5.5kW	132M	SF-V5RU5K1	FR-A720-7.5K	160M	SF-V5RU5K3	FR-A720-7.5K	180L	SF-V5RU5K4	FR-A720-7.5K
7.5kW	160M	SF-V5RU7K1	FR-A720-11K	160L	SF-V5RU7K3	FR-A720-11K	200L*2	SF-V5RU7K4	FR-A720-11K
11kW	160L	SF-V5RU11K1	FR-A720-15K	180M	SF-V5RU11K3	FR-A720-15K	225S*2	SF-V5RU11K4	FR-A720-15K
15kW	180M	SF-V5RU15K1	FR-A720-18.5K	180L	SF-V5RU15K3	FR-A720-18.5K	225S*2	SF-V5RU15K4	FR-A720-22K
18.5kW	180L	SF-V5RU18K1	FR-A720-22K	200L*2	SF-V5RU18K3	FR-A720-22K	250MD*2	SF-THY	FR-A720-22K
22kW	200L	SF-V5RU22K1	FR-A720-30K	200L*2	SF-V5RU22K3	FR-A720-30K	280MD*2	SF-THY	FR-A720-30K
30kW	200L	SF-V5RU30K1	FR-A720-37K	225S*1	SF-V5RU30K3	FR-A720-37K	280MD*2	SF-THY	FR-A720-37K
37kW	225S	SF-V5RU37K1	FR-A720-45K	250MD*1	SF-THY	FR-A720-45K	280MD*2	SF-THY	FR-A720-45K
45kW	250MD	SF-THY	FR-A720-55K	250MD*1	SF-THY	FR-A720-55K	280MD*2	SF-THY	FR-A720-55K
55kW	250MD	SF-THY	FR-A720-75K	280MD*1	SF-THY	FR-A720-75K	280L*2	SF-THY	FR-A720-75K

Models surrounded by black borders and 400V class are developed upon receipt of order.

*1 The maximum speed is 2400r/min.

*2 80% output in the high-speed range. (The output is reduced when the speed is 2400r/min or more.)

2.5 Power-off and magnetic contactor (MC)

(1) Inverter input side magnetic contactor (MC)

On the inverter input side, it is recommended to provide an MC for the following purposes.

(Refer to *page 3* for selection.)

1) To release the inverter from the power supply when the inverter's protective function is activated or when the drive is not functioning (e.g. emergency stop operation).
   When cycle operation or heavy-duty operation is performed with an optional brake resistor connected, overheat and burnout of the electrical-discharge resistor can be prevented if a regenerative brake transistor is damaged due to insufficient heat capacity of the electrical-discharge resistor and excess regenerative brake duty.
2) To prevent any accident due to an automatic restart at restoration of power after an inverter stop made by a power failure
3) To reset the inverter for an extended period of time
   The control power supply for inverter is always running and consumes a little power. When stopping the inverter for an extended period of time, powering off the inverter will save power slightly.
4) To separate the inverter from the power supply to ensure safe maintenance and inspection work
   The inverter's input side MC is used for the above purpose, select class JEM1038-AC3MC for the inverter input side current when making an emergency stop during normal operation.

REMARKS

Since repeated inrush currents at power on will shorten the life of the converter circuit (switching life is about 1,000,000 times. (For the 200V class 37K or more, switching life is about 500,000)), frequent starts and stops of the MC must be avoided. Turn on/off the inverter start controlling terminals (STF, STR) to run/stop the inverter.

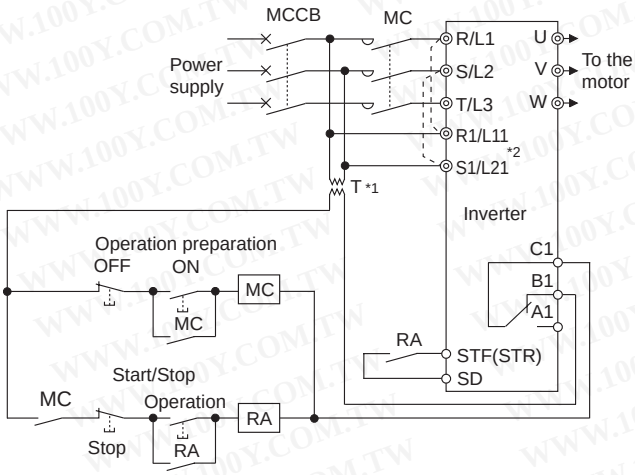

• Inverter start/stop circuit example

As shown on the left, always use the start signal (ON or OFF across terminals STF or STR-SD) to make a start or stop.

*1 When the power supply is 400V class, install a step-down transformer.

*2 Connect the power supply terminals R1/L11, S1/L21 of the control circuit to the primary side of the MC to hold an alarm signal when the inverter's protective circuit is activated. At this time, remove jumpers across terminals R/L1-R1/L11 and S/L2-S1/L21. (Refer to *page 18* for removal of the jumper.)

(2) Handling of the inverter output side magnetic contactor

Switch the magnetic contactor between the inverter and motor only when both the inverter and motor are at a stop. When the magnetic contactor is turned on while the inverter is operating, overcurrent protection of the inverter and such will activate. When an MC is provided to switch to a commercial power supply, for example, it is recommended to use commercial power supply-inverter switchover operation *Pr. 135 to Pr. 139 (Instruction Manual (applied))*.

勝 特 力 材 料 886-3-5753170
胜特力电子(上海) 86-21-34970699
胜特力电子(深圳) 86-755-83298787
Http://www.100y.com.tw

勝 特 力 材 料 886-3-5753170
胜特力电子(上海) 86-21-34970699
胜特力电子(深圳) 86-755-83298787
Http://www.100y.com.tw

2.6 Precautions for use of the inverter

The FR-A700 series is a highly reliable product, but incorrect peripheral circuit making or operation/handling method may shorten the product life or damage the product.
Before starting operation, always recheck the following items.

(1) Use crimping terminals with insulation sleeve to wire the power supply and motor.

(2) Application of power to the output terminals (U, V, W) of the inverter will damage the inverter. Never perform such wiring.

(3) After wiring, wire offcuts must not be left in the inverter.
Wire offcuts can cause an alarm, failure or malfunction. Always keep the inverter clean. When drilling mounting holes in an enclosure etc., take care not to allow chips and other foreign matter to enter the inverter.

(4) Use cables of the size to make a voltage drop 2% maximum.
If the wiring distance is long between the inverter and motor, a main circuit cable voltage drop will cause the motor torque to decrease especially at the output of a low frequency.
Refer to *page 15* for the recommended cable sizes.

(5) The overall wiring length should be 500m maximum.
(The wiring length should be 100m maximum for vector control.)
Especially for long distance wiring, the fast-response current limit function may be reduced or the equipment connected to the inverter output side may malfunction or become faulty under the influence of a charging current due to the stray capacity of the wiring. Therefore, note the overall wiring length. *(Refer to page 17.)*

(6) Electromagnetic wave interference
The input/output (main circuit) of the inverter includes high frequency components, which may interfere with the communication devices (such as AM radios) used near the inverter. In this case, set the EMC filter valid to minimize interference. *(Refer to page 9)*

(7) Do not install a power factor correction capacitor, surge suppressor or radio noise filter on the inverter output side.
This will cause the inverter to trip or the capacitor, and surge suppressor to be damaged. If any of the above devices is installed, immediately remove it.

(8) Before starting wiring or other work after the inverter is operated, wait for at least 10 minutes after the power supply has been switched off, and check that there are no residual voltage using a tester or the like. The capacitor is charged with high voltage for some time after power off and it is dangerous.

(9) A short circuit or earth (ground) fault on the inverter output side may damage the inverter modules.
- Fully check the insulation resistance of the circuit prior to inverter operation since repeated short circuits caused by peripheral circuit inadequacy or an earth (ground) fault caused by wiring inadequacy or reduced motor insulation resistance may damage the inverter modules.
- Fully check the to-earth (ground) insulation and inter-phase insulation of the inverter output side before power-on. Especially for an old motor or use in hostile atmosphere, securely check the motor insulation resistance etc.

(10) Do not use the inverter input side magnetic contactor to start/stop the inverter.
Always use the start signal (ON/OFF of STF and STR signals) to start/stop the inverter. *(Refer to page 8)*

(11) Across P/+ and PR terminals, connect only an external regenerative brake discharge resistor.
Do not connect a mechanical brake.

(12) Do not apply a voltage higher than the permissible voltage to the inverter I/O signal circuits.
Contact to the inverter I/O signal circuits or opposite polarity may damage the I/O devices. Especially check the wiring to prevent the speed setting potentiometer from being connected incorrectly to short terminals 10E-5.

(13) Provide electrical and mechanical interlocks for MC1 and MC2 which are used for commercial power supply-inverter switch-over.
When the wiring is incorrect or if there is a commercial power supply-inverter switch-over circuit as shown on the right, the inverter will be damaged by leakage current from the power supply due to arcs generated at the time of switch-over or chattering caused by a sequence error.
(Commercial operation can not be performed with the vector dedicated motor (SF-V5RU, SF-THY).)

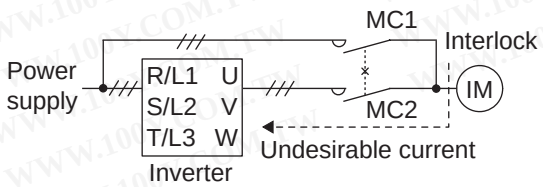

(14) If the machine must not be restarted when power is restored after a power failure, provide a magnetic contactor in the inverter's input side and also make up a sequence which will not switch on the start signal.
If the start signal (start switch) remains on after a power failure, the inverter will automatically restart as soon as the power is restored.

(15) Instructions for overload operation
When performing an operation of frequent start/stop with the inverter, rise/fall in the temperature of the transistor element of the inverter will repeat due to a continuous flow of large current, shortening the life from thermal fatigue. Since thermal fatigue is related to the amount of current, the life can be increased by reducing current at locked condition, starting current, etc. Decreasing current may increase the life. However, decreasing current will result in insufficient torque and the inverter may not start. Therefore, choose the inverter which has enough allowance for current (up to 2 rank larger in capacity).

(16) Make sure that the specifications and rating match the system requirements.

(17) A motor with encoder is necessary for vector control. In addition, connect the encoder directly to the backlash-free motor shaft. An encoder is not necessary for real sensorless vector control.

2.7 When using the high-duty brake resistor (FR-ABR)

- When the regenerative brake transistor is damaged, the wiring sequence as shown in the following diagrams is recommended to prevent overheating and burnout of the brake resistor.

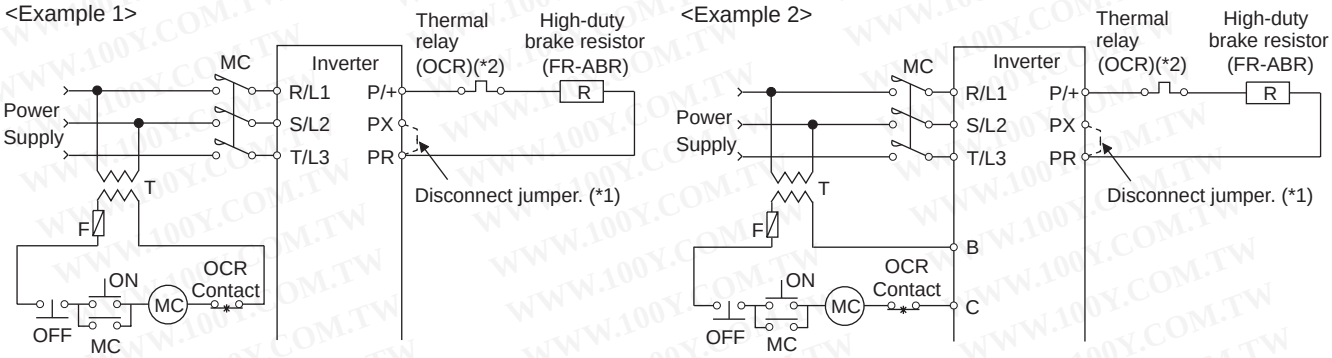

Note that the built-in brake resistor need not be removed. The leads of the built-in brake resistor need not be disconnected from the terminals.

*1 Remove the jumper from across the PR-PX terminals of the inverter. *1 This disables (switches off) the built-in brake resistor. When you use the 11K or more inverter, you need not remove the jumper since that inverter does not have the PX terminals. (Refer to the instruction manual of the inverter.)

*2 Refer to the following table for the thermal relay model number and to the following diagram for connection. (When using the 11K or more, always install a thermal relay.)

Power Supply Voltage	High-duty Brake Resistor	Thermal Relay Type (Mitsubishi product)	Contact Rating
200V	FR-ABR-0.4K	TH-N20CXHZ-0.7A	AC110V 5A, AC220V 2A(AC-11 class) DC110V 0.5A, DC220V 0.25A(DC-11 class)
	FR-ABR-0.75K	TH-N20CXHZ-1.3A	
	FR-ABR-2.2K	TH-N20CXHZ-2.1A	
	FR-ABR-3.7K	TH-N20CXHZ-3.6A	
	FR-ABR-5.5K	TH-N20CXHZ-5A	
	FR-ABR-7.5K	TH-N20CXHZ-6.6A	
	FR-ABR-11K	TH-N20CXHZ-11A	
	FR-ABR-15K	TH-N20CXHZ-11A	
	FR-ABR-22K	TH-N60-22A	
400V	FR-ABR-H0.4K	TH-N20CXHZ-0.24A	
	FR-ABR-H0.75K	TH-N20CXHZ-0.35A	
	FR-ABR-H2.2K	TH-N20CXHZ-0.9A	
	FR-ABR-H3.7K	TH-N20CXHZ-1.3A	
	FR-ABR-H5.5K	TH-N20CXHZ-2.1A	
	FR-ABR-H7.5K	TH-N20CXHZ-2.5A	
	FR-ABR-H11K	TH-N20CXHZ-6.6A	
	FR-ABR-H15K	TH-N20CXHZ-6.6A	

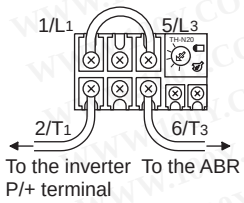

勝 特 力 材 料 886-3-5753170
胜特力电子(上海) 86-21-34970699
胜特力电子(深圳) 86-755-83298787
Http://www.100y.com.tw

3 DRIVE THE MOTOR

3.1 Step of operation

The inverter needs frequency command and start command. Turning the start command on start the motor rotating and the motor speed is determined by the frequency command (set frequency).
Refer to the flow chart below to perform setting.

勝 特 力 材 料 886-3-5753170
胜特力电子(上海) 86-21-34970699
胜特力电子(深圳) 86-755-83298787
Http://www.100y.com.tw

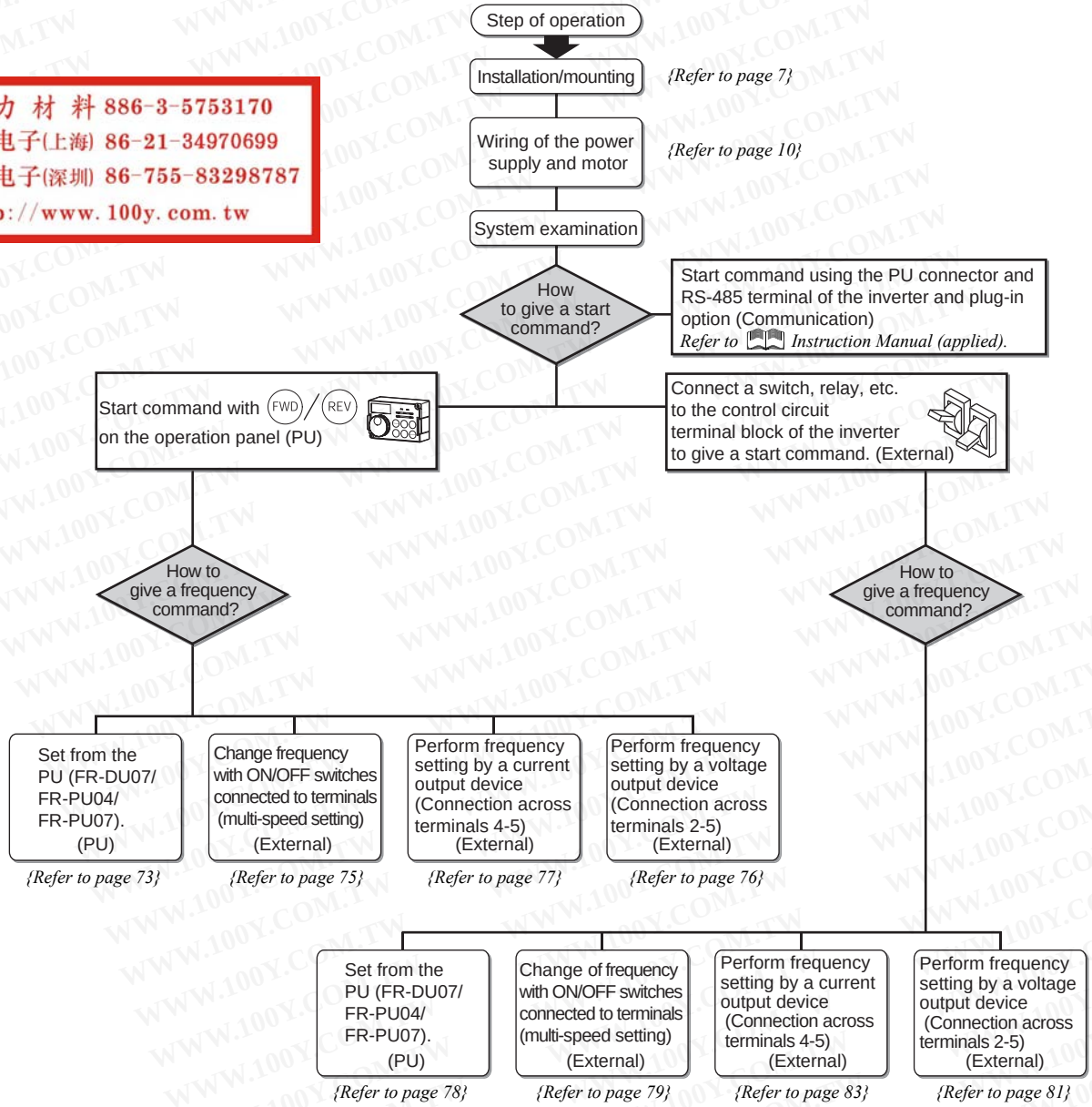

CAUTION

Check the following items before powering on the inverter.
- Check that the inverter is installed correctly in a correct place. *(Refer to page 7)*
- Check that wiring is correct. *(Refer to page 8)*
- Check that no load is connected to the motor.

- *When protecting the motor from overheat by the inverter, set Pr.9 Electronic thermal O/L relay (Refer to page 49)*
- *When the rated frequency of the motor is 50Hz, set Pr.3 Base frequency (Refer to page 50)*

3.2 Operation panel (FR-DU07)

3.2.1 Parts of the operation panel (FR-DU07)

勝 特 力 材 料 886-3-5753170
胜特力电子(上海) 86-21-34970699
胜特力电子(深圳) 86-755-83298787
Http://www.100y.com.tw

Operation mode indication
PU: Lit to indicate PU operation mode.
EXT: Lit to indicate external operation mode.
NET: Lit to indicate network operation mode.

Rotation direction indication
FWD: Lit during forward rotation
REV: Lit during reverse rotation
On: Forward/reverse operation
Flickering: When the frequency command is not given even if the forward/reverse command is given.

Unit indication
· Hz: Lit to indicate frequency.
· A: Lit to indicate current.
· V: Lit to indicate voltage.
(Flicker when the set frequency monitor is displayed.)

Monitor indication
Lit to indicate monitoring mode.

No function

Monitor(4-digit LED)
Shows the frequency, parameter number, etc.

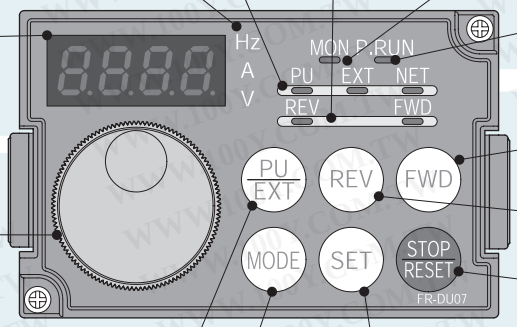

FWD **Start command forward rotation**

REV **Start command reverse rotation**

STOP RESET **Stop operation**
Alarms can be reset

Setting dial
(Setting dial: Mitsubishi inverter dial)
Used to change the frequency setting and parameter values.

SET
Used to set each setting.
If pressed during operation, monitor changes as below;

Running frequency → Output current → Output voltage *

* Energy saving monitor is displayed when the energy saving monitor of *Pr. 52* is set.

MODE
Mode switchover
Used to change each setting mode.

PU/EXT
Operation mode switchover
Used to switch between the PU and external operation mode.
When using the external operation mode (operation using a separately connected frequency setting potentiometer and start signal), press this key to light up the EXT indication. (Change the *Pr.79* value to use the combined mode.)
PU: PU operation mode
EXT: External operation mode

勝 特 力 材 料 886-3-5753170
胜特力电子(上海) 86-21-34970699
胜特力电子(深圳) 86-755-83298787
Http://www.100y.com.tw

3.2.2 Basic operation (factory setting)

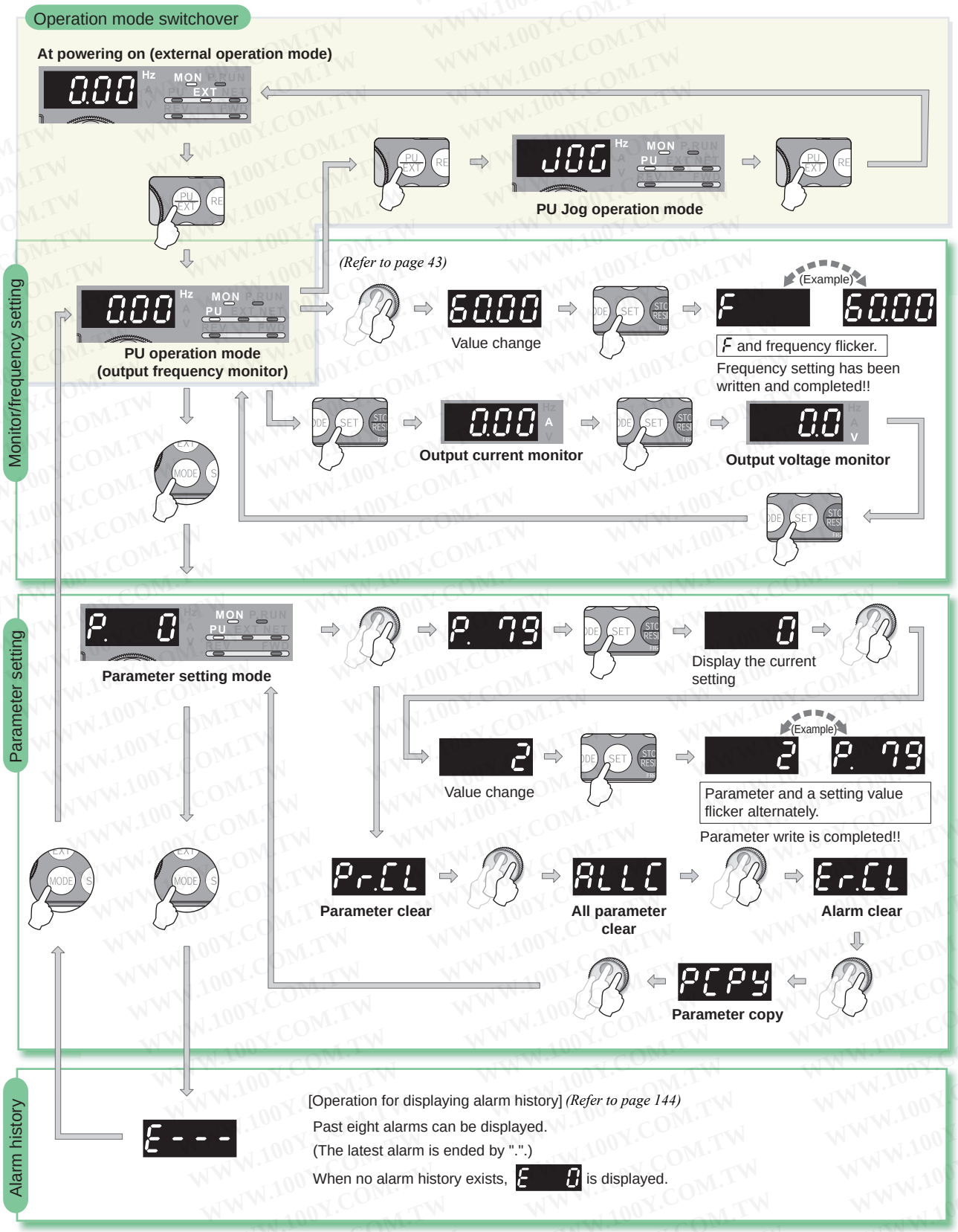

CAUTION

- Release the operation lock to release the PU stop by key operation.

3.2.3 Operation lock (Press [MODE] for an extended time (2s))

Operation using the setting dial and key of the operation panel can be made invalid to prevent parameter change and unexpected start and stop.

- Set "10 or 11" in *Pr. 161*, then press (MODE) for 2s to make the setting dial and key operation invalid.
- When the setting dial and key operation is made invalid, HOLd appears on the operation panel.

  When the setting dial and key operation is invalid, HOLd appears if the setting dial or key operation is performed. (When the setting dial or key operation is not performed for 2s, the monitor display appears.)
- To make the setting dial and key operation valid again, press (MODE) for 2s.

POINT

Set "10 or 11" (key lock mode valid) in *Pr.161 Frequency setting/key lock operation selection*.

Operation	Display
1. Screen at powering on The monitor display appears.	0.00 Hz MON EXT
2. Press (PU/EXT) to choose the PU operation mode.	(PU/EXT) ⇨ 0.00 PU EXT NET PU indication is lit.
3. Press (MODE) to choose the parameter setting mode.	(MODE) ⇨ P. 0 (The parameter number read previously appears.)
4. Turn (dial) until P. 161 (*Pr. 161*) appears.	(dial) ⇨ P. 161
5. Press (SET) to read the currently set value. "0" (initial value) appears.	(SET) ⇨ 0
6. Turn (dial) to change it to the setting value "10".	(dial) ⇨ 10
7. Press (SET) to set.	(SET) ⇨ 10 ⇄ P. 161 **Flicker ··· Parameter setting complete!!**
8. Press (MODE) for 2s to show the key lock mode.	(MODE) ⇨ HOLd Hz MON PU Press for 2s.

Functions valid even in the operation lock status

Stop and reset with (STOP/RESET) .

CAUTION

Release the operation lock to release the PU stop by key operation.

勝 特 力 材 料 886-3-5753170
胜特力电子(上海) 86-21-34970699
胜特力电子(深圳) 86-755-83298787
Http://www.100y.com.tw

3.2.4 Monitoring of output current and output voltage

POINT

Monitor display of output frequency, output current and output voltage can be changed by pushing (SET) during monitoring mode.

Operation	Display
1. Press (MODE) during operation to choose the output frequency monitor	
2. Independently of whether the inverter is running in any operation mode or at a stop, the output current monitor appears by pressing (SET).	(SET) ⇨
3. Press (SET) to show the output voltage monitor.	(SET) ⇨

3.2.5 First priority monitor

Hold down (SET) for 1s to set monitor description to be appeared first in the monitor mode.

(To return to the output frequency monitor, hold down (SET) for 1s after displaying the output frequency monitor.)

3.2.6 Setting dial push

Push the setting dial ( ) to display the set frequency currently set.

勝 特 力 材 料 886-3-5753170
胜特力电子(上海) 86-21-34970699
胜特力电子(深圳) 86-755-83298787
Http://www.100y.com.tw

3.2.7 Change the parameter setting value

Changing example | Change the *Pr. 1 Maximum frequency* .

Operation	Display
1. Screen at powering on The monitor display appears.	0.00 Hz MON EXT
2. Press PU/EXT to choose the PU operation mode.	PU/EXT ⇨ 0.00 PU EXT NET PU indication is lit.
3. Press MODE to choose the parameter setting mode.	MODE ⇨ P. 0 (The parameter number read previously appears.)
4. Turn ◎ until P. 1 (*Pr. 1*) appears.	◎ ⇨ P. 1
5. Press SET to read the currently set value. "120.0"(initial value) appears.	SET ⇨ 120.0 Hz
6. Turn ◎ to change it to the set value "60.00".	◎ ⇨ 60.00 Hz
7. Press SET to set.	SET ⇨ 60.00 Hz ↔ P. 1

Flicker ··· Parameter setting complete!!

- By turning ◎, you can read another parameter.
- Press SET to show the setting again.
- Press SET twice to show the next parameter.
- Press MODE twice to return the monitor to frequency monitor.

? Er 1 to Er 4 are displayed ... Why?

☞ Er 1 appears. .....Write disable error
Er 2 appears. .....Write error during operation
Er 3 appears. .....Calibration error
Er 4 appears. .....Mode designation error

For details refer to *page 131*.

勝 特 力 材 料 886-3-5753170
胜特力电子(上海) 86-21-34970699
胜特力电子(深圳) 86-755-83298787
Http://www.100y.com.tw

3.2.8 Parameter clear, all parameter clear

POINT

- Set "1" in *Pr. CL parameter clear* , *ALLC all parameter clear* to initialize all parameters. (Parameters are not cleared when "1" is set in *Pr. 77 Parameter write selection*.)
- Refer to the parameter list on *page 88* and later for parameters to be cleared with this operation.

Operation	Display
1. Screen at powering on The monitor display appears.	0.00 Hz MON EXT
2. Press PU/EXT to choose the PU operation mode.	PU indication is lit. 0.00 PU EXT NET
3. Press MODE to choose the parameter setting mode.	P. 0 (The parameter number read previously appears.)
4. Turn ◎ until "Pr.CL", "ALLC" appears.	Pr.CL ALLC Parameter clear All parameter clear
5. Press SET to read the currently set value. "0"(initial value) appears.	0
6. Turn ◎ clockwise to change it to the setting value of "1".	1
7. Press SET to set.	1 Pr.CL ALLC Parameter clear All parameter clear **Flicker ··· Parameter setting complete!!**

- Turn ◎ to read another parameter.
- Press SET to show the setting again.
- Press SET twice to show the next parameter.

? 1 and Er4 are displayed alternately ... Why?

☞ The inverter is not in the PU operation mode.

1. Press PU/EXT .

   PU is lit and the monitor (4 digit LED) displays "0" (*Pr. 79* = "0" (initial value)).
2. Carry out operation from step 6 again.

勝 特 力 材 料 886-3-5753170
胜特力电子(上海) 86-21-34970699
胜特力电子(深圳) 86-755-83298787
Http://www.100y.com.tw

3.2.9 Parameter copy and parameter verification

PCPY Setting	Description
0	Cancel
1	Copy the source parameters to the operation panel.
2	Write the parameters copied to the operation panel into the destination inverter.
3	Verify parameters in the inverter and operation panel. *(Refer to page 47 .)*

REMARKS

- When the copy destination inverter is not the FR-A700 series or parameter copy write is performed after parameter read is stopped, "model error (rE4)" is displayed.
- Refer to the parameter list on *page 88* and later for availability of parameter copy.
- When the power is turned off or an operation panel is disconnected, etc. during parameter copy write, perform write again or check the values by parameter verification.

(1) Parameter copy

Multiple inverters and parameter settings can be copied.

Operation — **Display**

1. Connect the operation panel to the copy source inverter.
   - **Connect it during a stop.**

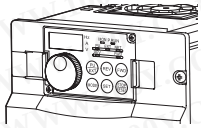

2. Press MODE to choose the parameter setting mode.

MODE ⇨ P. 0 (The parameter number previously read appears.)

3. Turn ◎ until PCPY (parameter copy) appears.

⇨ PCPY

4. Press SET to read the currently set value. "0"(initial value) appears.

SET ⇨ 0

5. Turn ◎ to change it to the setting value "1".

⇨ 1

6. Press SET to copy the source parameters to the operation panel.

SET ⇨ 1 (Flickers for about 30s)

About 30s later ⇨ 1 PCPY

Flicker ··· Parameter copy complete!!

7. Connect the operation panel to the copy source inverter.

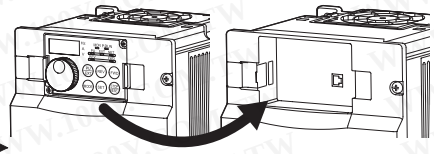

8. After performing steps 2 to 5, turn ◎ to change it to "2".

⇨ 2

9. Press SET to write the parameters copied to the operation panel to the destination inverter.

SET ⇨ 2 (The frequency flickers for about 30s)

10. When copy is completed, "2" and "PCPY" flicker.

⇨ 2 PCPY

Flicker ··· Parameter copy complete!!

11. After writing the parameter values to the copy destination inverter, always reset the inverter, e.g. switch power off once, before starting operation.

勝 特 力 材 料 886-3-5753170
胜特力电子(上海) 86-21-34970699
胜特力电子(深圳) 86-755-83298787
Http://www.100y.com.tw

? rE1 appears...Why? ☞ Parameter read error. Perform operation from step 3 again.

? rE2 appears...Why? ☞ Parameter write error. Perform operation from step 8 again.

? CP and 0.00 flicker alternately

☞ Appears when parameters are copied between the inverter of 55K or less and 75K or more.

1. Set "0" in *Pr. 160 User group read selection*.
2. Set the following setting (initial value) in *Pr. 989 Parameter copy alarm release*.

	55K or less	75K or more
Pr. 989 Setting	10	100

3. Reset *Pr. 9, Pr. 30, Pr. 51, Pr. 52, Pr. 54, Pr. 56, Pr. 57, Pr. 61, Pr. 70, Pr. 72, Pr. 80, Pr. 82, Pr. 90 to Pr. 94 , Pr. 158, Pr. 455, Pr. 458 to Pr. 462, Pr. 557, Pr. 859, Pr. 860, Pr. 893*.

勝 特 力 材 料 886-3-5753170
胜特力电子(上海) 86-21-34970699
胜特力电子(深圳) 86-755-83298787
Http://www.100y.com.tw

(2) Parameter verification

Whether same parameter values are set in other inverters or not can be checked.

Operation | **Display**

1. Replace the operation panel on the inverter to be verified.
   - **Replace it during a stop.**

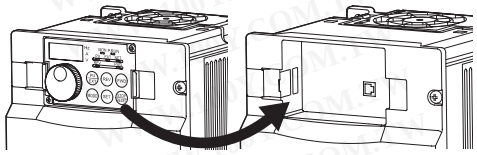

2. Screen at powering on
   The monitor display appears.

3. Press (MODE) to choose the parameter setting mode.

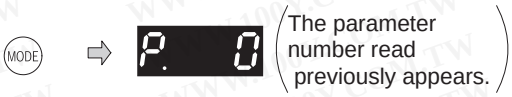

4. Turn ◎ until PCPY (parameter copy) appears.

5. Press (SET) to read the currently set value.
   "0"(initial value) appears.

6. Turn ◎ to change it to the set value "3"(parameter copy verification mode).

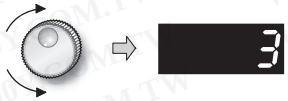

7. Press (SET) to read the parameter setting of the verified inverter to the operation panel.

   - If different parameters exist, different parameter numbers and rE3 flicker.

   - Hold down (SET) to verify.

8. It there is no difference, PCPY and 3 flicker to complete verification.

Flicker ··· Parameter verification complete!!

REMARKS

When the copy destination inverter is not the FR-A700 series, "model error (rE4)" is displayed.

? rE3 flickers ... Why?

☞ Set frequencies, etc. may be different. Check set frequencies.

勝 特 力 材 料 886-3-5753170
胜特力电子(上海) 86-21-34970699
胜特力电子(深圳) 86-755-83298787
Http://www.100y.com.tw

勝 特 力 材 料 886-3-5753170
胜特力电子(上海) 86-21-34970699
胜特力电子(深圳) 86-755-83298787
Http://www.100y.com.tw

3.3 Before operation

3.3.1 Simple mode parameter list

For simple variable-speed operation of the inverter, the initial setting of the parameters may be used as they are. Set the necessary parameters to meet the load and operational specifications. Parameter setting, change and check can be made from the operation panel (FR-DU07). For details of parameters, refer to *Instruction Manual (applied)*.

POINT

Only simple mode parameter can be displayed using *Pr.160 User group read selection*. (All parameters are displayed with the initial setting.) Set *Pr. 160 User group read selection* as required. (Refer to *page 43* for parameter change.)

Pr. 160	Description
9999	Only the simple mode parameters can be displayed.
0 (Initial Value)	Simple mode and extended mode parameters can be displayed.
1	Only the parameters registered in the user group can be displayed.

Parameter Number	Name	Increments	Initial Value	Range	Applications	Refer to
0	Torque boost	0.1%	6/4/3/2/1%*1	0 to 30%	Set to increase a starting torque or when the motor with a load will not rotate, resulting in an alarm [OL] and a trip [OC1] *1 The initial value differs according to the inverter capacity. (0.4K, 0.75K/1.5K to 3.7K/5.5K, 7.5K/11K to 55K/75K or more)	51
1	Maximum frequency	0.01Hz	120/60Hz*2	0 to 120Hz	Set when the maximum output frequency need to be limited. *2 The initial value differs according to the inverter capacity. (55K or less/75K or more)	52
2	Minimum frequency	0.01Hz	0Hz	0 to 120Hz	Set when the minimum output frequency need to be limited.	52
3	Base frequency	0.01Hz	60Hz	0 to 400Hz	Set when the rated motor frequency is 50Hz. Check the motor rating plate.	50
4	Multi-speed setting (high speed)	0.01Hz	60Hz	0 to 400Hz	Set when changing the preset speed in the parameter with a terminal.	79
5	Multi-speed setting (middle speed)	0.01Hz	30Hz	0 to 400Hz		
6	Multi-speed setting (low speed)	0.01Hz	10Hz	0 to 400Hz		
7	Acceleration time	0.1s	5/15s*3	0 to 3600s	Acceleration/deceleration time can be set. *3 The initial value differs according to the inverter capacity. (7.5K or less/11K or more)	53
8	Deceleration time	0.1s	5/15s*3	0 to 3600s		
9	Electronic thermal O/L relay	0.01/0.1A*4	Rated inverter output current	0 to 500/0 to 3600A*4	Protect the motor from overheat by the inverter. Set the rated motor current. *4 The increments and setting range differ according to the inverter capacity. (55K or less/75K or more)	49
79	Operation mode selection	1	0	0, 1, 2, 3, 4, 6, 7	Select the operation command location and frequency command location.	54
125	Terminal 2 frequency setting gain frequency	0.01Hz	60Hz	0 to 400Hz	Frequency for the maximum value of the potentiometer (5V initial value) can be changed.	82
126	Terminal 4 frequency setting gain frequency	0.01Hz	60Hz	0 to 400Hz	Frequency for the maximum current input (20mA initial value) can be changed.	84
160	User group read selection	1	0	0, 1, 9999	Parameter which can be read from the operation panel and parameter unit can be restricted.	—

3.3.2 Overheat protection of the motor by the inverter (Pr. 9)

Set this parameter when using a motor other than the Mitsubishi standard motor (SF-JR) and Mitsubishi constant torque motor (SF-HRCA).
Set the rated motor current in *Pr. 9 Electronic thermal O/L relay* to protect the motor from overheat.

Parameter Number	Name	Initial Value	Setting Range *2		Description
9	Electronic thermal O/L relay	Rated inverter output current *1	55K or less	0 to 500A	Set the rated motor current.
			75K or more	0 to 3600A	

*1 Refer to *page 157* for the rated inverter current value.
The initial values of the 0.4K and 0.75K are set to 85% of the rated inverter current.
*2 The minimum setting increments are 0.01A for the 55K or less and 0.1A for the 75K or more.

Changing example — Change the *Pr. 9 Electronic thermal O/L relay* setting to 8.5A according to the motor rated current. (FR-A720-1.5K)

Operation	Display
1. Screen at powering on The monitor display appears.	0.00 Hz MON P.RUN EXT PU NET REV FWD
2. Press PU/EXT to choose the PU operation mode.	PU/EXT ⇨ PU indication is lit. 0.00 PU EXT NET
3. Press MODE to choose the parameter setting mode.	MODE ⇨ P. 0 (The parameter number read previously appears.)
4. Turn ◎ until *Pr. 9 Electronic thermal O/L relay* appears.	◎ ⇨ P. 9
5. Press SET to show the currently set value. (8A for FR-A720-1.5K)	SET ⇨ 8.00 (Refer to *page 157* for initial value of the inverter rated current.)
6. Turn ◎ to change the set value to "8.50". (8.5A)	◎ ⇨ 8.50
7. Press SET to set.	SET ⇨ 8.50 ↔ P. 9

Flicker ··· Parameter setting complete!!

- By turning ◎, you can read another parameter.
- Press SET to show the setting again.
- Press SET twice to show the next parameter.

CAUTION

- Protective function by electronic thermal relay function is reset by inverter power reset and reset signal input. Avoid unnecessary reset and power-off.
- When two or more motors are connected to the inverter, they cannot be protected by the electronic thermal relay function. Install an external thermal relay to each motor.
- When the difference between the inverter and motor capacities is large and the setting is small, the protective characteristics of the electronic thermal relay function will be deteriorated. In this case, use an external thermal relay.
- A special motor cannot be protected by the electronic thermal relay function. Use an external thermal relay.
- PTC thermistor output built-in the motor can be input to the PTC signal (AU terminal). For details, refer to *Instruction Manual (applied)*.

勝 特 力 材 料 886-3-5753170
胜特力电子(上海) 86-21-34970699
胜特力电子(深圳) 86-755-83298787
Http://www.100y.com.tw

3.3.3 When the rated motor frequency is 50Hz (Pr. 3) V/F

First, check the motor rating plate. If a frequency given on the rating plate is "50Hz" only, always set *Pr. 3 Base frequency* to "50Hz". Leaving the base frequency unchanged from "60Hz" may make the voltage low and the torque insufficient. It may result in an inverter trip (E.OC☐) due to overload.

Parameter Number	Name	Initial Value	Setting Range	Description
3	**Base frequency**	60Hz	0 to 400Hz	Set the frequency when the motor rated torque is generated.

Changing example Change *Pr. 3 Base frequency* to 50Hz according to the motor rated frequency.

Operation — **Display**

1. Screen at powering on
   The monitor display appears.

2. Press PU/EXT to choose the PU operation mode.

PU indication is lit.

3. Press MODE to choose the parameter setting mode.

(The parameter number read previously appears.)

4. Turn ◎ until *Pr. 3 Base frequency* appears.

5. Press SET to show the currently set value. (60Hz)

6. Turn ◎ to change it to the set value "50.0". (50Hz)

7. Press SET to set.

Flicker ··· Parameter setting complete!!

- By turning ◎, you can read another parameter.
- Press SET to show the setting again.
- Press SET twice to show the next parameter.

REMARKS

- *Pr. 3* is invalid under advanced magnetic flux vector control, real sensorless vector control, and vector control and *Pr.84 Rated motor frequency* is valid.

勝 特 力 材 料 886-3-5753170
胜特力电子(上海) 86-21-34970699
胜特力电子(深圳) 86-755-83298787
Http://www.100y.com.tw

3.3.4 Increase the starting torque (Pr. 0) V/F

Set this parameter when "the motor with a load will not rotate", "an alarm [OL] is output, resulting in an inverter trip due to [OC1], etc.

Parameter Number	Name	Initial Value		Setting Range	Description
0	Torque boost	0.4K, 0.75K	6%	0 to 30%	Motor torque in the low-frequency range can be adjusted to the load to increase the starting motor torque.
		1.5K to 3.7K	4%		
		5.5K, 7.5K	3%		
		11K to 55K	2%		
		75K or more	1%		

Changing example

When the motor with a load will not rotate, increase the *Pr. 0* value 1% by 1% unit by looking at the motor movement. (The guideline is for about 10% change at the greatest.)

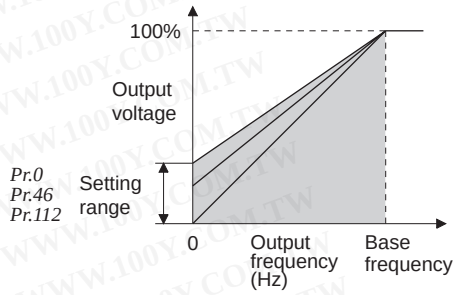

勝 特 力 材 料 886-3-5753170
胜特力电子(上海) 86-21-34970699
胜特力电子(深圳) 86-755-83298787
Http://www.100y.com.tw

Operation	Display
1. Screen at powering on The monitor display appears.	0.00 Hz MON EXT
2. Press PU/EXT to choose the PU operation mode.	PU indication is lit. 0.00 PU EXT NET
3. Press MODE to choose the parameter setting mode.	P. 0 (The parameter number read previously appears.)
4. Turn ◎ until P. 0 (*Pr. 0*) appears.	P. 0
5. Press SET to read the currently set value. "6.0"(initial value is 6% for the 0.75K) appears.	6.0 (The initial value differs according to the capacity.)
6. Turn ◎ to change it to the set value "7.0".	7.0
7. Press SET to set.	7.0 ↔ P. 0

Flicker ··· Parameter setting complete!!

- By turning ◎, you can read another parameter.
- Press SET to show the setting again.
- Press SET twice to show the next parameter.

REMARKS

- A too large setting may cause the motor to overheat, resulting in an overcurrent shut-off (OL (overcurrent alarm) then E.OC1 (overcurrent shutoff during acceleration)), overload shut-off (E.THM (motor overload shutoff), and E.THT (inverter overload shutoff)). (When a protective function occurs, release the start command, and decrease the *Pr. 0* setting 1% by 1% to reset. *(Refer to page 43)*

POINT

If the inverter still does not operate properly after the above measures, adjust *Pr. 80*, *Pr. 81* (Advanced magnetic flux vector control), *Pr.800* (Real sensorless vector control). The *Pr.0* setting is invalid under advanced magnetic flux vector control, real sensorless vector control and vector control. *(Refer to Instruction Manual (applied).)*

3.3.5 Limit the maximum and minimum output frequency (Pr. 1, Pr. 2)

Motor speed can be limitted.

Parameter Number	Name	Initial Value		Setting Range	Description
1	**Maximum frequency**	55K or less	120Hz	0 to 120Hz	Set the upper limit of the output frequency.
		75K or more	60Hz		
2	**Minimum frequency**	0Hz		0 to 120Hz	Set the lower limit of the output frequency.

Changing example

Limit the frequency set by the potentiometer, etc. to 60Hz maximum.
(Set "60"Hz in *Pr. 1 Maximum frequency*.)

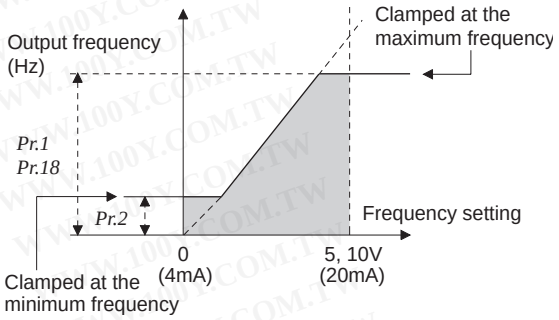

勝 特 力 材 料 886-3-5753170
胜特力电子(上海) 86-21-34970699
胜特力电子(深圳) 86-755-83298787
Http://www.100y.com.tw

Operation	Display
1. Screen at powering on The monitor display appears.	0.00 Hz MON EXT
2. Press PU/EXT to choose the PU operation mode.	PU indication is lit. 0.00 PU EXT NET
3. Press MODE to choose the parameter setting mode.	P. 0 (The parameter number read previously appears.)
4. Turn ◎ until P. 1 (*Pr. 1*) appears.	P. 1
5. Press SET to read the currently set value. "120.0"(initial value) appears.	120.0 Hz
6. Turn ◎ to change it to the set value "60.00".	60.00 Hz
7. Press SET to set.	60.00 Hz ⇄ P. 1

Flicker ··· Parameter setting complete!!

- By turning ◎, you can read another parameter.
- Press SET to show the setting again.
- Press SET twice to show the next parameter.

REMARKS

- The output frequency is clamped by the *Pr. 2* setting even if the set frequency is lower than the *Pr. 2* setting (The frequency will not decrease to the *Pr. 2* setting.)
  Note that *Pr. 15 Jog frequency* has higher priority than the minimum frequency.
- When the *Pr. 1* setting is changed, frequency higher than the *Pr. 1* setting can not be set by ◎.
- When performing a high speed operation at 120Hz or more, setting of *Pr. 18 High speed maximum frequency* is necessary.
  (Refer to Instruction Manual (applied).)

⚠ CAUTION

⚠ If the *Pr. 2* setting is higher than the *Pr. 13 Starting frequency* value, note that the motor will run at the set frequency according to the acceleration time setting by merely switching the start signal on, without entry of the command frequency.

3.3.6 Change acceleration and deceleration time (Pr. 7, Pr. 8)

Set in *Pr. 7 Acceleration time* a larger value for a slower speed increase and a smaller value for a faster speed increase.
Set in *Pr. 8 Deceleration time* a larger value for a slower speed decrease and a smaller value for a faster speed decrease.

Parameter Number	Name	Initial Value		Setting Range	Description
7	Acceleration time	7.5K or less	5s	0 to 3600/ 360s *	Set the motor acceleration time.
		11K or more	15s		
8	Deceleration time	7.5K or less	5s	0 to 3600/ 360s *	Set the motor deceleration time.
		11K or more	15		

* Depends on the *Pr. 21 Acceleration/deceleration time increments* setting. The initial value for the setting range is "0 to 3600s" and setting increments is "0.1s".

Changing example — Change the *Pr. 7 Acceleration time* setting from "5s" to "10s".

勝 特 力 材 料 886-3-5753170
胜特力电子(上海) 86-21-34970699
胜特力电子(深圳) 86-755-83298787
Http://www.100y.com.tw

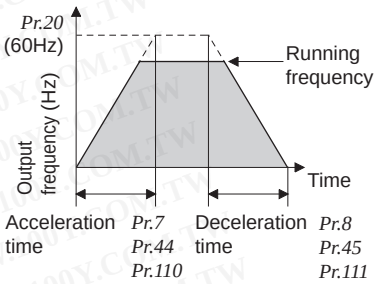

Operation	Display
1. Screen at powering on The monitor display appears.	0.00 Hz MON EXT
2. Press PU/EXT to choose the PU operation mode.	PU indication is lit. 0.00 PU EXT NET
3. Press MODE to choose the parameter setting mode.	P. 0 (The parameter number read previously appears.)
4. Turn ◎ until P. 7 (*Pr. 7*) appears.	P. 7
5. Press SET to read the currently set value. "5.0"(initial value) appears.	5.0 (The initial value differs according to the capacity.)
6. Turn ◎ to change it to the set value "10.0".	10.0
7. Press SET to set.	10.0 ↔ P. 7

Flicker ··· Parameter setting complete!!

- By turning ◎, you can read another parameter.
- Press SET to show the setting again.
- Press SET twice to show the next parameter.

3.3.7 Selection of the start command and frequency command locations (Pr. 79)

Select the start command location and frequency command location.

Parameter Number	Name	Initial Value	Setting Range	Description	LED Indication ▭: Off ▭: On
79	Operation mode selection	0	0	Use external/PU switchover mode (press PU/EXT to switch between the PU and external operation mode. *(Refer to page 73)*) At power on, the inverter is in the external operation mode.	External operation mode PU EXT NET PU operation mode PU EXT NET
			1	Fixed to PU operation mode	PU EXT NET
			2	Fixed to external operation mode Operation can be performed by switching between the external and NET operation mode.	External operation mode PU EXT NET NET operation mode PU EXT NET
			3	External/PU combined operation mode 1 **Running frequency**: PU (FR-DU07/FR-PU04/FR-PU07) setting or external signal input (multi-speed setting, across terminals 4-5 (valid when AU signal turns on)). **Start signal**: External signal input (terminal STF, STR)	PU EXT NET
			4	External/PU combined operation mode 2 **Running frequency**: External signal input (Terminal 2, 4, 1, JOG, multi-speed selection, etc.) **Start signal**: Input from the PU (FR-DU07/FR-PU04/FR-PU07) (FWD, REV)	
			6	Switchover mode Switch among PU operation, external operation, and NET operation while keeping the same operation status.	PU operation mode PU EXT NET External operation mode PU EXT NET NET operation mode PU EXT NET
			7	External operation mode (PU operation interlock) X12 signal ON* Operation mode can be switched to the PU operation mode. (output stop during external operation) X12 signal OFF* Operation mode can not be switched to the PU operation mode.	PU operation mode PU EXT NET External operation mode PU EXT NET

* For the terminal used for the X12 signal (PU operation interlock signal) input, set "12" in *Pr. 178 to Pr. 189 (input terminal function selection)* to assign functions.

For *Pr. 178 to Pr. 189*, refer to *Instruction Manual (applied)*.
When the X12 signal is not assigned, function of the MRS signal switches from MRS (output stop) to PU operation interlock signal.

勝 特 力 材 料 886-3-5753170
胜特力电子(上海) 86-21-34970699
胜特力电子(深圳) 86-755-83298787
Http://www.100y.com.tw

勝 特 力 材 料 886-3-5753170
胜特力电子(上海) 86-21-34970699
胜特力电子(深圳) 86-755-83298787
Http://www.100y.com.tw

3.3.8 Large starting torque and low speed torque are necessary (advanced magnetic flux vector control, real sensorless vector control) (Pr. 71, Pr. 80, Pr. 81, Pr. 800)

Magnetic flux Sensorless

Advanced magnetic flux vector control can be selected by setting the capacity, poles and type of the motor used in *Pr. 80* and *Pr. 81*. When higher accuracy and fast response control is necessary, select the real sensorless vector control and perform offline auto tuning and online auto tuning.

- What is advanced magnetic flux vector control?
  The low speed torque can be improved by providing voltage compensation so that the motor current which meets the load torque to flow. Output frequency compensation (slip compensation) is made so that the motor actual speed approximates a speed command value. Effective when load fluctuates drastically, etc.
- What is real sensorless vector control?
  This function enables vector control with a general-purpose motor without encoder. It is suitable for applications below.
  · To minimize the speed fluctuation even at a severe load fluctuation
  · To generate low speed torque
  · To prevent machine from damage due to too large torque (torque limit)
  · To perform torque control

Parameter Number	Name	Initial Value	Setting Range		Description	
71	Applied motor	0	0 to 8, 13 to 18, 20, 23, 24, 30, 33, 34, 40, 43, 44, 50, 53, 54		By selecting a standard motor or constant torque motor, thermal characteristic and motor constants of each motor are set.	
80	Motor capacity	9999	55K or less	0.4 to 55kW	Set the applied motor capacity.	
			75K or more	0 to 3600kW		
			9999		V/F control	
81	Number of motor poles	9999	2, 4, 6, 8, 10		Set the number of motor poles.	
			12, 14, 16, 18, 20		X18 signal-ON:V/F control *	Set 10 + number of motor poles.
			9999		V/F control	
800	Control method selection	20	0 to 5		Vector control *(Refer to page 58)*	
			9		Vector control test operation	
			10		Speed control	Real sensorless vector control
			11		Torque control	
			12		MC signal-ON:torque MC signal-OFF:speed *	
			20		V/F control (advanced magnetic flux vector control)	

* Use *Pr. 178 to Pr. 189* to assign the terminals used for the X18 and MC signal. *(Refer to Instruction Manual (applied)).*

POINT

If the following conditions are not satisfied, select V/F control since malfunction such as insufficient torque and uneven rotation may occurr.

- The motor capacity should be equal to or one rank lower than the inverter capacity. (note that the capacity is 0.4kW or more)
- Motor to be used is either Mitsubishi standard motor, high efficiency motor (SF-JR, SF-HR two-pole, four-pole, six-pole 0.4kW or more) or Mitsubishi constant torque motor (SF-JRCA, SF-HRCA 200V class four-pole 0.4kW to 55kW). When using a motor other than the above (other manufacturer's motor), perform offline auto tuning without fail. (advanced magnetic flux vector control)
  When performing real sensorless vector control, offline auto tuning are necessary even when Mitsubishi motor is used.
- Single-motor operation (one motor run by one inverter) should be performed.
- The wiring length from inverter to motor should be within 30m. (Perform offline auto tuning in the state where actual wiring work is performed when the wiring length exceeds 30m.)

CAUTION

- Uneven rotation slightly increases as compared to the V/F control. (It is not suitable for machines such as grinding machine and wrapping machine which requires less uneven rotation at low speed.)
- When terminal assignment is changed using *Pr. 178 to Pr. 189 (input terminal function selection)* , other functions may be affected. Please make setting after confirming the function of each terminal.
- When advanced magnetic flux vector control is performed with a surge voltage suppression filter (FR-ASF-H) connected, output torque may decrease. In addition, do not use a sine wave filter (MT-BSL/BSC).
- Do not perform real sensorless vector control with a surge voltage suppression filter (FR-ASF-H) or sine wave filer (MT-BSL/BSC) connected.

<Selection method of advanced magnetic flux vector control>

Setting procedure

Perform secure wiring. *(Refer to page 8.)*

↓

Set the motor. *(Pr. 71) (Refer to page 55.)*

Motor		*Pr. 71* Setting *1	Remarks
Mitsubishi standard motor Mitsubishi high efficiency motor	SF-JR	0 (initial value)	
	SF-JR 4P-1.5kW or less	20	
	SF-HR	40	
	Others	3	Offline auto tuning is necessary.*2
Mitsubishi constant-torque motor	SF-JRCA 200V 4P	1	
	SF-HRCA 200V 4P	50	
	Others (SF-JRC, etc.)	13	Offline auto tuning is necessary. *2
Other manufacturer's standard motor	–	3	Offline auto tuning is necessary. *2
Other manufacturer's constant torque motor	–	13	Offline auto tuning is necessary. *2

*1 For other settings of *Pr. 71* , refer to 📖 *Instruction Manual (applied)*.
*2 Refer to *page 63* for offline auto tuning.

↓

Set the motor capacity and the number of motor poles according as required.
(Pr. 80, Pr. 81) (Refer to page 55.)

↓

Set the motor capacity (kW) in *Pr. 80 Motor capacity* and set the number of motor poles (number of poles) in *Pr. 81 Number of motor poles*. (V/F control is performed when the setting is "9999" (initial value).

Set the run command. *(Refer to page 73.)*

↓

Select the start command and speed command.
(1) Start command
1) Operation panel: Setting by pressing FWD/REV of the operation panel
2) External command: Setting by forward rotation or reverse rotation command (terminal STF or STR)
(2)Speed command
1) Operation panel: Setting by pressing ◎ of the operation panel
2) External analog command (terminal 2 or 4) :
Give a speed command using the analog signal input to terminal 2 (or terminal 4).
3) Multi-speed command:
The external signals (RH, RM, RL) may also be used to give speed command.

勝 特 力 材 料 886-3-5753170
胜特力电子(上海) 86-21-34970699
胜特力电子(深圳) 86-755-83298787
Http://www.100y.com.tw

↓

Test run

As required

- Perform offline auto tuning. *(Pr.96) (refer to page 63).*
- Select online auto tuning. *(Pr.95) (refer to page 67).*

REMARKS

- When higher accuracy operation is necessary, set online auto tuning after performing offline auto tuning and select real sensorless vector control.
- Use *Pr. 89* to adjust the motor speed fluctuation at load fluctuation. *(Refer to 📖 Instruction Manual (applied).)*

<Selection method of real sensorless vector control (speed control)>

Speed control is exercised to match the speed command and actual motor speed.

Setting procedure

Perform secure wiring. *(Refer to page 8.)*

↓

Set the motor. *(Pr. 71) (Refer to page 55.)*

Set "3" (standard motor) or "13" (constant torque motor) in *Pr. 71 Applied motor*.

↓

Set the motor capacity and the number of motor poles according as required. *(Pr. 80, Pr. 81) (Refer to page 55.)*

Set the motor capacity (kW) in *Pr. 80 Motor capacity* and set the number of motor poles (number of poles) in *Pr. 81 Number of motor poles*. (V/F control is performed when the setting is "9999" (initial value).

↓

Select a control method. *(Refer to page 55.)*

Make speed control valid by selecting "10" (speed control) or "12" (speed-torque switchover) for *Pr. 800*.

↓

Set the run command. *(Refer to page 73.)*

Select the start command and speed command.

(1) Start command

1) Operation panel: Setting by pressing FWD/REV of the operation panel
2) External command: Setting by forward rotation or reverse rotation command (terminal STF or STR)

(2)Speed command

1) Operation panel: Setting by pressing of the operation panel
2) External analog command (terminal 2 or 4) :
Give a speed command using the analog signal input to terminal 2 (or terminal 4).
3) Multi-speed command:
The external signals (RH, RM, RL) may also be used to give speed command.

↓

Set the torque limit. *(Pr. 810)*
(Refer to Instruction Manual (applied).)

↓

Perform offline auto tuning. *(Pr. 96) (Refer to page 63.)*

↓

Test run

勝 特 力 材 料 886-3-5753170
胜特力电子(上海) 86-21-34970699
胜特力电子(深圳) 86-755-83298787
Http://www.100y.com.tw

As required

- Select online auto tuning. *(Pr. 95) (refer to page 67.)*
- Easy gain tuning *(refer to page 68)*.
- Manual input speed control gain adjustment *(refer to page 70)*.

CAUTION

- Make sure to perform offline auto tuning before performing real sensorless vector control.
- The carrier frequencies are selectable from among 2k, 6k, 10k, 14kHz for real sensorless vector control.
- Torque control can not be performed in the low speed region and at a low speed with light load. Choose vector control.
- Performing pre-excitation (LX signal and X13 signal) under torque control may start the motor running at a low speed even when the start command (STF or STR) is not input. The motor may run also at a low speed when the speed limit value=0 with a start command input. Perform pre-excitation after making sure that there will be no problem in safety if the motor runs.
- Do not switch between the STF (forward rotation command) and STR (reverse rotation command) during operation under torque control. Overcurrent shut-off error (E.OC□) or opposite rotation deceleration error (E.11) occurs.
- For the 0.4K to 3.7K, the speed deviation may become large at 20Hz or less and torque may become insufficient in the low speed region under 1Hz during continuous operation under real sensorless vector control. In such case, stop operation once and reaccelerate to improve the problems.
- When the inverter is likely to start during motor coasting under real sensorless vector control, set to make frequency search of automatic restart after instantaneous power failure valid (*Pr. 57* ≠ "9999", *Pr. 162* = "10").

3.3.9 Higher accuracy operation using a motor with encoder (Vector control) (Pr.71, Pr.80, Pr.81, Pr.359, Pr.369, Pr.800) Vector

Full-scale vector control can be performed fitting the FR-A7AP and using a motor with encoder. Fast response/ high accuracy speed control (zero speed control, servo lock), torque control, and position control can be performed.

- What is vector control?
  Excellent control characteristics when compared to V/F control and other control techniques, achieving the control characteristics equal to those of DC machines.
  It is suitable for applications below.
  · To minimize the speed fluctuation even at a severe load fluctuation
  · To generate low speed torque
  · To prevent machine from damage due to too large torque (torque limit)
  · To perform torque control or position control
  · Servo-lock torque control which generates a torque at zero speed (i.e. status of motor shaft = stopped)

Parameter Number	Name	Initial Value	Setting Range		Description	
71	Applied motor	0	0 to 8, 13 to 18, 20, 23, 24, 30, 33, 34, 40, 43, 44, 50, 53, 54		By selecting a standard motor or constant torque motor, thermal characteristic and motor constants of each motor are set.	
80	Motor capacity	9999	55K or less	0.4 to 55kW	Set the applied motor capacity.	
			75K or more	0 to 3600kW		
			9999		V/F control	
81	Number of motor poles	9999	2, 4, 6, 8, 10		Set the number of motor poles.	
			12, 14, 16, 18, 20		X18 signal-ON:V/F control *	Set 10 + number of motor poles.
			9999		V/F control	
359	Encoder rotation direction	1	0		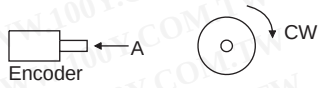 Clockwise direction as viewed from A is forward rotation	
			1		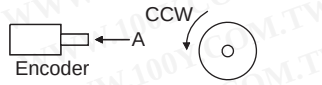 Counter clockwise direction as viewed from A is forward rotation	
369	Number of encoder pulses	1024	0 to 4096		Set the number of pulses of the encoder. Set the number of pulses before multiplied by four.	
800	Control method selection	20	0		Speed control	Vector control
			1		Torque control	
			2		MC signal-ON:torque MC signal-OFF:speed *	
			3		Position control	
			4		MC signal-ON:position MC signal-OFF:speed *	
			5		MC signal-ON:torque MC signal-OFF:position *	
			9		Vector control test operation *(Refer to Instruction Manual (applied))*	
			10 to 12		Real sensorless vector control *(Refer to page 57)*	
			20		V/F control (advanced magnetic flux vector control)	

* Use *Pr. 178 to Pr. 189* to assign the terminals used for the X18 and MC signal. *(Refer to Instruction Manual (applied))*.

勝 特 力 材 料 886-3-5753170
胜特力电子(上海) 86-21-34970699
胜特力电子(深圳) 86-755-83298787
Http://www.100y.com.tw

POINT

If the conditions below are not satisfied, malfunction such as insufficient torque and uneven rotation may occur.

- The motor capacity should be equal to or one rank lower than the inverter capacity. (note that the capacity is 0.4kW or more)
- Motor to be used is either Mitsubishi standard motor with encoder, high efficiency motor (SF-JR, SF-HR two-pole, four-pole, six-pole 0.4kW or more) or Mitsubishi constant torque motor (SF-JRCA, SF-HRCA 200V class four-pole 0.4kW to 55kW) or vector control dedicated motor (SF-V5RU). When using a motor other than the above (other manufacturer's motor), perform offline auto tuning without fail.
- Single-motor operation (one motor run by one inverter) should be performed.
- Wiring length from inverter to motor should be within 30m. (Perform offline auto tuning in the state where wiring work is performed when the wiring length exceeds 30m.)

CAUTION

- Changing the terminal assignment using *Pr. 178 to Pr. 189 (input terminal function selection)* may affect the other functions. Make setting after confirming the function of each terminal.
- Do not perform vector control with a surge voltage suppression filter (FR-ASF-H) or sine wave filer (MT-BSL/BSC) connected.

勝 特 力 材 料 886-3-5753170
胜特力电子(上海) 86-21-34970699
胜特力电子(深圳) 86-755-83298787
Http://www.100y.com.tw

<Selection method of speed control>

Speed control is exercised to match the speed command and actual motor speed.

Setting procedure

Perform secure wiring. *(Refer to page 31.)*

Mount the FR-A7AP.

Set the motor and encoder. *(Pr. 71, Pr.359, Pr.369)*

Set *Pr.71 Applied motor*, *Pr.359 Encoder rotation direction* and *Pr.369 Number of encoder pulses* according to the motor and encoder used. *(Refer to page 33.)*

Set the motor capacity and the number of motor poles according as required. *(Pr. 80, Pr. 81) (Refer to page 58.)*

Set the motor capacity (kW) in *Pr. 80 Motor capacity* and set the number of motor poles (number of poles) in *Pr. 81 Number of motor poles*. (V/F control is performed when the setting is "9999" (initial value).

Select a control method. *(Refer to page 58.)*

Make speed control valid by selecting "0" (speed control), "2" (speed-torque switchover), or "4" (speed-control switchover) for *Pr.800*.

Set the run command. *(Refer to page 74.)*

Select the start command and speed command.

(1) Start command

1) Operation panel: Setting by pressing FWD/REV of the operation panel
2) External command: Setting by forward rotation or reverse rotation command (terminal STF or STR)

(2)Speed command

1) Operation panel: Setting by pressing of the operation panel
2) External analog command (terminal 2 or 4) :
   Give a speed command using the analog signal input to terminal 2 (or terminal 4).
3) Multi-speed command:
   The external signals (RH, RM, RL) may also be used to give speed command.

Set the torque limit. *(Pr. 810)*
(Refer to Instruction Manual (applied).)

Test run

As required

- Perform offline auto tuning. *(Pr.96) (refer to page 63).*
- Select online auto tuning. *(Pr.95) (refer to page 67).*
- Easy gain tuning *(refer to page 68)*
- Manual input speed control gain adjustment *(refer to page 70)*

勝 特 力 材 料 886-3-5753170
胜特力电子(上海) 86-21-34970699
胜特力电子(深圳) 86-755-83298787
Http://www.100y.com.tw

<Selection method of torque control>

- Torque control is exercised to develop torque as set in the torque command.
- The motor speed becomes constant when the motor output torque and load torque are balanced. For torque control, therefore, the speed is determined by the load.
- For torque control, the motor gains speed as the motor output torque becomes greater than the motor load. To prevent overspeed, set the speed limit value so that the motor speed does not increase too high. (Speed control is exercised during speed limit and torque control is disabled.)
- When speed limit is not set, the speed limit value setting is regarded as 0Hz to disable torque control.

Setting procedure

Perform secure wiring. *(Refer to page 31.)*

↓ Mount the FR-A7AP.

Set the motor and encoder. *(Pr. 71, Pr.359, Pr.369)*

↓ Set *Pr.71 Applied motor*, *Pr.359 Encoder rotation direction* and *Pr.369 Number of encoder pulses* according to the motor and encoder used. *(Refer to page 33.)*

Set the motor capacity and the number of motor poles according as required. *(Pr. 80, Pr. 81) (Refer to page 58.)*

↓ Set the motor capacity (kW) in *Pr. 80 Motor capacity* and set the number of motor poles (number of poles) in *Pr. 81 Number of motor poles*. (V/F control is performed when the setting is "9999" (initial value).

Select a control method. *(Refer to page 58.)*

↓ Set either "1" (torque control), "2" (speed-torque switchover) or "5" (position-torque switchover) in *Pr.800* and make torque control valid.

Set the torque limit. *(Pr. 810)*
(Refer to 📖 Instruction Manual (applied).)

↓

Set the speed limit.. *(Pr. 807)*
(Refer to 📖 Instruction Manual (applied).)

↓

Test run

As required

- Perform offline auto tuning. *(Pr.96) (refer to page 63).*
- Select online auto tuning. *(Pr.95) (refer to page 67).*
- Manual input torque control gain adjustment *(refer to 📖 Instruction Manual (applied))*

勝 特 力 材 料 886-3-5753170
胜特力电子(上海) 86-21-34970699
胜特力电子(深圳) 86-755-83298787
Http://www.100y.com.tw

<Selection method of position control>

- In the position control, the speed command is calculated so that the difference between command pulse (or parameter setting) and the number of feedback pulses from the encoder is zero to run the motor.
- This inverter can perform conditional position feed by contact input and position control by inverter conditional pulse input.

Setting procedure

Perform secure wiring. *(Refer to page 32.)*

Mount the FR-A7AP.

Set the motor and encoder. *(Pr. 71, Pr.359, Pr.369)*

Set *Pr.71 Applied motor*, *Pr.359 Encoder rotation direction* and *Pr.369 Number of encoder pulses* according to the motor and encoder used. *(Refer to page 33.)*

Set the motor capacity and the number of motor poles according as required. *(Pr. 80, Pr. 81) (Refer to page 58.)*

Set the motor capacity (kW) in *Pr. 80 Motor capacity* and set the number of motor poles (number of poles) in *Pr. 81 Number of motor poles*. (V/F control is performed when the setting is "9999" (initial value).

Select a control method. *(Refer to page 58.)*

Make speed control valid by selecting "3" (speed control) "4" (speed-torque switchover) or "5" (position/torque switchover) for *Pr.800*.

Selection of position command source. *(Pr. 419)*

Position command by contact input
Set "0" in *Pr. 419* (initial value).

Position command by inverter pulse train input
Set "2" in *Pr. 419*.

Setting of parameter for position feed
(Pr.465 to Pr.494). (Pr. 465 to Pr.494)
(Refer to 📖 Instruction Manual (applied).)

Selection of command pulse form.
(Pr. 428)
(Refer to 📖 Instruction Manual (applied).)

Test run

As required

- Set the electronic gear. *(refer to 📖 Instruction Manual (applied))*
- Setting of positioning adjustment parameter *(refer to 📖 Instruction Manual (applied))*
- Gain adjustment of position control *(refer to 📖 Instruction Manual (applied))*

勝 特 力 材 料 886-3-5753170
胜特力电子(上海) 86-21-34970699
胜特力电子(深圳) 86-755-83298787
Http://www.100y.com.tw

3.3.10 To exhibit the best performance of the motor performance (offline auto tuning) (Pr. 71, Pr. 83, Pr. 84, Pr. 96) Magnetic flux Sensorless Vector

The motor performance can be maximized with offline auto tuning.

- What is offline auto tuning?
  When performing advanced magnetic flux vector control, real sensorless vector control or vector control, the motor can be run with the optimum operating characteristics by automaticaly measuring the motor constants (offline auto tuning) even when each motor constants differs, other manufacturer's motor is used, or the wiring length is long.

Parameter Number	Name	Initial Value	Setting Range	Description
71	Applied motor	0	0 to 8, 13 to 18, 20, 23, 24, 30, 33, 34, 40, 43, 44, 50, 53, 54	By selecting a standard motor or constant torque motor, thermal characteristic and motor constants of each motor are set.
83	Motor rated voltage	200/400V *	0 to 1000V	Set the rated motor voltage(V). * The initial value differs according to the voltage level. (200V/400V)
84	Rated motor frequency	60Hz	10 to 120Hz	Set the rated motor frequency (Hz).
96	Auto tuning setting/ status	0	0	Offline auto tuning is not performed
			1	Offline auto tuning is performed without motor running
			101	Offline auto tuning is performed with motor running

POINT

- This function is made valid only when a value other than "9999" is set in *Pr. 80* and *Pr. 81* and advanced magnetic flux vector control or real sensorless vector control is selected.
- You can copy the offline auto tuning data (motor constants) to another inverter with the PU (FR-DU07/FR-PU04).
- Even when motors (other manufacturer's motor, SF-JRC, etc.) other than Mitsubishi standard motor, high efficiency motor (SF-JR SF-HR 0.4kW or more), Mitsubishi constant-torque motor (SF-JRCA SF-HRCA 200V class four-pole 0.4kW to 55kW) and vector control dedicated motor (SF-V5RU) are used or the wiring length is long, using the offline auto tuning function runs the motor with the optimum operating characteristics.
- Tuning is enabled even when a load is connected to the motor. (As the load is lighter, tuning accuracy is higher. Tuning accuracy does not change even if the inertia is large.)
- For the offline auto tuning, you can select either the motor non-rotation mode (*Pr. 96* = "1") or rotation mode. (*Pr. 96* = "101").
- The rotation mode has higher tuning accuracy than the non-rotation mode.
- Reading/writing/copy of motor constants tuned by offline auto tuning are enabled.
- The offline auto tuning status can be monitored with the PU (FR-DU07/FR-PU04).
- Do not connect a surge voltage suppression filter (FR-ASF-H) to the 55K or less and sine wave filter (MT-BSL/BSC) to the 75K or more between the inverter and motor.

勝 特 力 材 料 886-3-5753170
胜特力电子(上海) 86-21-34970699
胜特力电子(深圳) 86-755-83298787
Http://www.100y.com.tw

(1) Before performing offline auto tuning

Check the following before performing offline auto tuning.

- Make sure advanced magnetic flux vector control *(Pr. 80, Pr. 81)*, real sensorless vector control or vector control *(Pr. 800)* is selected. *(Refer to page 55)*
- A motor should be connected. Note that the motor should be at a stop at a tuning start.
- The motor capacity should be equal to or one rank lower than the inverter capacity. (note that the capacity is 0.4kW or more)
- The maximum frequency is 120Hz.
- Motors such as high-slip motor, high-speed motor and special motor cannot be tuned.
- Even if tuning is performed without motor running (*Pr. 96 Auto tuning setting/status* = "1"), the motor may run slightly. Therefore, fix the motor securely with a mechanical brake, or before tuning, make sure that there will be no problem in safety if the motor runs. (Caution is required especially in vertical lift applications). Note that if the motor runs slightly, tuning performance is unaffected.
- Note the following when selecting offline auto tuning performed with motor running (*Pr. 96 Auto tuning setting/status* = "101").
  Torque is not enough during tuning.
  The motor may be run at nearly its rated speed.
  The brake is open.
  No external force is applied to rotate the motor.
- Offline auto tuning will not be performed properly if it is performed with a surge voltage suppression filter (FR-ASF-H) connected to the 55K or less and sine wave filter (MT-BSL/BSC) connected to the 75K or more between the inverter and motor. Remove it before starting tuning.
- When exercising vector control, use the encoder that is coupled directly to the motor shaft without looseness. Speed ratio should be 1:1.

(2) Setting

1) Set "1" or "101" in *Pr. 96 Auto tuning setting/status* .
   - When the setting is "1" . . . . . Tuning is performed without motor running.
     It takes approximately 25 to 120s * until tuning is completed.
     (Excitation noise is produced during tuning.)
     * Tuning time differs according to the inverter capacity and motor type.
   - When the setting is "101" . . . . . Tuning is performed without motor running.
     It takes approximately 40s until tuning is completed.
     The motor runs at nearly its rated frequency.
2) Set the rated voltage of motor (initial value is 200V/400V) in *Pr. 83 Motor rated voltage* and rated frequency of motor (initial value is 60Hz) in *Pr. 84 Rated motor frequency* .
   (For a Japanese standard motor, etc. which has both 50Hz and 60Hz rated values, use it with initial value (200V/60Hz or 400V/60Hz).)

3) Set *Pr. 71 Applied motor* according to the motor used.

Motor		*Pr. 71* Setting *
Mitsubishi standard motor Mitsubishi high efficiency motor	SF-JR, SF-TH	3
	SF-JR 4P-1.5kW or less	23
	SF-HR	43
	Others	3
Mitsubishi constant-torque motor	SF-JRCA 200V 4P, SF-TH (constant torque)	13
	SF-HRCA 200V 4P	53
	Others (SF-JRC, etc.)	13
Vector control dediated motor	SF-V5RU SF-THY	33
Other manufacturer's standard motor	–	3
Other manufacturer's constant torque motor	–	13

* For other settings of *Pr. 71* , refer to *Instruction Manual (applied)*.

勝 特 力 材 料 886-3-5753170
胜特力电子(上海) 86-21-34970699
胜特力电子(深圳) 86-755-83298787
Http://www.100y.com.tw

(3) Execution of tuning

CAUTION

- Before performing tuning, check the monitor display of the operation panel (FR-DU07) or parameter unit (FR-PU04/FR-PU07) if the inverter is in the state ready for tuning. (Refer to 2) below) When the start command is turned on under V/F control, the motor starts.

1)When performing PU operation, press FWD / REV of the operation panel.

For external operation, turn on the run command (STF signal or STR signal). Tuning starts.

CAUTION

- When selecting offline auto tuning performed with motor running (*Pr. 96 Auto tuning setting/status* = "101"), caution must be taken since the motor runs.
- To force tuning to end, use the MRS or RES signal or press STOP RESET of the operation panel.
  (Turning the start signal (STF signal or STR signal) off also ends tuning.)
- During offline auto tuning, only the following I/O signals are valid:
  · Input signals <valid signal> STOP, OH, MRS, RT, CS, RES, STF, STR
  · Output terminal RUN, OL, IPF, FM, AM, A1B1C1
- Since the RUN signal turns on when tuning is started, caution is required especially when a sequerence which releases a mechanical brake by the RUN signal has been designed.
- When executing offline auto tuning, input the run command after switching on the main circuit power (R/L1, S/L2, T/L3) of the inverter.
- Do not perform ON/OFF switching of the second function selection signal (RT) during execution of offline auto tuning. Auto tuning is not excecuted properly.
- Setting offline auto tuning (*Pr. 96 Auto tuning setting/status* = "1 or 101") will make pre-excitation invalid.

勝 特 力 材 料 886-3-5753170
胜特力电子(上海) 86-21-34970699
胜特力电子(深圳) 86-755-83298787
Http://www.100y.com.tw

2)Monitor is displayed on the operation panel (FR-DU07) and parameter unit (FR-PU04/FR-PU07) during tuning as below.

	Parameter Unit (FR-PU04/FR-PU07) Display		Operation Panel (FR-DU07) Display	
Pr. 96 setting	1	101	1	101
(1) Setting	1 --- STOP PU	101 --- STOP PU	1	101
(2) Tuning in progress	TUNE 2 STF FWD PU	TUNE 102 STF FWD PU	2	102
(3) Normal end	TUNE 3 COMPLETION STF STOP PU	TUNE 103 COMPLETION STF STOP PU	3 Flickering	103 Flickering
(4) Error end (when the inverter protective function is activated)	TUNE 9 ERROR STF STOP PU		9	

·Reference: Offline auto tuning time (when the initial value is set)

Offline Auto Tuning Setting	Time
Non-rotation mode (*Pr. 96* = "1")	Approximately 25 to 120s (Tuning time differs according to the inverter capacity and motor type.)
Rotation mode (*Pr. 96* = "101")	Approximately 40s (Offline auto tuning time varies with the acceleration and deceleration time settings as indicated below. Offline auto tuning time = acceleration time + deceleration time + approx. 30s)

3)When offline auto tuning ends, press STOP RESET of the operation panel during PU operation. For external operation, turn off the start signal (STF signal or STR signal).
This operation resets the offline auto tuning and the PU's monitor display returns to the normal indication.
(Without this operation, next operation cannot be started.)

REMARKS

- Do not change the *Pr. 96* setting after completion of tuning (3 or 103).
  If the *Pr. 96* setting is changed, tuning data is made invalid.
  If the *Pr. 96* setting is changed, tuning must be performed again.

4)If offline auto tuning ended in error (see the table below), motor constants are not set.
Perform an inverter reset and restart tuning.

Error Display	Error Cause	Remedy
8	Forced end	Set "1" or "101" in *Pr. 96* and perform tuning again.
9	Inverter protective function operation	Make setting again.
91	Current limit (stall prevention) function was activated.	Increase acceleration/deceleration time. Set "1" in *Pr. 156* .
92	Converter output voltage reached 75% of rated value.	Check for fluctuation of power supply voltage.
93	Calculation error A motor is not connected.	Check the motor wiring and make setting again.

5)When tuning is ended forcibly by pressing STOP RESET or turning off the start signal (STF or STR) during tuning, offline auto tuning does not end normally. (The motor constants have not been set.)
Perform an inverter reset and restart tuning.

CAUTION

- The motor constants measured once in the offline auto tuning are stored as parameters and their data are held until the offline auto tuning is performed again.
- An instantaneous power failure occurring during tuning will result in a tuning error.
  After power is restored, the inverter goes into the normal operation mode. Therefore, when STF (STR) signal is on, the motor runs in the forward (reverse) rotation.
- Any alarm occurring during tuning is handled as in the ordinary mode. Note that if an error retry has been set, retry is ignored.
- The set frequency monitor displayed during the offline auto tuning is 0Hz.

⚠ CAUTION

⚠ Note that the motor may start running suddenly.

⚠ When the offline auto tuning is used in vertical lift application, e.g. a lifter, it may drop due to insufficient torque.

勝 特 力 材 料 886-3-5753170
胜特力电子(上海) 86-21-34970699
胜特力电子(深圳) 86-755-83298787
Http://www.100y.com.tw

3.3.11 High accuracy operation unaffected by the motor temperature (online auto tuning) (Pr. 95) Magnetic flux Sensorless Vector

When online auto tuning is selected under advanced magnetic flux vector control, real sensorless vector control or vector control, excellent torque accuracy is provided by temperature compensation even if the secondary resistance value of the motor varies with the rise of the motor temperature.

Parameter Number	Name	Initial Value	Setting Range	Description
95	Online auto tuning selection	0	0	Online auto tuning is not performed
			1	Start-time online auto tuning
			2	Magnetic flux observer (normal tuning)

(1) Start-time online auto tuning (setting is "1")

- By quickly tuning the motor constants at a start, high accuracy operation unaffected by the motor temperature and stable operation with high torque down to ultra low speed can be performed.
- Make sure advanced magnetic flux vector control (*Pr.80, Pr.81*) or real sensorless vector control (*Pr.800*) is selected. (*Refer to page 55*.)
- Before performing online auto tuning, perform offline auto tuning without fail.

<Operation method>

1) Check that "3" or "103" (offline auto tuning completion) is set in *Pr. 96 Auto tuning setting/status*.
2) Set "1" (start-time online auto tuning) in *Pr. 95 Online auto tuning selection*.
   Online auto tuning is performed from the next starting.
3) When performing PU operation, press FWD / REV of the operation panel.
   For external operation, turn on the run command (STF signal or STR signal).

CAUTION

- For using start-time online auto tuning in vertical lift applications, examine the utilization of a brake sequence for the brake opening timing at a start. Though the tuning ends in about a maximum of 500ms after a start, torque is not provided fully during that period. Therefore, note that there may be a possibility of drop due to gravity.

(2) Magnetic flux observer (normal tuning) (setting value is "2")

- When exercising vector control using a motor with encoder, it is effective for torque accuracy improvement.
  The current flowing in the motor and the inverter output voltage are used to estimate/observe the magnetic flux in the motor.
  The magnetic flux of the motor is always detected with high accuracy so that an excellent characteristic is provided regardless of the change in the temperature of the secondary resistance.
- Vector control *(Pr.80, Pr.81, Pr.800)* should be selected. *(Refer to page 58.)*

CAUTION

- For the SF-V5RU, SF-JR (with encoder), SF-HR (with encoder), SF-JRCA (with encoder) or SF-HRCA (with encoder), it is not necessary to perform offline auto tuning to select adaptive magnetic flux observer.(Note that it is necessary to perform offline auto tuning (non-rotation mode) for the wiring length resistance to be reflected on the control when the wiring length is long (30m or longer as reference).

REMARKS

- Online auto tuning does not operate if the MRS signal is input, if the preset speed is less than the *Pr. 13 Starting frequency*, or if the starting conditions of the inverter are not satisfied, e.g. inverter error.
- Online auto tuning does not operate during deceleration or at a restart during DC brake operation.
- Invalid for jog operation.
- Automatic restart after instantaneous power failure overrides when automatic restart after instantaneous power failure is selected. (Start-time online auto tuning is not performed at frequency search.)
  Perform online auto tuning at a stop with the X28 signal when using automatic restart after instantaneous power failure together.
  (Refer to *Instruction Manual (applied)* for details.)
- Zero current detection and output current detection are valid during online auto tuning.
- The RUN signal is not output during online auto tuning. The RUN signal turns on at a start.
- If the period from an inverter stop to a restart is within 4s, start-time tuning is performed but the tuning results are not reflected.

勝 特 力 材 料 886-3-5753170
胜特力电子(上海) 86-21-34970699
胜特力电子(深圳) 86-755-83298787
Http://www.100y.com.tw

3.3.12 To perform high accuracy / fast response operation (gain adjustment of real sensorless vector control) (Pr. 818 to Pr. 821, Pr. 880)

Sensorless Vector

The ratio of the load inertia to the motor inertia (load inertia moment ratio) is estimated in real time from the torque command and speed during motor operation by vector control. As optimum gain of speed control and position control are automatically set from the load inertia ratio and response level, time and effort of making gain adjustment are reduced. (Easy gain tuning)
When the load inertia ratio can not be estimated due to load fluctuation or real sensorless vector control is exercised, control gain is automatically set by manually inputting the load inertia ratio.
Make a manual input adjustment when vibration, noise or any other unfavorable phenomenon occurs due to large load inertia or gear backlash, for example, or when you want to exhibit the best performance that matches the machine.

Parameter Number	Name	Initial Value	Setting Range	Description
818	Easy gain tuning response level setting	2	1 to 15	Set the response level. 1: Slow response to 15: Fast response
819	Easy gain tuning selection	0	0	Without easy gain tuning
			1	With load estimation, with gain calculation (only under vector control)
			2	With load *(Pr. 880)* manual input, gain calculation
820	Speed control P gain 1	60%	0 to 1000%	Set the proportional gain for speed control. (Increasing the value improves trackability in response to a speed command change and reduces speed variation with disturbance.)
821	Speed control integral time 1	0.333s	0 to 20s	Set the integral time during speed control. (Decrease the value to shorten the time taken for returning to the original speed if speed variation with disturbance occurs.)
880	Load inertia ratio	7 times	0 to 200 times	Set the load intertia ratio to the motor.

(1) Easy gain tuning execution procedure (*Pr.819* = "1" load inertia ratio automatic estimation)

Easy gain tuning (load inertia ratio automatic estimation) is valid only in the speed control or position control mode under vector control.
It is invalid under torque control, V/F control, advanced magnetic flux vector control and real sensorless vector control.

1) Set the response level using *Pr.818 Easy gain tuning response level setting*.
Refer to the diagram on the right and set the response level.
Increasing the value will improve trackability to the command, but too high value will generate vibration.
The relationship between the setting and response level are shown on the right.

Pr.818 setting	1	2	3	4	5	6	7	8	9	10	11	12	13	14	15
Response level	Slow response ←							Middle response			→				Fast response
Guideline of machine resonance frequency (Hz)	8	10	12	15	18	22	28	34	42	52	64	79	98	122	150

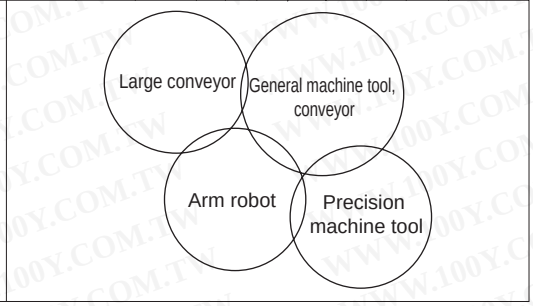

勝 特 力 材 料 886-3-5753170
胜特力电子(上海) 86-21-34970699
胜特力电子(深圳) 86-755-83298787
Http://www.100y.com.tw

2) Each control gain is automatically set from the load inertia ratio estimated during acceleration/deceleration operation and the *Pr. 818 Easy gain tuning response level setting* value.
Pr. 880 Load inertia ratio is used as the initial value of the load inertia ratio for tuning. Estimated value is set in *Pr. 880* during tuning.
The load inertia ratio may not be estimated well, e.g. it takes a long time for estimation, if the following conditions are not satisfied.
· Time taken for acceleration/deceleration to reach 1500r/min is 5s or less.
· Speed is 150r/min or more.
· Acceleration/deceleration torque is 10% or more of the rated torque.
· Abrupt disturbance is not applied during acceleration/deceleration.
· Load inertia ratio is approx. 30 times or less.
· No gear backlash nor belt looseness is found.

勝 特 力 材 料 886-3-5753170
胜特力电子(上海) 86-21-34970699
胜特力电子(深圳) 86-755-83298787
Http://www.100y.com.tw

3) Press FWD or REV to estimate the load inertia ratio or calculate gain any time.(The operation command for external operation is the STF or STR signal.)

(2) Easy gain tuning execution procedure (*Pr.819* = "2" load inertia manual input)

Easy gain tuning (load inertia ratio manual input) is valid only in the speed control under real sensorless vector control or in the speed control or position control mode under vector control.

1) Set the load inertia ratio to the motor in *Pr. 880 Load inertia ratio*.
2) Set "2" (with easy gain tuning) in *Pr. 819 Easy gain tuning selection*. Then, *Pr. 820 Speed control P gain 1* and *Pr. 821 Speed control integral time 1* are automaticaly set by gain calculation.
Operation is performed in a gain adjusted status from the next operation.
3) Perform a test run and set the response level in *Pr. 818 Easy gain tuning response level setting*. Increasing the value will improve trackability to the command, but too high value will generate vibration. (When "2" (parameter write enabled during operation) is set in *Pr. 77 Parameter write selection* , response level adjustment can be made during operation.)

REMARKS

· When "1 or 2" is set in *Pr. 819* and then returned the *Pr. 819* setting to "0" after tuning is executed, tuning results which are set in each parameter remain unchanged.
· When good tuning accuracy is not obtained after executing easy gain tuning due to disturbance and such, perform fine adjustment by manual input. Set "0" (without easy gain tuning) in *Pr. 819*.

(3) Automatically set parameters by easy gain tuning

The following table indicates the relationship between easy gain tuning function and gain adjustment parameter.

	Easy Gain Tuning Selection *(Pr. 819)* Setting		
	0	1	2
Load inertia ratio *(Pr. 880)*	Manual input	a) Inertia estimation result (RAM) by easy gain tuning is dispayed. b) Set the value in the following cases: • Every hour after power-on • When a value other than "1" is set in *Pr.819* • When vector control is changed to other control (V/F control etc.) using *Pr.800* c) Write is enabled only during a stop (manual input)	Manual input
Speed control P gain 1 *(Pr. 820)* Speed control integral time 1 *(Pr. 821)* Model speed control gain *(Pr. 828)* Position loop gain *(Pr. 422)*	Manual input	a) Tuning result (RAM) is displayed. b) Set the value in the following cases: • Every hour after power-on • When a value other than "1" is set in *Pr.819* • When vector control is changed to other control (V/F control etc.) using *Pr.800* c) Write (manual input) disabled	a) Gain is calculated when "2" is set in *Pr.819* and the result is set in the parameter. b) When the value is read, the tuning result (parameter setting value) is displayed. c) Write (manual input) disabled

CAUTION

Performing easy gain tuning with larger inertia than the specified value during vector control may cause malfunction such as hunting. In addition, when the motor shaft is fixed with servo lock or position control, bearing may be damaged. To prevent these, make gain adjustment by manual input without performing easy gain tuning.

(4) Manual input speed control gain adjustment

· Make adjustment when any of such phenomena as unusual machine vibration/noise, low response level and overshoot has occurred.

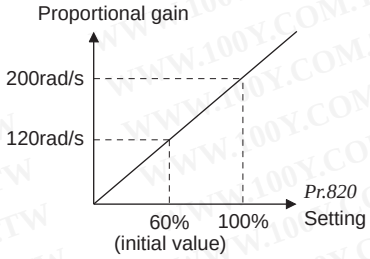

· *Pr. 820 Speed control P gain 1* = "60%" (initial value) is equivalent to 120rad/s (speed responce of the motor alone). Increasing the setting value improves the response level, but a too large gain will produce vibration and/or unusual noise.

· Decreasing the *Pr. 821 Speed control integral time 1* shortens the return time taken at a speed change. However, a too short time will generate an overshoot.

· When there is load inertia, the actual speed gain is as given below.

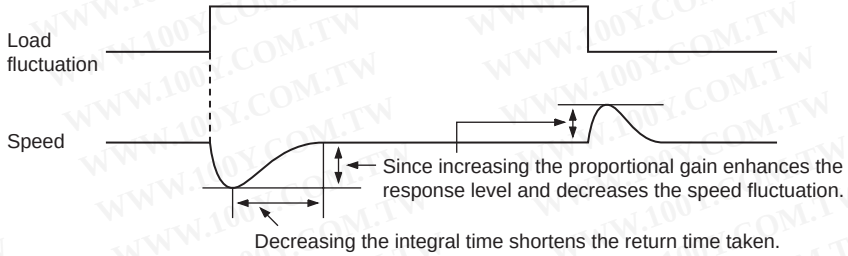

Also, when there is load inertia, the actual speed gain decreases as indicated below.

$$\text{Actual speed gain} = \text{speed gain of motor without load} \times \frac{JM}{JM+JL}$$

JM: Inertia of the motor
JL: Motor shaft-equivalent load inertia

· Adjustment procedures are as below:
1)Check the conditions and simultaneously change the *Pr. 820* value.
2)If you cannot make proper adjustment, change the *Pr. 821* value and repeat step 1).

No.	Phenomenon/ Condition	Adjustment Method	
1	Load inertia is large	Set the *Pr. 820* and *Pr. 821* values a little higher.	
		Pr. 820	When a speed rise is slow, increase the value 10% by 10% until just before vibration/noise is produced, and set about 0.8 to 0.9 of that value.
		Pr. 821	If an overshoot occurs, double the value until an overshoot does not occur, and set about 0.8 to 0.9 of that value.
2	Vibration/noise generated from mechanical system	Set the *Pr. 820* value a little lower and the *Pr. 821* value a little higher.	
		Pr. 820	Decrease the value 10% by 10% until just before vibration/noise is not produced, and set about 0.8 to 0.9 of that value.
		Pr. 821	If an overshoot occurs, double the value until an overshoot does not occur, and set about 0.8 to 0.9 of that value.
3	Slow response	Set the *Pr. 820* value a little higher.	
		Pr. 820	When a speed rise is slow, increase the value 5% by 5% until just before vibration/noise is produced, and set about 0.8 to 0.9 of that value.
4	Long return time (response time)	Set the *Pr. 821* value a little lower.	
		Decrease the *Pr. 821* value by half until just before an overshoot or the unstable phenomenon does not occur, and set about 0.8 to 0.9 of that value.	
5	Overshoot or unstable phenomenon occurs.	Set the *Pr. 821* value a little higher.	
		Double the *Pr. 821* value until just before an overshoot or the unstable phenomenon does not occur, and set about 0.8 to 0.9 of that value.	

REMARKS

· When making manual input gain adjustment, set "0" (without easy gain tuning) (initial value) in *Pr. 819 Easy gain tuning selection*.

勝 特 力 材 料 886-3-5753170
胜特力电子(上海) 86-21-34970699
胜特力电子(深圳) 86-755-83298787
Http://www.100y.com.tw

(5) Troubleshooting

	Phenomenon	Cause	Countermeasures
1	Motor does not rotate. (Vector control)	(1) The motor wiring is wrong	(1) Wiring check Select V/F control (*Pr.800* = 20) and check the rotation direction of the motor. Check the speed monitor output from output terminal FM. For the FR-V5RU, set "170V" for 3.7kW or less and " 160V " for more in *Pr. 19 Base frequency voltage*, and set "50Hz" in *Pr. 3 Base frequency*. 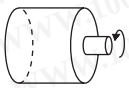 When the forward rotation signal is input, the motor running in the counterclockwise direction as viewed from the motor shaft is normal. (If it runs in the clockwise direction, the phase sequence of the inverter secondary side wiring is incorrect.)
		(2) Encoder specifications (encoder specification selection switch FR-A7AP) are wrong	(2) Check the encoder specifications. Check the encoder specifications selection switch (FR-A7AP) of differential/complimentary
		(3) The encoder wiring is wrong.	(3) Check that FWD is displayed when running the motor in the counter-clockwise direction from outside during a stop of the inverter with vector control setting. If REV is displayed, the encoder phase sequence is wrong. Perform the correct wiring or match the *Pr.359 Encoder rotation direction.* **Pr. 359 setting** / **Relationship between the motor and encoder** 0: Clockwise direction as viewed from A is forward rotation 1 (Initial value): 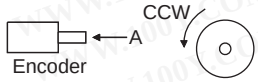 Counter clockwise direction as viewed from A is forward rotation
		(4) The *Pr. 369 Number of encoder pulses* setting and the number of encoder used are different.	(4) The motor will not run if the parameter setting is smaller than the number of encoder pulses used. Set the *Pr. 369 Number of encoder pulses* correctly.
		(5) Encoder power specifications are wrong. Or, power is not input.	(5) Check the power specifications (5V/12V/15V/24V) of encoder and input the external power supply.
2	Motor does not run at correct speed. (Speed command does not match actual speed)	(1) The speed command from the command device is incorrect. The speed command is compounded with noise.	(1) Check that a correct speed command comes from the command device. Decrease *Pr. 72 PWM frequency selection*.
		(2) The speed command value does not match the inverter-recognized value.	(2) Readjust speed command bias/gain *Pr. 125, Pr. 126, C2 to C7* and *C12 to C15*.
		(3) The number of encoder pulses setting is incorrect.	(3) Check the setting of *Pr.369 Number of encoder pulses*. (vector control)
3	Speed does not rise to the speed command.	(1) Insufficient torque. Torque limit is actuated.	(1) -1 Increase the torque limit value. (Refer to torque limit of speed control on *Instruction Manual (applied)*) (1)-2 Insufficient capacity
		(2) Only P (proportional) control is selected.	(2) When the load is heavy, speed deviation will occur under P (proportional) control. Select PI control.

勝 特 力 材 料 886-3-5753170
胜特力电子(上海) 86-21-34970699
胜特力电子(深圳) 86-755-83298787
Http://www.100y.com.tw

	Phenomenon	Cause	Countermeasures
4	Motor speed is unstable.	(1) The speed command varies. (2) Insufficient torque. (3) The speed control gains do not match the machine. (machine resonance)	(1) -1 Check that a correct speed command comes from the command device. (Take measures against noises.) (1) -2 Decrease *Pr. 72 PWM frequency selection*. (1) -3 Increase *Pr. 822 Speed setting filter 1*. *(Refer to Instruction Manual (applied))* (2) Increase the torque limit value. (Refer to torque limit of speed control on *Instruction Manual (applied)*) (3) -1 Perform easy gain tuning. *(Refer to page 68)* (3) -2 Adjust *Pr. 820, Pr. 821*. *(Refer to page 70)* (3) -3 Perform speed feed forward/model adaptive speed control.
5	Motor or machine hunts (vibration/noise is produced).	(1) The speed control gain is high. (2) The torque control gain is high. (3) The motor wiring is wrong.	(1) -1 Perform easy gain tuning. *(Refer to page 68)* (1) -2 Decrease *Pr. 820* and increase *Pr. 821*. (1) -3 Perform speed feed foward control and model adaptive speed control. (2) Decrease the *Pr. 824* value. *(Refer to Instruction Manual (applied))* (3) Check the wiring
6	Acceleration/deceleration time does not match the setting.	(1) Insufficient torque. (2) Large load inertia.	(1) -1 Increase the torque limit value. (Refer to torque limit of speed control on *Instruction Manual (applied)*) (1) -2 Perform speed feed foward control. (2) Set the acceleration/deceleration time that meets the load.
7	Machine operation is unstable	(1) The speed control gains do not match the machine. (2) Slow response because of improper acceleration/ deceleration time of the inverter.	(1) -1 Perform easy gain tuning. *(Refer to page 68)* (1) -2 Adjust *Pr. 820, Pr. 821*. *(Refer to page 70)* (1) -3 Perform speed feed foward control and model adaptive speed control. (2) Change the acceleration/deceleration time to an optimum value.
8	Speed fluctuates at low speed.	(1) Adverse effect of high carrier frequency. (2) Low speed control gain.	(1) Decrease *Pr. 72 PWM frequency selection*. (2) Increase *Pr. 820 Speed control P gain 1*.

勝 特 力 材 料 886-3-5753170
胜特力电子(上海) 86-21-34970699
胜特力电子(深圳) 86-755-83298787
Http://www.100y.com.tw

3.4 Start/stop from the operation panel (PU operation mode)

POINT

From where is the frequency command given?

- **Operation at the frequency set in the frequency setting mode of the operation panel** →*Refer to 3.4.1 (Refer to page 73)*
- **Operation using the setting dial as the volume** →*Refer to 3.4.2 (Refer to page 74)*
- **Change of frequency with ON/OFF switches connected to terminals** →*Refer to 3.4.3 (Refer to page 75)*
- **Frequency setting with a voltage output device** →*Refer to 3.4.4 (Refer to page 76)*
- **Frequency setting with a current output device** →*Refer to 3.4.5 (Refer to page 77)*

[Connection diagram]

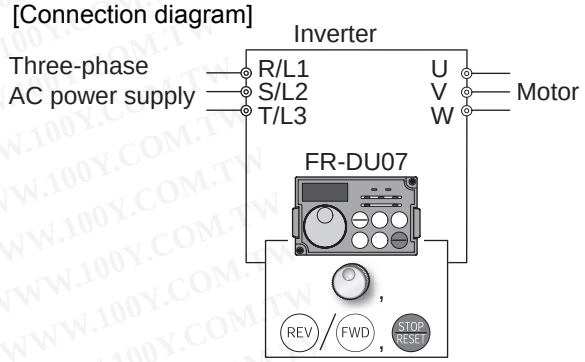

3.4.1 Set the set frequency to operate (example: performing operation at 30Hz)

Operation	Display
1. Screen at powering on The monitor display appears.	0.00 Hz MON EXT
2. Press PU/EXT to choose the PU operation mode.	PU indication is lit. 0.00 PU EXT NET
3. Turn ◎ to show the frequency you want to set. The frequency flickers for about 5s.	30.00 Flickers for about 5s
4. While the value is flickering, press SET to set the frequency.	30.00 F **Flicker ··· Frequency setting complete!!**
(If you do not press SET, the value flickers for about 5s and the display then returns to 0.00 (display) Hz. At this time, return to "Step 3" and set the frequency again.)	
5. After the value flickered for about 3s, the display returns to 0.00 (monitor display). Press FWD (or REV) to start operation.	⇩ 3s later 0.00 → 30.00 Hz MON PU FWD
6. To change the set frequency, perform the operation in above steps 3 and 4. (Starts from the previously set frequency.)	
7. Press STOP RESET to stop.	30.00 → 0.00 Hz MON PU REV FWD

? Operation cannot be performed at the set frequency ... Why?
- ☞ Did you carry out step 4 within 5s after step 3? (Did you press SET within 5s after turning ◎ ?)

? The frequency does not change by turning ◎ ... Why?
- ☞ Check to see if the operation mode selected is the external operation mode. (Press PU/EXT to change to the PU operation mode.)

? Operation does not change to the PU operation mode ... Why?
- ☞ Check that "0" (initial value) is set in *Pr. 79 Operation mode selection*.
- ☞ Check that the start command is not on.

? Change acceleration time ☞*Pr. 7 (Refer to page 53)*

? Change deceleration time ☞*Pr. 8 (Refer to page 53)*

For example, limit the motor speed to 60Hz maximum. ☞Set "60Hz" in *Pr. 1. (Refer to page 52)*

REMARKS

- Press ◎ to show the set frequency.
- ◎ can also be used like a potentiometer to perform operation. *(Refer to page 74)*

勝 特 力 材 料 886-3-5753170
胜特力电子(上海) 86-21-34970699
胜特力电子(深圳) 86-755-83298787
Http://www.100y.com.tw

3.4.2 Use the setting dial like a potentiometer to perform operation.

POINT

Set "1" (setting dial potentiometer mode) in *Pr. 161 Frequency setting/key lock operation selection*.

Operation example | Change the frequency from 0Hz to 60Hz during operation

Operation	Display
1. Screen at powering on The monitor display appears.	
2. Press PU/EXT to choose the PU operation mode.	PU indication is lit.
3. Change *Pr. 161* to the setting value " 1 ". *(Refer to page 43 for change of the setting.)*	
4. Press FWD (or REV) to start the inverter.	
5. Turn until "60.00" appears. The flickering frequency is the set frequency. You need not press SET.	 The frequency flickers for about 5s.

REMARKS

- If flickering "60.00" turns to "0.0", the *Pr. 161 Frequency setting/key lock operation selection* setting may not be "1".
- Independently of whether the inverter is running or at a stop, the frequency can be set by merely turning .

勝 特 力 材 料 886-3-5753170
胜特力电子(上海) 86-21-34970699
胜特力电子(深圳) 86-755-83298787
Http://www.100y.com.tw

勝 特 力 材 料 886-3-5753170
胜特力电子(上海) 86-21-34970699
胜特力电子(深圳) 86-755-83298787
Http://www.100y.com.tw

3.4.3 Use switches to give a start command and a frequency command (multi-speed setting)

POINT

- Use (FWD)/(REV) to give a start command.
- *Pr. 79 Operation mode selection* must be set to "4" (external/PU combined operation mode 2)
- The initial values of the terminals RH, RM, RL are 60Hz, 30Hz, and 10Hz. *(Refer to page 79 to change frequencies using Pr. 4, Pr. 5 and Pr. 6.)*
- Operation at 7-speed can be performed by turning on two (or three) terminals simultaneously. *(Refer to Instruction Manual (applied).)*

[Connection diagram]

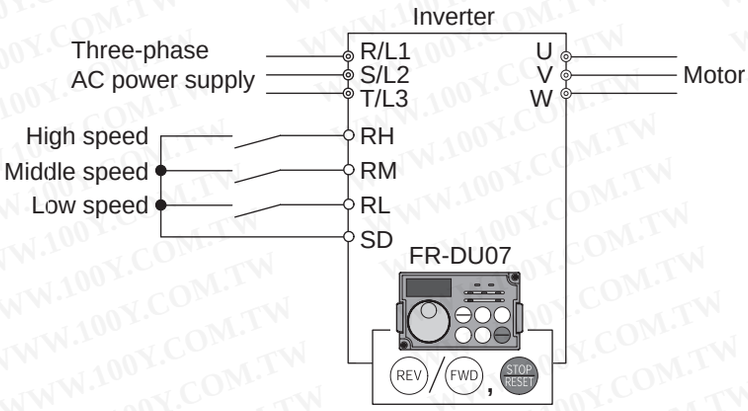

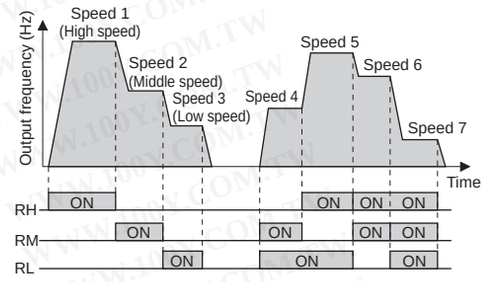

Operation — Display

1. Screen at powering on
   The monitor display appears.

2. Change the *Pr. 79* setting to "4".
   (Refer to page 43 for change of the setting.)

3. Press the start switch (FWD) (or (REV)).
   FWD (or REV) flickers.
   When the frequency command is not given, it flickers.

4. Turn on the low speed switch (RL).
   The output frequency increases to 10Hz according to *Pr. 7 Acceleration time*.

5. Turn off the low speed switch (RL).
   The output frequency decreases to 0Hz according to *Pr. 8 Deceleration time*.

6. Turn off the start switch (STOP RESET).
   FWD (or REV) turns off.

? 60Hz for the RH, 30Hz for the RM and 10Hz for the RL are not output when they are turned on ... Why?
- ☞ Check for the setting of *Pr. 4*, *Pr. 5*, and *Pr. 6* once again.
- ☞ Check for the setting of *Pr. 1 Maximum frequency* and *Pr. 2 Minimum frequency* once again. *(Refer to page 52.)*
- ☞ Check that *Pr. 180 RL terminal function selection* = "0", *Pr. 181 RM terminal function selection* = "1", *Pr. 182 RH terminal function selection* = "2" and *Pr. 59 Remote function selection* = "0". (all are initial values)

? [FWD (or REV)] lamp is not lit ... Why?
- ☞ Check that wiring is correct. Check the wiring once again.
- ☞ Check for the *Pr. 79* setting once again. (*Pr. 79* must be set to "4".) *(Refer to page 54.)*

? Change the frequency of the terminal RL, RM, and RH. ... How?
- ☞ Refer to *page 79* to change the running frequency at each terminal in *Pr. 4 Multi-speed setting (high speed)*, *Pr. 5 Multi-speed setting (middle speed)*, and *Pr. 6 Multi-speed setting (low speed)*.

3.4.4 Perform frequency setting by analog (voltage input)

POINT

- Use (FWD)/(REV) to give a start command.
- *Pr. 79 Operation mode selection* must be set to "4" (external/PU combined operation mode 2)

[Connection diagram]
(The inverter supplies 5V of power to the frequency setting potentiometer.(Terminal 10))

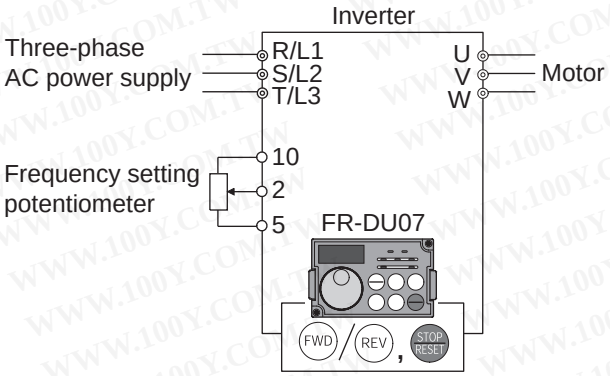

勝 特 力 材 料 886-3-5753170
胜特力电子(上海) 86-21-34970699
胜特力电子(深圳) 86-755-83298787
Http://www.100y.com.tw

Operation	Display
1. Screen at powering on The monitor display appears.	
2. Change the *Pr. 79* setting to " 4". *(Refer to page 43 for change of the setting.)*	
3. Start Press the start switch (FWD) (or (REV)). Operation status indication of FWD (or REV) flickers. **CAUTION** **When both the forward switch and reverse switch turn on, the inverter will not start. Also, if both switch turn on while running, the inverter stops.**	 Flickering
4. Acceleration → constant speed Turn the volume (frequency setting potentiometer) clockwise slowly to full. The frequency value on the indication increases according to *Pr. 7 Acceleration time* until 60Hz is displayed.	
5. Deceleration Turn the volume (frequency setting potentiometer) counterclockwise slowly to full. The frequency value on the indication decreases according to *Pr. 8 Deceleration time* unitl 0.00Hz is displayed and operation status indication of FWD or REV flickers. The motor stops.	 Flickering Stop
6. Stop Press (STOP RESET). Operation status indication of FWD (or REV) turns off.	

? Change the frequency (60Hz) of the maximum value of potentiometer (at 5V, initial value)
☞ Adjust the frequency in *Pr. 125 Terminal 2 frequency setting gain frequency. (Refer to page 82.)*

? Change the frequency (0Hz) of the minimum value of potentiometer (at 0V, initial value)
☞ Adjust the frequency in *calibration parameter C2 Terminal 2 frequency setting bias frequency. (Refer to Instruction Manual (applied).)*

3.4.5 Perform frequency setting by analog (current input)

POINT

- Use (FWD)/(REV) to give a start command.
- Turn the AU signal on.
- *Pr. 79 Operation mode selection* must be set to "4" (external/PU combined operation mode 2)

[Connection diagram]

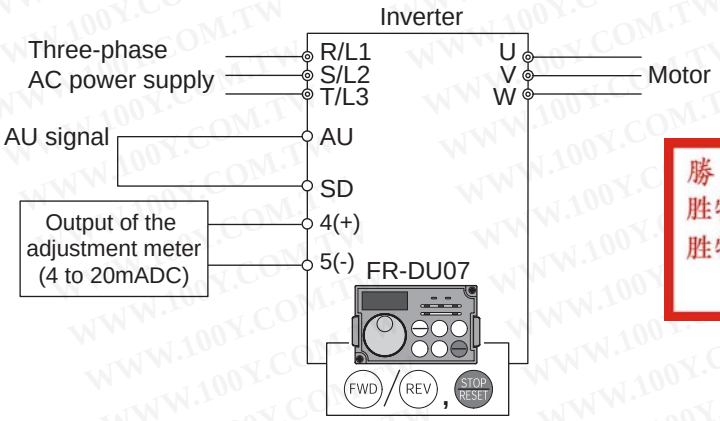

勝 特 力 材 料 886-3-5753170
胜特力电子(上海) 86-21-34970699
胜特力电子(深圳) 86-755-83298787
Http://www.100y.com.tw

Operation

1. Screen at powering on
   The monitor display appears.

2. Change the *Pr. 79* setting to "4".
   (Refer to page 43 for change of the setting.)

3. Start
   Check that the terminal 4 input selection signal (AU) is on.
   Press the start switch (FWD) (or (REV)).
   FWD or REV of operation status indication flickers.

CAUTION

When both the forward switch and reverse switch turn on, the inverter will not start.
Also, if both switch turn on while running, the inverter stops.

4. Acceleration → constant speed
   Perform 20mA input.
   The frequency value on the indication increases according to *Pr. 7 Acceleration time* until 60.00Hz is displayed.

5. Deceleration
   Perform 4mA input.
   The frequency value on the indication decreases according to *Pr. 8 Deceleration time* until 0.00Hz is displayed and the operation status indication of FWD or REV flickers.
   The motor stops.

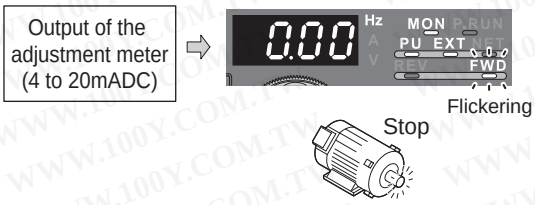

6. Stop
   Press (STOP RESET).
   FWD or REV of the operation status indication turns off.

REMARKS

Pr. 184 AU terminal function selection must be set to "4" (AU signal) (initial value). *(Refer to Instruction Manual (applied).)*

? Change the frequency (60Hz) at the maximum value of potentiometer (at 20mA, initial value)
☞ Adjust the frequency in *Pr. 126 Terminal 4 frequency setting gain frequency. (Refer to page 84.)*

? Change the frequency (0Hz) at the minimum value of potentiometer (at 4mA, initial value)
☞ Adjust the frequency in *calibration parameter C5 Terminal 4 frequency setting bias frequency. (Refer to Instruction Manual (applied).)*

3.5 Make a start and stop with terminals (external operation)

POINT

From where is the frequency command given?

- **Operation at the frequency set in the frequency setting mode of the operation panel** → *Refer to 3.5.1(Refer to page 78)*
- **Give a frequency command by switch (multi-speed setting)** → *Refer to 3.5.2 (Refer to page 79)*
- **Perform frequency setting by a voltage output device** → *Refer to 3.5.3 (Refer to page 81)*
- **Perform frequency setting by a current output device** → *Refer to 3.5.5 (Refer to page 83)*

3.5.1 Use the set frequency set by the operation panel (Pr. 79 = 3)

POINT

- Switch terminal STF(STR)-SD on to give a start command.
- Set "3" in *Pr. 79* (External/PU combined operation mode 1).
- Refer to *page 73* for the set frequency by the operation panel.

[Connection diagram]

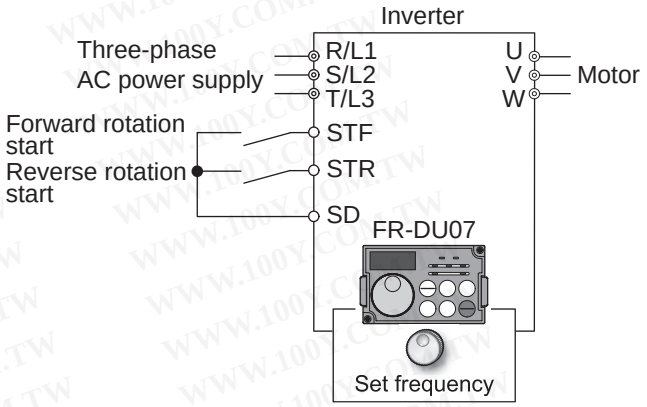

勝 特 力 材 料 886-3-5753170
胜特力电子(上海) 86-21-34970699
胜特力电子(深圳) 86-755-83298787
Http://www.100y.com.tw

Operation

1. Screen at powering on
   The monitor display appears.
2. Change the *Pr. 79* setting to " 3".
   (Refer to page 43 for change of the setting.)
3. Turn the start switch (STF or STR) on.
   •The motor runs at the frequency set in the set frequency mode of the operation panel.
4. Turn to change running frequency.
   Display the frequency you want to set.
   The frequency flickers for about 5s.
5. While the value is flickering, press SET to set the frequency.
   (If you do not press SET, the value flickers for about 5s and the display then returns to 0.00 (display) Hz. At this time, return to "Step 3" and set the frequency again.)
6. Turn the start switch (STF or STR) off.
   The motor decelerates according to *Pr. 8 Deceleration time* to stop.

Display

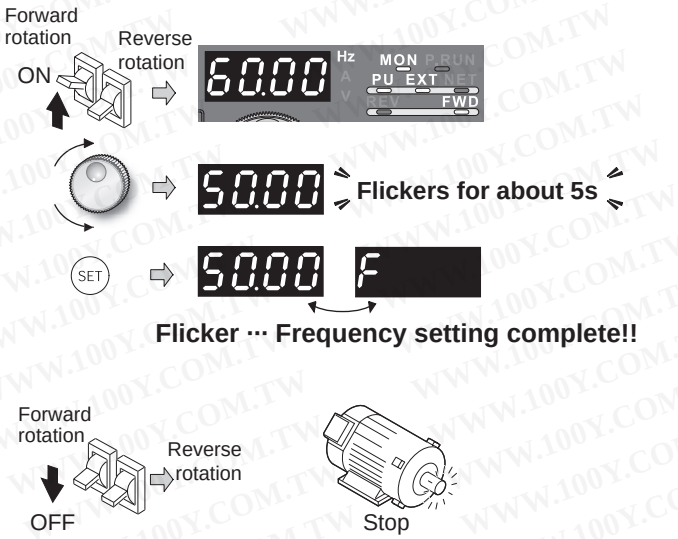

REMARKS

- *Pr. 178 STF terminal function selection* must be set to "60" (or *Pr. 179 STR terminal function selection* must be set to "61"). (all are initial values)
- When *Pr. 79 Operation mode selection* is set to "3", multi-speed operation (refer to *page 79*) is also made valid.

? When the inverter is stopped by STOP/RESET of the operation panel (FR-DU07), PS and 0.00 are displayed alternately.

☞ 1. Turn the start switch (STF or STR) off.

2. The display can be reset by PU/EXT.

Flickering

3.5.2 Use switches to give a start command and a frequency command (multi-speed setting) (Pr. 4 to Pr. 6)

POINT

- Start command by terminal STF (STR)-SD
- Frequency command by terminal RH, RM, RL and STR-SD
- [EXT] must be lit. (When [PU] is lit, switch it to [EXT] with PU/EXT.)
- The initial values of the terminals RH, RM, RL are 60Hz, 30Hz, and 10Hz. (Use *Pr. 4*, *Pr. 5 and Pr. 6* to change.)
- Operation at 7-speed can be performed by turning two (or three) terminals simultaneously. *(Refer to Instruction Manual (applied).)*

[Connection diagram]

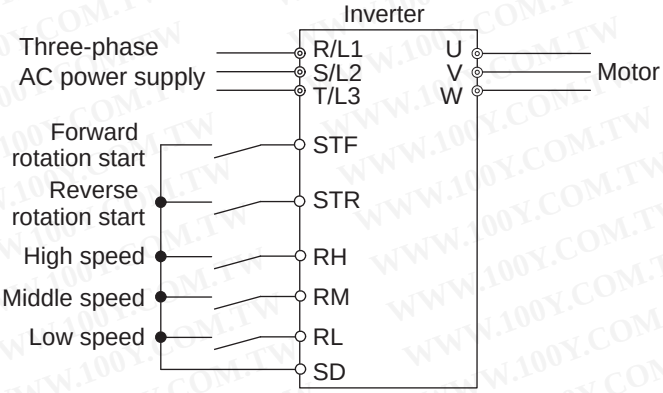

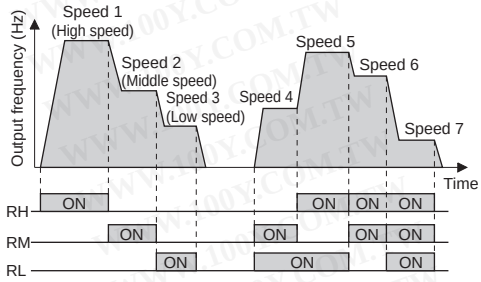

Changing example Set "50Hz" in *Pr. 4 Multi-speed setting (high speed)* and turn on terminal RH and STF (STR)-SD to operate.

Operation	Display

1. Power on → operation mode check
   For the initial setting, the inverter operates in the external operation mode [EXT] when powering on. Check that the operation command indication is [EXT].
   If not displayed, press PU/EXT to change to the external [EXT] operation mode. If the operation mode still does not change, set *Pr. 79* to change to the external operation mode.

勝 特 力 材 料 886-3-5753170
胜特力电子(上海) 86-21-34970699
胜特力电子(深圳) 86-755-83298787
Http://www.100y.com.tw

2. Change the *Pr. 4* setting to "50".
   (Refer to page 43 for change of the setting.)

3. Turn on the high speed switch (RH).

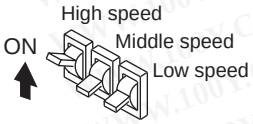

4. Turn the start switch (STF or STR) on.
   50Hz appears.
   - 30Hz appears when RM is on and 10Hz appears when RL is on.

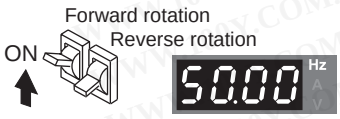

5. Stop
   Turn the start switch (STF or STR) off.
   The motor stops according to *Pr. 8 Deceleration time*.

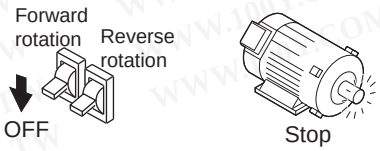

? [EXT] is not lit even when (PU/EXT) is pressed ... Why?

☞ Switchover of the operation mode with (PU/EXT) is valid when *Pr. 79* = "0" (initial value).

? 50Hz, 30Hz and 10Hz are not output from RH, RM and RL respectively when they are turned on. ... Why?

☞ Check for the setting of *Pr. 4*, *Pr. 5*, *and Pr. 6* once again.

☞ Check for the setting of *Pr. 1 Maximum frequency* and *Pr. 2 Minimum frequency* once again. *(Refer to page 52)*

☞ Check for the *Pr. 79* setting once again. (*Pr. 79* must be set to "0" or "2".) *(Refer to page 54)*

☞ Check that *Pr. 180 RL terminal function selection* = "0", *Pr. 181 RM terminal function selection* = "1", *Pr. 182 RH terminal function selection* = "2" and *Pr. 59 Remote function selection* = "0". (all are initial values)

? [FWD (or REV)] is not lit. ... Why?

☞ Check that wiring is correct. Check it again.

☞ Check that "60" is set in *Pr. 178 STF terminal function selection* (or "61" is set in *Pr. 179 STR terminal function selection)*?
(all are initial values)

? How is the frequency setting from 4 to 7 speed ?

☞ The setting differs according to *Pr. 24 to Pr. 27* (multi-speed setting). *Refer to* 📖 *Instruction Manual (applied)*.

? Perform multi-speed operation higher than 8 speed. ... How?

☞ Use the REX signal to perform the operation. *Refer to* 📖 *Instruction Manual (applied)*.

REMARKS

- External operation is fixed by setting "2" (external operation mode) in *Pr. 79 Operation mode selection* when you do not want to take time pressing (PU/EXT) or when you want to use the current start command and frequency command. *(Refer to page 54)*

勝 特 力 材 料 886-3-5753170
胜特力电子(上海) 86-21-34970699
胜特力电子(深圳) 86-755-83298787
Http://www.100y.com.tw

3.5.3 Perform frequency setting by analog (voltage input)

[Connection diagram]
(The inverter supplies 5V of power to frequency setting potentiometer. (Terminal 10))

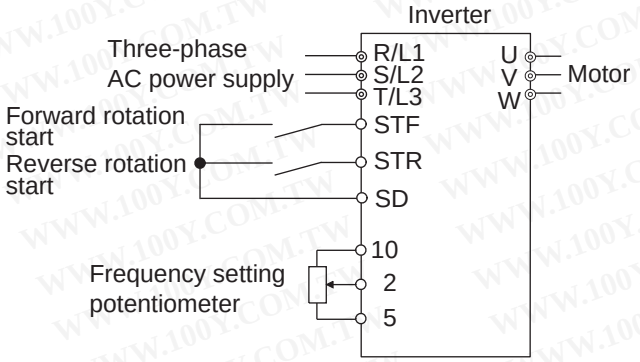

勝 特 力 材 料 886-3-5753170
胜特力电子(上海) 86-21-34970699
胜特力电子(深圳) 86-755-83298787
Http://www.100y.com.tw

Operation — **Display**

1. Power on → operation mode check
For the initial setting, the inverter operates in the external operation mode [EXT] when powering on. Check that the operation command indication is [EXT]. If not displayed, press (PU/EXT) to change to the external [EXT] operation mode. If the operation mode still does not change, set *Pr. 79* to change to the external operation mode. *(Refer to page 54.)*

2. Start
Turn the start switch (STF or STR) on.
Operation status indication of FWD (or REV) flickers.

CAUTION
When both the forward switch and reverse switch are on, the inverter will not start. Also, if both switches turn on while running, the inverter decelerates to stop.

3. Acceleration → constant speed
Turn the volume (frequency setting potentiometer) clockwise slowly to full.
The frequency value on the indication increases according to *Pr. 7 Acceleration time* until 60Hz is displayed.

4. Deceleration
Turn the volume (frequency setting potentiometer) counterclockwise slowly to full.
The frequency value of the indication decreases according to *Pr. 8 Deceleration time* until 0.00Hz is displayed.
The motor stops.

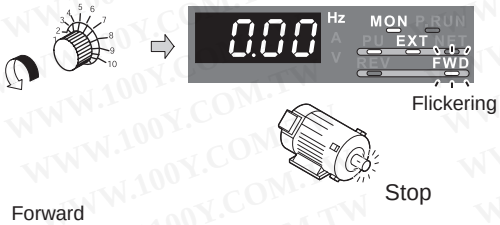

5. Stop
Turn the start switch (STF or STR) off.

When you want to operate in the external operation mode always at powering on or when you want to save the trouble of (PU/EXT) input, set "2" (external operation mode) in Pr. 79 Operation mode selection to choose external operation mode always.

REMARKS

Pr. 178 STF terminal function selection must be set to "60" (or *Pr. 179 STR terminal function selection* must be set to "61").
(all are initial values)

勝 特 力 材 料 886-3-5753170
胜特力电子(上海) 86-21-34970699
胜特力电子(深圳) 86-755-83298787
Http://www.100y.com.tw

? The motor will not rotate ... Why?

☞ Check that [EXT] is lit.
[EXT] is valid when *Pr. 79* = "0" (initial value) or "2".
Use (PU/EXT) to lit [EXT].

☞ Check that wiring is correct. Check once again.

? Change the frequency (0Hz) of the minimum value of potentiometer (at 0V, initial value)

☞ Adjust the frequency in *calibration parameter C2 Terminal 2 frequency setting bias frequency*. *(Refer to Instruction Manual (applied).)*

When you want to compensate frequency setting, use terminal 1.
For details, refer to *Instruction Manual (applied)*.

3.5.4 Change the frequency (60Hz) of the maximum value of potentiometer (at 5V, initial value)

<How to change the maximum frequency?>

Changing example	When you want to use the 0 to 5VDC input frequency setting potentiometer to change the 5V-time frequency from 60Hz (initial value) to 50Hz Adjust to output 50Hz at 5V voltage input. Set "50Hz" in *Pr. 125*.

Operation — **Display**

1. Turn ⊙ until P.125 (*Pr. 125*) appears.
2. Press (SET) to show the currently set value. (60.00Hz)
3. Turn ⊙ to change the set value to "50.00". (50.00Hz)
4. Press (SET) to set.
5. Mode/monitor check
   Press (MODE) twice to choose the monitor/frequency monitor.
6. Turn the start switch (STF or STR) on and turn the volume (frequency setting potentiometer) clockwise to full slowly.
   (Refer to 3.5.3 steps 2 to 5)

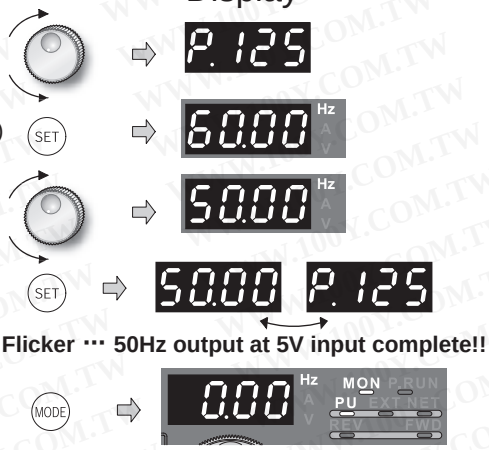

? The frequency meter (indicator) connected to across terminals FM-SD does not indicate just 50Hz ... Why?

☞ The meter can be adjusted by *calibration parameter C0 FM terminal calibration*. *(Refer to Instruction Manual (applied).)*

? Set frequency at 0V using *calibration parameter C2* and adjust the indicator using *calibration parameter C0*.
(Refer to Instruction Manual (applied).)

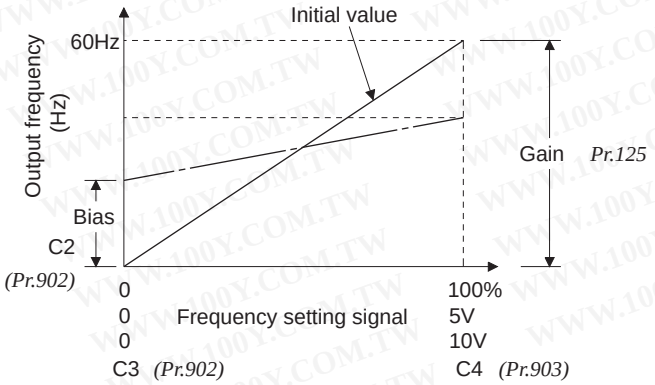

REMARKS

As other adjustment methods of frequency setting voltage gain, there are methods to adjust with a voltage applied to across terminals 2-5 and adjust at any point without a voltage applied.
(Refer to *Instruction Manual (applied)* for the setting method of *calibration parameter C4*.)

3.5.5 Perform frequency setting by analog (current input)

POINT

- Switch terminal STF(STR)-SD on to give a start command.
- Turn the AU signal on.
- Set "2" (external operation mode) in *Pr. 79 Operation mode selection*

[Connection diagram]

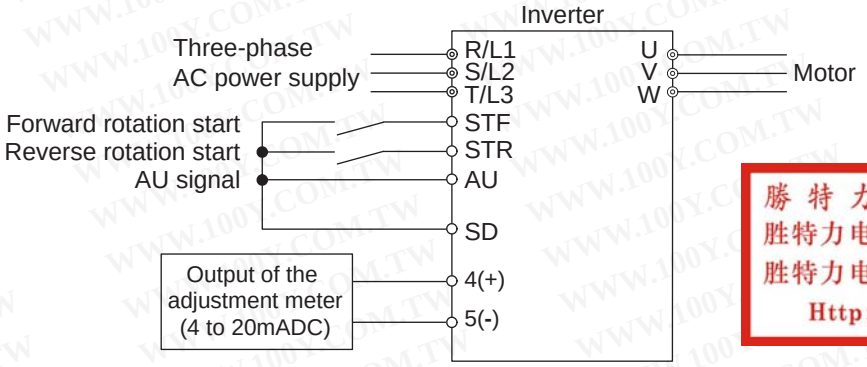

勝 特 力 材 料 886-3-5753170
胜特力电子(上海) 86-21-34970699
胜特力电子(深圳) 86-755-83298787
Http://www.100y.com.tw

Operation — Display

1. Power on → operation mode check
   For the initial setting, the inverter operates in the external operation mode [EXT] when powering on. Check that the operation command indication is [EXT]. If not displayed, press (PU/EXT) to change to the external [EXT] operation mode. If the operation mode still does not change, set *Pr. 79* to change to the external operation mode. *(Refer to page 54.)*

2. Start
   Turn the start switch (STF or STR) on.
   FWD or REV of operation indication flickers.

CAUTION
When both the forward switch and reverse switch are on, the inverter will not start. Also, if both switches turn on while running, the inverter decelerates to stop.

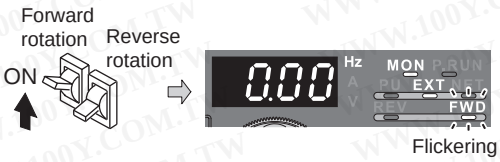

3. Acceleration → constant speed
   Perform 20mA input.
   The frequency value on the indication increases according to *Pr. 7 Acceleration time* until 60.00Hz is displayed.

4. Deceleration
   Perform 4mA input.
   The frequency value on the indication decreases according to *Pr. 8 Deceleration time* until 0.00Hz is displayed and FWD or REV of the operation status indication flickers.
   The motor stops.

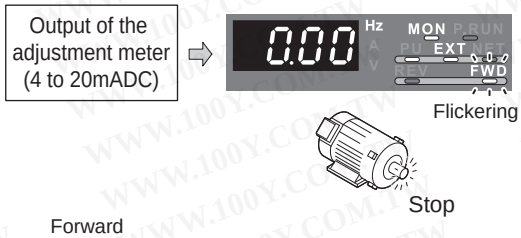

5. Stop
   Turn the start switch (STF or STR) off.

REMARKS

Pr. 184 AU terminal function selection must be set to "4" (AU signal) (initial value). *(Refer to Instruction Manual (applied).)*

勝 特 力 材 料 886-3-5753170
胜特力电子(上海) 86-21-34970699
胜特力电子(深圳) 86-755-83298787
Http://www.100y.com.tw

? The motor will not rotate ... Why?

☞ Check that [EXT] is lit.
[EXT] is valid when *Pr. 79* = "0" (initial value) or "2".

Use (PU/EXT) to lit [EXT].

☞ Check that the AU signal is on.
Turn the AU signal on.

☞ Check that wiring is orrect. Check it again.

? Change the frequency (0Hz) of the minimum value of potentiometer (at 4mA, initial value)

☞ Adjust the frequency in *calibration parameter C5 Terminal 4 frequency setting bias frequency*.
(Refer to Instruction Manual (applied).)

3.5.6 Change the frequency (60Hz) of the maximum value of potentiometer (at 20mA, initial value)

<How to change the maximum frequency?>

Changing example	When you want to use the 4 to 20mA input frequency setting potentiometer to change the 20mA-time frequency from 60Hz (initial value) to 50Hz Adjust to output 50Hz at 20mA current input. Set "50Hz" in *Pr. 126*.

Operation	Display
1. Turn (dial) until P. 126 (*Pr. 126*) appears.	P. 126
2. Press (SET) to show the currently set value. (60.00Hz)	60.00 Hz
3. Turn (dial) to change the set value to "50.00". (50.00Hz)	50.00 Hz
4. Press (SET) to set the value.	50.00 P. 126 (Flicker ··· 50Hz output at 20mA input complete!!)
5. Mode/monitor check Press (MODE) twice to choose the monitor/frequency monitor.	0.00 Hz MON PU
6. Turn the start switch (STF or STR) on to allow 20mA current to flow. (Refer to 3.5.5 steps 2 to 5)	

? The frequency meter (indicator) connected to across terminals FM-SD does not indicate just 50Hz ... Why?

☞ The meter can be adjusted by *calibration parameter C0 FM terminal calibration*.
(Refer to Instruction Manual (applied).)

? Set frequency at 4mA using *calibration parameter C5* and adjust the indicator using *calibration parameter C0*.
(Refer to Instruction Manual (applied).)

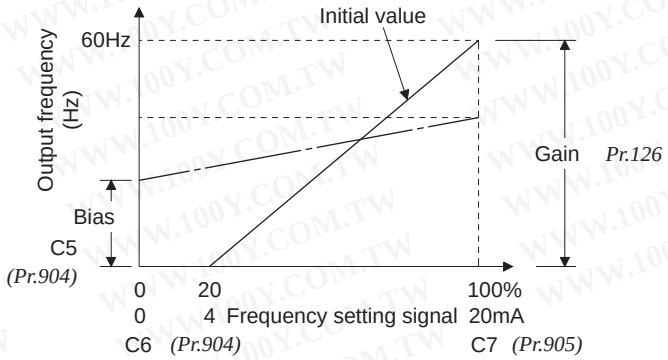

REMARKS

As other adjustment methods of frequency setting voltage gain, there are methods to adjust with a voltage applied to across terminals 4-5 and adjust at any point without a voltage applied.
(Refer to *Instruction Manual (applied)* for the setting method of *calibration parameter C7*.)

3.6 Parameter List

3.6.1 List of parameters classified by purpose of use

Set the parameters according to the operating conditions. The following list indicates purpose of use and corresponding parameters.

Purpose of Use		Parameter Number
Control mode	Change the control method	Pr. 80, Pr. 81, Pr. 451, Pr. 800
Speed control by real sensorless vector control and vector control	Torque limit level setting for speed control	Pr. 22, Pr. 803, Pr. 810 to Pr. 817, Pr. 858, Pr. 868, Pr. 874
	To perform high accuracy/fast response operation (gain adjustment of real sensorless vector control and vector control)	Pr. 818 to Pr. 821, Pr. 830, Pr. 831, Pr. 880
	Speed feed forward control, model adaptive speed control	Pr. 828, Pr. 877 to Pr. 881
	Torque bias function	Pr. 840 to Pr. 848
	Prevent the motor from overrunning	Pr. 285, Pr. 853, Pr. 873
	Notch filter	Pr. 862, Pr. 863
Torque control by real sensorless vector control and vector control	Torque command	Pr. 803 to Pr. 806
	Speed limit	Pr. 807 to Pr.809
	Gain adjustment for torque control	Pr. 824, Pr. 825, Pr. 834, Pr. 835
Position control by vector control	Conditional position feed function by contact input	Pr. 419, Pr. 464 to Pr. 494
	Position control by pulse train input of the inverter	Pr. 419, Pr. 428 to Pr. 430
	Setting the electronic gear	Pr. 420, Pr. 421, Pr. 424
	Setting of positioning adjustment parameter	Pr. 426, Pr. 427
	Gain adjustment of position control	Pr. 422, Pr. 423, Pr. 425
Adjust the output torque of the motor (current)	Manual torque boost	Pr. 0, Pr. 46, Pr. 112
	Advanced magnetic flux vector control	Pr. 80, Pr. 81, Pr. 89, Pr. 453, Pr. 454, Pr. 569
	Real sensorless vector control	Pr. 80, Pr. 81, Pr. 451, Pr. 800
	Slip compensation	Pr. 245 to Pr. 247
	Stall prevention operation	Pr. 22, Pr. 23, Pr. 48, Pr. 49, Pr. 66, Pr. 114, Pr. 115, Pr. 148, Pr. 149, Pr. 154, Pr. 156, Pr. 157, Pr. 858, Pr. 868
	Torque limit	Pr. 22, Pr. 803, Pr. 810, Pr. 812 to Pr. 817, Pr. 858, Pr. 868, Pr. 874
Limit the output frequency	Maximum/minimum frequency	Pr. 1, Pr. 2, Pr. 18
	Avoid mechanical resonance points (frequency jump)	Pr. 31 to Pr. 36
	Speed limit	Pr. 807 to Pr. 809
Set V/F pattern	Base frequency, voltage	Pr. 3, Pr. 19, Pr. 47, Pr. 113
	V/F pattern matching applications	Pr. 14
	Adjustable 5 points V/F	Pr. 71, Pr. 100 to Pr. 109
Frequency setting with terminals (contact input)	Multi-speed setting operation	Pr. 4 to Pr. 6, Pr. 24 to Pr. 27, Pr. 232 to Pr. 239
	Jog operation	Pr. 15, Pr. 16
	Input compensation of multi-speed and remote setting	Pr. 28
	Remote setting function	Pr. 59

勝 特 力 材 料 886-3-5753170
胜特力电子(上海) 86-21-34970699
胜特力电子(深圳) 86-755-83298787
Http://www.100y.com.tw

勝 特 力 材 料 886-3-5753170
胜特力电子(上海) 86-21-34970699
胜特力电子(深圳) 86-755-83298787
Http://www.100y.com.tw

Purpose of Use		Parameter Number
Acceleration/deceleration time/pattern adjustment	Acceleration/deceleration time setting	Pr. 7, Pr. 8, Pr. 20, Pr. 21, Pr. 44, Pr. 45, Pr. 110, Pr. 111
	Starting frequency	Pr. 13, Pr. 571
	Acceleration/deceleration pattern and backlash measures	Pr. 29, Pr. 140 to Pr. 143, Pr.380 to Pr. 383, Pr. 516 to Pr. 519
	Set a shortest and optimum acceleration/deceleration time automatically. (Automatic acceleration/deceleration)	Pr. 61 to Pr. 64, Pr. 292, Pr. 293
	Regeneration avoidance functions at deceleration	Pr. 882 to Pr. 886, Pr. 665
Selection and protection of a motor	Motor protection from overheat (electronic thermal relay function)	Pr. 9, Pr. 51
	Use the constant torque motor (applied motor)	Pr. 71, Pr. 450
	Offline auto tuning	Pr. 82 to Pr. 84, Pr. 90 to Pr. 94, Pr. 96, Pr. 455 to Pr. 463, Pr. 684, Pr. 859, Pr. 860
	Online auto tuning	Pr. 95, Pr. 574
	Easy gain tuning	Pr. 818, Pr. 819
Motor brake and stop operation	DC injection brake	Pr. 10 to Pr. 12, Pr. 850
	Selection of regeneration unit and DC current feeding	Pr. 30, Pr. 70
	Selection of motor stopping method	Pr. 250
	Decelerate the motor to a stop at instantaneous power failure	Pr. 261 to Pr. 266, Pr. 294
	Stop-on-contact control	Pr. 6, Pr. 270, Pr. 275, Pr. 276
	Brake sequence function	Pr. 278 to Pr. 285, Pr. 292
Function assignment of external terminal and control	Function assignment of input terminal	Pr. 178 to Pr. 189
	Start signal selection	Pr. 250
	Logic selection of output stop signal (MRS)	Pr. 17
	Selection of action conditions of the second (third) function signal (RT(X9))	Pr. 155
	Terminal assignment of output terminal	Pr. 190 to Pr. 196
	Detection of output frequency (SU, FU, FU2, FU3, FB, FB2, FB3, LS signal)	Pr. 41 to Pr. 43, Pr. 50, Pr. 116, Pr. 865
	Detection of output current (Y12 signal) Detection of zero current (Y13 signal)	Pr. 150 to Pr. 153, Pr. 166, Pr. 167
	Remote output function (REM signal)	Pr. 495 to Pr. 497
Monitor display and monitor output signal	Speed display and speed setting	Pr. 37, Pr. 144
	Change of DU/PU monitor descriptions Cumulative monitor clear	Pr. 52, Pr. 170, Pr. 171, Pr. 563, Pr. 564, Pr. 891
	Change of the monitor output from terminal FM and AM	Pr. 54 to Pr. 56, Pr. 158, Pr. 866, Pr. 867
	Adjustment of terminal FM and AM (calibration)	C0 (Pr. 900), C1 (Pr. 901)
	Energy saving monitor	Pr. 891 to Pr. 899
Detection of output frequency, current and torque	Detection of output frequency (SU, FU, FU2, FU3, FB, FB2, FB3, LS signal)	Pr. 41 to Pr. 43, Pr. 50, Pr. 116, Pr. 865
	Detection of output current (Y12 signal) Detection of zero current (Y13 signal)	Pr. 150 to Pr. 153, Pr. 166, Pr. 167
	Torque detection (TU signal)	Pr. 864
Operation selection at power failure and instantaneous power failure	Restart operation after instantaneous power failure/Flying start	Pr. 57, Pr. 58, Pr. 162 to Pr. 165, Pr. 299, Pr. 611
	Decelerate the motor to a stop at instantaneous power failure	Pr. 261 to Pr. 266, Pr. 294
Operation setting at alarm occurrence	Retry function at alarm occurrence	Pr. 65, Pr. 67 to Pr. 69
	Output function of alarm code	Pr. 76
	Input/output phase failure protection selection	Pr. 251, Pr. 872
	Fault definition	Pr. 875
	Regeneration avoidance function	Pr. 882 to Pr. 886, Pr. 665

Purpose of Use		Parameter Number
Energy saving operation	Energy saving control selection	Pr. 60
	How much energy can be saved (energy saving monitor)	Pr. 891 to Pr. 899
Reduction of the motor noise Measures against noise and leakage currents	Carrier frequency and SoftPWM selection	Pr. 72, Pr. 240
	Noise elimination at the analog input	Pr. 74, Pr. 822, Pr. 826, Pr. 832, Pr. 836, Pr. 849
Frequency setting by analog input	Analog input selection	Pr. 73, Pr. 267
	Override function	Pr. 73, Pr. 252, Pr. 253
	Noise elimination at the analog input	Pr. 74, Pr. 822, Pr. 826, Pr. 832, Pr. 836, Pr. 849
	Change of analog input frequency, adjustment of voltage, current input and frequency (calibration)	Pr. 125, Pr. 126, Pr. 241, C2 to C7 (Pr. 902 to Pr. 905)
	Compensation at the analog input	Pr. 242, Pr. 243
Misoperation prevention and parameter setting restriction	Reset selection, disconnected PU detection	Pr. 75
	Prevention of parameter rewrite	Pr. 77
	Prevention of reverse rotation of the motor	Pr. 78
	Display necessary parameters only. (user group)	Pr. 160, Pr. 172 to Pr. 174
	Control of parameter write by communication	Pr. 342
Selection of operation mode and operation location	Operation mode selection	Pr. 79
	Operation mode when power is on	Pr. 79, Pr. 340
	Operation command source and speed command source during communication operation	Pr. 338, Pr. 339
	Selection of the NET mode operation control source	Pr. 550
	Selection of the PU mode operation control source	Pr. 551
Communication operation and setting	RS-485 communication initial setting	Pr. 117 to Pr. 124, Pr. 331 to Pr. 337, Pr. 341
	Control of parameter write by communication	Pr. 342
	ModbusRTU communication specifications	Pr. 343
	Operation command source and speed command source during communication operation	Pr. 338, Pr. 339
	Use setup software (USB communication)	Pr. 547, Pr. 548
	Selection of the NET mode operation control source	Pr. 550
	ModbusRTU protocol (communication protocol selection)	Pr. 549
Special operation and frequency control	PID control	Pr. 127 to Pr. 134, Pr. 575 to Pr. 577
	Switch between the inverter operation and commercial power-supply operation to use	Pr. 135 to Pr. 139, Pr. 159
	Operate at a high speed when a load is light. (load torque high speed frequency control)	Pr. 4, Pr. 5, Pr. 270 to Pr. 274
	Droop control	Pr. 286 to Pr. 288
	Frequency control by pulse train input	Pr. 291, Pr. 384 to Pr. 386
Useful functions	Free parameter	Pr. 888, Pr. 889
	Increase cooling fan life	Pr. 244
	To determine the maintenance time of parts.	Pr. 255 to Pr. 259, Pr. 503, Pr. 504
	How much energy can be saved (energy saving monitor)	Pr. 60, Pr. 891 to Pr. 899
Setting from the parameter unit and operation panel	Parameter unit language switchover	Pr. 145
	Operation selection of the operation panel	Pr. 161
	Buzzer control of the operation panel	Pr. 990
	Contrast adjustment of the parameter unit	Pr. 991

勝 特 力 材 料 886-3-5753170
胜特力电子(上海) 86-21-34970699
胜特力电子(深圳) 86-755-83298787
Http://www.100y.com.tw

3.6.2 Parameter list

勝 特 力 材 料 886-3-5753170
胜特力电子(上海) 86-21-34970699
胜特力电子(深圳) 86-755-83298787
Http://www.100y.com.tw

- ◎ indicates simple mode parameters.
- The abbreviations in the explanations below indicate:

  V/F ...V/F control

  Magnetic flux ...advanced magnetic flux vector control

  Sensorless ...real sensorless vector control

  Vector ...vector control.

  (Parameters without any indication are valid for all control)
- "O" indicates enabled and "×" indicates disabled of "parameter copy", "parameter clear", and "all parameter clear".

Function	Parameter		Name	Increments	Initial Value	Range	Description	Parameter copy	Parameter clear	All parameter clear
		Related parameters						O: enabled ×: disabled		
Manual torque boost V/F	0	◎	Torque boost	0.1%	6/4/3/2/1% *	0 to 30%	Set the output voltage at 0Hz as %. * The initial value differs according to the inverter capacity. (0.4K, 0.75K / 1.5K to 3.7K / 5.5K, 7.5K / 11K to 55K / 75K or more)	O	O	O
		46	Second torque boost	0.1%	9999	0 to 30%	Set the torque boost when the RT signal is on.	O	O	O
						9999	Without second torque boost			
		112	Third torque boost	0.1%	9999	0 to 30%	Set the torque boost when the X9 signal is on.	O	O	O
						9999	Without third torque boost			
Maximum/minimum frequency V/F	1	◎	Maximum frequency	0.01Hz	120/60Hz*	0 to 120Hz	Set the upper limit of the output frequency. * The initial value differs according to the inverter capacity. (55K or less/75K or more)	O	O	O
	2	◎	Minimum frequency	0.01Hz	0Hz	0 to 120Hz	Set the lower limit of the output frequency.	O	O	O
		18	High speed maximum frequency	0.01Hz	120/60Hz*	120 to 400Hz	Set when performing the operation at 120Hz or more. * The initial value differs according to the inverter capacity. (55K or less/75k or more)	O	O	O
Base frequency, voltage	3	◎	Base frequency	0.01Hz	60Hz	0 to 400Hz	Set the frequency when the motor rated torque is generated. (50Hz/60Hz)	O	O	O
		19	Base frequency voltage	0.1V	9999	0 to 1000V	Set the base voltage.	O	O	O
						8888	95% of power supply voltage			
						9999	Same as power supply voltage			
		47	Second V/F (base frequency)	0.01Hz	9999	0 to 400Hz	Set the base frequency when the RT signal is on.	O	O	O
						9999	Second V/F is invalid			
		113	Third V/F (base frequency)	0.01Hz	9999	0 to 400Hz	Set the base frequency when the X9 signal is ON.	O	O	O
						9999	Third V/F is invalid			
Multi-speed setting operation	4	◎	Multi-speed setting (high speed)	0.01Hz	60Hz	0 to 400Hz	Set frequency when the RH signal is on.	O	O	O
	5	◎	Multi-speed setting (middle speed)	0.01Hz	30Hz	0 to 400Hz	Set frequency when the RM signal is on.	O	O	O
	6	◎	Multi-speed setting (low speed)	0.01Hz	10Hz	0 to 400Hz	Set frequency when the RL signal is on.	O	O	O
		24 to 27	Multi-speed setting (4 speed to 7 speed)	0.01Hz	9999	0 to 400Hz, 9999	Frequency from 4 speed to 15 speed can be set according to the combination of the RH, RM, RL and REX signals. 9999: not selected	O	O	O
		232 to 239	Multi-speed setting (8 speed to 15 speed)	0.01Hz	9999	0 to 400Hz, 9999		O	O	O

Function	Parameter	Related parameters	Name	Increments	Initial Value	Range	Description	Parameter copy	Parameter clear	All parameter clear
								○: enabled ×: disabled		
Acceleration/deceleration time setting	7	◎	Acceleration time	0.1/ 0.01s	5/15s *	0 to 3600/ 360s	Set the motor acceleration time. * The initial value differs according to the inverter capacity. (7.5K or less/11K or more)	○	○	○
	8	◎	Deceleration time	0.1/ 0.01s	10/30s *	0 to 3600/ 360s	Set the motor deceleration time. * The initial value differs according to the inverter capacity. (7.5K or less/11K or more)	○	○	○
		20	Acceleration/ deceleration reference frequency	0.01Hz	60Hz	1 to 400Hz	Set the frequency referenced as acceleration/deceleration time. Set the frequency change time from stop to *Pr. 20* for acceleration/deceleration time.	○	○	○
		21	Acceleration/ deceleration time increments	1	0	0	Increments: 0.1s Range: 0 to 3600s	○	○	○
						1	Increments: 0.01s Range: 0 to 360s			
							The increments and setting range of acceleration/ deceleration time setting can be changed.			
		44	Second acceleration/ deceleration time	0.1/ 0.01s	5s	0 to 3600/ 360s	Set the acceleration/deceleration time when the RT signal is on.	○	○	○
		45	Second deceleration time	0.1/ 0.01s	9999	0 to 3600/ 360s	Set the deceleration time when the RT signal is on.	○	○	○
						9999	Acceleration time = deceleration time			
		110	Third acceleration/ deceleration time	0.1/ 0.01Hz	9999	0 to 3600/ 360s	Set the acceleration/deceleration time when the X9 signal is on.	○	○	○
						9999	Function invalid			
		111	Third deceleration time	0.1/ 0.01Hz	9999	0 to 3600/ 360s	Set the deceleration time when the X9 signal is on.	○	○	○
						9999	Acceleration time = deceleration time			
Motor protection from overheat (electronic thermal relay function)	9	◎	Electronic thermal O/L relay	0.01/ 0.1A *	Rated inverter output current	0 to 500/ 0 to 3600A *	Set the rated motor current. * The increments and setting range differ according to the inverter capacity. (55K or less/75k or more)	○	○	○
		51	Second electronic thermal O/L relay	0.01/ 0.1A *	9999	0 to 500/ 0 to 3600A *	Made valid when the RT signal is on. Set the rated motor current. * The increments and setting range differ according to the inverter capacity. (55K or less/75k or more)	○	○	○
						9999	Second electronic thermal O/L relay invalid			
DC injection brake	10		DC injection brake operation frequency	0.01Hz	3/0.5Hz*	0 to 120Hz	Set the operation frequency of the DC injection brake. * The initial value changes from 3Hz to 0.5Hz when a control mode other than vector is changed to vector control.	○	○	○
						9999	Operate when the output frequency becomes less than or equal to *Pr. 13 Starting frequency*.			
	11		DC injection brake operation time	0.1s	0.5s	0	DC injection brake disabled	○	○	○
						0.1 to 10s	Set the operation time of the DC injection brake.			
						8888	Operated while the X13 signal is on.			
	12		DC injection brake operation voltage	0.1%	4/2/1% *	0	DC injection brake disabled	○	○	○
						0.1 to 30%	Set the DC injection brake voltage (torque). * The initial value differs according to the inverter capacity. (7.5K or less/11K to 55K/ 75K or more)			
		802	Pre-excitation selection	1	0	0	Zero speed control	○	○	○
						1	Servo lock			
							Setting can be made under vector control.			
		850	Brake operation selection	1	0	0	DC injection brake	○	○	○
						1	Zero speed control (under real sensorless vector control)			

勝 特 力 材 料 886-3-5753170
胜特力电子(上海) 86-21-34970699
胜特力电子(深圳) 86-755-83298787
Http://www.100y.com.tw

Function	Parameter	Related parameters	Name	Increments	Initial Value	Range	Description	Parameter copy	Parameter clear	All parameter clear
								○: enabled ×: disabled		
Starting frequency	13		Starting frequency	0.01Hz	0.5Hz	0 to 60Hz	Starting frequency can be set.	○	○	○
		571	Holding time at a start	0.1s	9999	0.0 to 10.0s	Set the holding time of *Pr. 13 Starting frequency*.	○	○	○
						9999	Holding function at a start is invalid			
V/F pattern matching applications V/F	14		Load pattern selection	1	0	0	For constant torque load	○	○	○
						1	For variable-torque load			
						2	For constant torque lift: Boost for reverse rotation 0%			
						3	For constant torque lift: Boost for forward rotation 0%			
						4	RT signal ON ....For constant-torque load (Same as in setting 0) RT signal OFF ...For constant-torque lift Boost for reverse rotation 0% (Same as in setting 2)			
						5	RT signal ON ....For constant-torque load (Same as in setting 0) RT signal OFF ...For constant-torque lift Boost for forward rotation 0% (Same as in setting 3)			
Jog operation	15		Jog frequency	0.01Hz	5Hz	0 to 400Hz	Set the frequency for jog operation.	○	○	○
	16		Jog acceleration/ deceleration time	0.1/ 0.01s	0.5s	0 to 3600/ 360s	Set the acceleration/deceleration time for jog operation. Set the time taken to reach the frequency set in *Pr. 20 Acceleration/ deceleration reference frequency* for acceleration/deceleration time. (Initial value is 60Hz) In addition, acceleration/deceleration time can not be set separately.	○	○	○
Logic selection of output stop signal (MRS)	17		MRS input selection	1	0	0	Open input always	○	○	○
						2	Normally closed input (NC contact input specifications)			
—	18		Refer to *Pr. 1 and Pr. 2*.							
	19		Refer to *Pr. 3*.							
	20, 21		Refer to *Pr. 7 and Pr. 8*.							

勝 特 力 材 料 886-3-5753170
胜特力电子(上海) 86-21-34970699
胜特力电子(深圳) 86-755-83298787
Http://www.100y.com.tw

Function	Parameter	Related parameters	Name	Increments	Initial Value	Range	Description	Parameter copy	Parameter clear	All parameter clear
								○: enabled ×: disabled		
Stall prevention operation V/F Magnetic flux	22		Stall prevention operation level	0.1%	150%	0	Stall prevention operation selection becomes invalid.	○	○	○
						0.1 to 400%	Function as stall prevention operation under V/F control and advanced magnetic flux vector control. Set the current value at which stall prevention operation is started. Refer to *page 92* for torque limit level.			
	23		Stall prevention operation level compensation factor at double speed	0.1%	9999	0 to 200%	The stall operation level can be reduced when operating at a high speed above the rated frequency.	○	○	○
						9999	Constant according to *Pr. 22*			
		48	Second stall prevention operation current	0.1%	150%	0	Second stall prevention operation invalid	○	○	○
						0.1 to 220%	The stall prevention operation level can be set.			
		49	Second stall prevention operation frequency	0.01Hz	0Hz	0	Second stall prevention operation invalid	○	○	○
						0.01 to 400Hz	Set the frequency at which stall prevention operation of *Pr. 48* is started.			
						9999	*Pr.48* is valid when the RT signal is on.			
		66	Stall prevention operation reduction starting frequency	0.01Hz	60Hz	0 to 400Hz	Set the frequency at which the stall operation level is started to reduce.	○	○	○
		114	Third stall prevention operation current	0.1%	150%	0	Third stall prevention operation invalid	○	○	○
						0.1 to 220%	The stall prevention operation level can be set.			
		115	Thrid stall prevention operation frequency	0.01Hz	0	0	Third stall prevention operation invalid	○	○	○
						0.01 to 400Hz	Set the frequency at which stall prevention operation of *Pr. 114* is started.			
		148	Stall prevention level at 0V input	0.1%	150%	0 to 220%	When "4" is set in *Pr. 868* (*Pr. 858*), stall prevention operation level can be changed by the analog signal input to terminal 1 (terminal 4).	○	○	○
		149	Stall prevention level at 10V input	0.1%	200%	0 to 220%		○	○	○
		154	Voltage reduction selection during stall prevention operation	1	1	0	With voltage reduction / You can select whether to use output voltage reduction during stall prevention operation or not.	○	○	○
						1	Without voltage reduction			
		156	Stall prevention operation selection	1	0	0 to 31, 100, 101	*Pr. 156* allows you to select whether to use stall prevention or not according to the acceleration/deceleration status.	○	○	○
		157	OL signal output timer	0.1s	0s	0 to 25s	Set the output start time of the OL signal output when stall prevention is activated.	○	○	○
						9999	Without the OL signal output			
		858	Terminal 4 function assignment	Refer to *page 125*.						
		868	Terminal 1 function assignment							

勝 特 力 材 料 886-3-5753170
胜特力电子(上海) 86-21-34970699
胜特力电子(深圳) 86-755-83298787
Http://www.100y.com.tw

Function	Parameter	Related parameters	Name	Increments	Initial Value	Range	Description	Parameter copy	Parameter clear	All parameter clear
								○: enabled ×: disabled		
Torque limit level (Sensorless Vector)	22		Torque limit level	0.1%	150/ 200% *	0 to 400%	This functions as torque limit level under real sensorless vector control. * For the 3.7K or less, the initial value changes from 150% to 200% when V/F control or advanced magnetic flux vector is changed to real sensorless vector control or vector control. Refer to *page 91* for stall prevention operation level.	○	○	○
		803	Constant power range torque characteristic selection	1	0	0	Constant output limit (torque current limit and control)	○	○	○
						1	Constant torque limit (torque limit and control)			
		810	Torque limit input method selection	1	0	0	Internal torque limit Parameter-set torque limit operation is performed.	○	○	○
						1	External torque limit Torque limit based on the analog input from terminal 1 and 4.			
		811	Set resolution switchover	1	0	0	Running speed increments: 1r/min Torque limit increments: 0.1% increments	○	○	○
						1	0.1r/min			
						10	1r/min 0.01% increments			
						11	0.1r/min			
		812	Torque limit level (regeneration)	0.1%	9999	0 to 400%	Set the torque limit level for forward rotation regeneration.	○	○	○
						9999	*Pr. 22* value is used for limit.			
		813	Torque limit level (3rd quadrant)	0.1%	9999	0 to 400%	Set the torque limit level for reverse rotation driving.	○	○	○
						9999	*Pr. 22* value is used for limit.			
		814	Torque limit level (4th quadrant)	0.1%	9999	0 to 400%	Set the torque limit level for reverse rotation regeneration.	○	○	○
						9999	*Pr. 22* value is used for limit.			
		815	Torque limit level 2	0.1%	9999	0 to 400%	When the torque limit selection (TL) signal is on, the *Pr. 815* value is a torque limit value regardless of *Pr. 810*.	○	○	○
						9999	Depending on *Pr. 22* setting			
		816	Torque limit level during acceleration	0.1%	9999	0 to 400%	Set the torque limit value during acceleration.	○	○	○
						9999	Same torque limit as at constant speed			
		817	Torque limit level during deceleration	0.1%	9999	0 to 400%	Set the torque limit value during deceleration.	○	○	○
						9999	Same torque limit as at constant speed			
		874	OLT level setting	0.1%	150%	0 to 200%	This function can make an alarm stop if the torque limit is activated to stall the motor. Set the output torque at which an alarm stop is made in *Pr. 874* .	○	○	○
—	24 to 27		Refer to *Pr. 4 to Pr. 6*.							
Input compensation of multi-speed and remote setting	28		Multi-speed input compensation selection	1	0	0	Without compensation	○	○	○
						1	With compensation			

勝 特 力 材 料 886-3-5753170
胜特力电子(上海) 86-21-34970699
胜特力电子(深圳) 86-755-83298787
Http://www.100y.com.tw

勝 特 力 材 料 886-3-5753170
胜特力电子(上海) 86-21-34970699
胜特力电子(深圳) 86-755-83298787
Http://www.100y.com.tw

Function	Parameter	Related parameters	Name	Increments	Initial Value	Range	Description	Parameter copy	Parameter clear	All parameter clear
								○: enabled ×: disabled		
Acceleration/deceleration pattern and backlash measures	29		Acceleration/ deceleration pattern selection	1	0	0	Linear acceleration/ deceleration	○	○	○
						1	S-pattern acceleration/deceleration A			
						2	S-pattern acceleration/deceleration B			
						3	Backlash measures			
						4	S-pattern acceleration/deceleration C			
						5	S-pattern acceleration/deceleration D			
		140	Backlash acceleration stopping frequency	0.01Hz	1Hz	0 to 400Hz	Set the stopping frequency and time for backlash measures. Valid when *Pr. 29* = "3"	○	○	○
		141	Backlash acceleration stopping time	0.1s	0.5s	0 to 360s		○	○	○
		142	Backlash deceleration stopping frequency	0.01Hz	1Hz	0 to 400Hz		○	○	○
		143	Backlash deceleration stopping time	0.1s	0.5s	0 to 360s		○	○	○
		380	Acceleration S-pattern 1	1%	0%	0 to 50%	Valid when S-pattern acceleration/ deceleration C (*Pr. 29* = 4) is set. Set the time taken for S-pattern from starting of acceleration/deceleration to linear acceleration as % to the acceleration/deceleration time (*Pr. 7*, *Pr. 8*, etc.) An acceleration/deceleration pattern can be changed with the X20 signal.	○	○	○
		381	Deceleration S-pattern 1	1%	0%	0 to 50%		○	○	○
		382	Acceleration S-pattern 2	1%	0%	0 to 50%		○	○	○
		383	Deceleration S-pattern 2	1%	0%	0 to 50%		○	○	○
		516	S-pattern time at a start of acceleration	0.1s	0.1s	0.1 to 2.5s	Valid when S-pattern acceleration/ deceleration D (*Pr. 29* = 5) is set. Set the time taken for S-pattern acceleration/deceleration (S-pattern operation).	○	○	○
		517	S-pattern time at a completion of acceleration	0.1s	0.1s	0.1 to 2.5s		○	○	○
		518	S-pattern time at a start of deceleraiton	0.1s	0.1s	0.1 to 2.5s		○	○	○
		519	S-pattern time at a completion of deceleraiton	0.1s	0.1s	0.1 to 2.5s		○	○	○
Selection of regeneration unit	30		Regenerative function selection	1	0	0	Built-in brake, brake unit (FR-BU, BU)	○	○	○
						1	High-duty brake resistor (FR-ABR), Brake unit (MT-BU5), Power regeneration converter (MT-RC)			
						2	High power factor converter (FR-HC, MT-HC), Power regeneration common converter (FR-CV)			
						10	Built-in brake unit, brake unit (FR-BU, BU) — DC feeding mode 1 (operated by DC feeding only)			
						11	High-duty brake resistor (FR-ABR), brake unit (MT-BU5) — DC feeding mode 1 (operated by DC feeding only)			
						20	Built-in brake unit, brake unit (FR-BU, BU) — DC feeding mode 2 (operated by switching between AC and DC)			
						21	High-duty brake resistor (FR-ABR), brake unit (MT-BU5) — DC feeding mode 2 (operated by switching between AC and DC)			
		70	Special regenerative brake duty	0.1%	0%	0 to 30/ 0 to 10%*	You can set the brake duty when a brake unit or power regeneration converter is used. * Range differ according to the inverter capacity. (55K or less/75K or more)	○	○	○

Function	Parameter	Related parameters	Name	Increments	Initial Value	Range	Description	Parameter copy	Parameter clear	All parameter clear
								○: enabled ×: disabled		
Avoid mechanical resonance points (frequency jump)	31		Frequency jump 1A	0.01Hz	9999	0 to 400Hz, 9999	1A to 1B, 2A to 2B, 3A to 3B is frequency jumps 9999: Function invalid	○	○	○
	32		Frequency jump 1B	0.01Hz	9999	0 to 400Hz, 9999		○	○	○
	33		Frequency jump 2A	0.01Hz	9999	0 to 400Hz, 9999		○	○	○
	34		Frequency jump 2B	0.01Hz	9999	0 to 400Hz, 9999		○	○	○
	35		Frequency jump 3A	0.01Hz	9999	0 to 400Hz, 9999		○	○	○
	36		Frequency jump 3B	0.01Hz	9999	0 to 400Hz, 9999		○	○	○
Speed display and speed setting	37		Speed display	1	0	0	Frequency display, setting	○	○	○
						1 to 9998	Set the machine speed for *Pr.505* Set frequency.			
		144	Speed setting switchover	1	4	0, 2, 4, 6, 8, 10, 102, 104, 106, 108, 110	Set the number of motor poles when displaying the motor speed.	○	○	○
		505	Speed setting reference	0.01Hz	60Hz	1 to 120Hz	Set the frequency that will be the basis of machine speed display.	○	○	○
		811	Easy gain tuning response level setting	1	0		**Running speed increments** / **Torque limit increments**	○	○	○
						0	1r/min / 0.1% increments			
						1	0.1r/min			
						10	1r/min / 0.01% increments			
						11	0.1r/min			
Detection of output fequecny and motor speed (SU, FU, FU2, FU3, FB, FB2, FB3, LS signal)	41		Up-to-frequency sensitivity	0.1%	10%	0 to 100%	Set the level where the SU signal turns on.	○	○	○
	42		Output frequency detection	0.01Hz	6Hz	0 to 400Hz	Set the frequency where the FU (FB) signal turns on.	○	○	○
	43		Output frequency detection for reverse rotation	0.01Hz	9999	0 to 400Hz	Set the frequency where the FU (FB) signal turns on in reverse rotation.	○	○	○
						9999	Same as *Pr. 42* setting			
		50	Second output frequency detection	0.01Hz	30Hz	0 to 400Hz	Set the frequency where the FU2 (FB2) signal turns on.	○	○	○
		116	Third output frequency detection	0.01Hz	60Hz	0 to 400Hz	Set the frequency where the FU3 (FB3) signal turns on.	○	○	○
		865	Low speed detection	0.01Hz	1.5Hz	0 to 400Hz	Set the frequency where the LS signal turns on.	○	○	○
—	44, 45		Refer to *Pr. 7 and Pr. 8*.							
	46		Refer to *Pr. 0*.							
	47		Refer to *Pr. 3*.							
	48, 49		Refer to *Pr. 22 and Pr. 23*.							
	50		Refer to *Pr. 41 to Pr. 43*.							
	51		Refer to *Pr. 9*.							

勝 特 力 材 料 886-3-5753170
胜特力电子(上海) 86-21-34970699
胜特力电子(深圳) 86-755-83298787
Http://www.100y.com.tw

Function	Parameter	Related parameters	Name	Increments	Initial Value	Range	Description	Parameter copy	Parameter clear	All parameter clear
								○: enabled ×: disabled		
Change of DU/PU monitor descriptions Cumulative monitor clear	52		DU/PU main display data selection	1	0	0, 5 to 14, 17 to 20, 22 to 25, 32 to 35, 50 to 57,100	Select monitor to be displayed on the operation panel and parameter unit and monitor to be output to the terminal FM and AM. 0 : Output frequency *(Pr. 52)* 1 : Output frequency *(Pr. 54, Pr. 158)* 2 : Output current *(Pr. 54, Pr. 158)* 3 : Output voltage *(Pr. 54, Pr. 158)* 5 : Frequency setting 6 : Running speed 7 : Motor torque 8 : Converter output voltage 9 : Regenerative brake duty 10 : Electronic thermal relay function load factor 11 : Output current peak value 12 : Converter output voltage peak value 13 : Input power 14 : Output power 17 : Load meter 18 : Motor excitation current 19 : Position pulse* *(Pr. 52)* 20 : Cumulative energization time *(Pr. 52)* 21 : Reference voltage output *(Pr. 54, Pr. 158)* 22 : Orientation status* *(Pr. 52)* 23 : Actual operation time *(Pr. 52)* 24 : Motor load factor 25 : Cumulative power *(Pr. 52)* 32 : Torque command 33 : Torque current command 34 : Motor output 35 : Feedback pulse* *(Pr. 52)* 50 : Power saving effect 51 : Cumulative saving power *(Pr. 52)* 52 : PID set point 53 : PID measured value 54 : PID deviation *(Pr. 52)* 55 : Input/output terminal status *(Pr. 52)* 56 : Option input terminal status *(Pr. 52)* 57 : Option output terminal status *(Pr. 52)* 100 : Set frequency is displayed during a stop and output frequency is displayed during operation *(Pr. 52)* * Available only when the FR-A7AP is mounted.	○	○	○
	54		FM terminal function selection	1	1	1 to 3, 5 to 14, 17, 18, 21, 24, 32 to 34, 50, 52, 53		○	○	○
		158	AM terminal function selection	1	1	1 to 3, 5 to 14, 17, 18, 21, 24, 32 to 34, 50, 52, 53		○	○	○
		170	Watt-hour meter clear	1	9999	0	Set "0" to clear the watt-hour meter monitor.	○	×	○
						10	Set the maximum value when monitoring from communication to 0 to 9999kWh.			
						9999	Set the maximum value when monitoring from communication to 0 to 65535kWh.			
		171	Operation hour meter clear	1	9999	0, 9999	Set "0" in the parameter to clear the watt-hour monitor. Setting "9999" has no effect.	×	×	×
		268	Monitor decimal digits selection	1	9999	0	Displays the monitor as integral value.	○	○	○
						1	Displays the monitor in increments of 0.1.			
						9999	No fixed decimal position			
		563	Energization time carrying-over times	1	0	(0 to 65535)	The numbers of cumulative energization time monitor exceeded 65535h is displayed. Reading only	×	×	×
		564	Operating time carrying-over times	1	0	(0 to 65535)	The numbers of operation time monitor exceeded 65535h is displayed. Reading only	×	×	×
		867	AM output filter	0.01s	0.01s	0 to 5s	Set the output filter of terminal AM.	○	○	○
		891	Cumulative power monitor digit shifted times	1	9999	0 to 4	Set the number of times to shift the cumulative power monitor digit. Clamp the monitor value at maximum.	○	○	○
						9999	No shift Clear the monitor value when it exceeds the maximum value.			

勝 特 力 材 料 886-3-5753170
胜特力电子(上海) 86-21-34970699
胜特力电子(深圳) 86-755-83298787
Http://www.100y.com.tw

勝 特 力 材 料 886-3-5753170
胜特力电子(上海) 86-21-34970699
胜特力电子(深圳) 86-755-83298787
Http://www.100y.com.tw

Function	Parameter	Related parameters	Name	Increments	Initial Value	Range	Description	Parameter copy	Parameter clear	All parameter clear
								○: enabled ×: disabled		
Change of the monitor output from terminal FM and AM	55		Frequency monitoring reference	0.01Hz	60Hz	0 to 400Hz	Set the full-scale value to output the output frequency monitor value to terminal FM and AM.	○	○	○
	56		Current monitoring reference	0.01/ 0.1A *	Rated inverter output current	0 to 500/ 0 to 3600A *	Set the full-scale value to output the output current monitor value to terminal FM and AM. * The increments and setting range differ according to the inverter capacity. (55K or less/75k or more)	○	○	○
		866	Torque monitoring reference	0.1%	150%	0 to 400%	Set the full-scale value to output the torque monitor value to terminal FM and AM.	○	○	○
Restart operation after instantaneous power failure	57		Restart coasting time	0.1s	9999	0	The coasting time is as follows: 1.5K or less ..... 0.5s, 2.2K to 7.5K ..... 1.0s, 11K to 55K ..... 3.0s, 75K or more 5.0s	○	○	○
						0.1 to 5s/ 0.1 to 30s *	Set the waiting time for inverter-triggered restart after an instantaneous power failure. * The setting range differs according to the inverter capacity (55K or less/75k or more)			
						9999	No restart			
	58		Restart cushion time	0.1s	1s	0 to 60s	Set a voltage starting time at restart.	○	○	○
		162	Automatic restart after instantaneous power failure selection	1	0	0	With frequency search	○	○	○
						1	Without frequency search (Reduced voltage system)			
						2	Encoder detection frequency			
						10	Frequency search at every start			
						11	Reduced voltage system at every start			
						12	Encoder detection frequency at every start			
		163	First cushion time for restart	0.1s	0s	0 to 20s	Set a voltage starting time at restart. Consider according to the magnitude of load (inertia moment/torque).	○	○	○
		164	First cushion voltage for restart	0.1%	0%	0 to 100%		○	○	○
		165	Stall prevention operation level for restart	0.1%	150%	0 to 220%	Consider the rated inverter current as 100% and set the stall prevention operation level during restart operation.	○	○	○
		299	Rotation direction detection selection at restarting	1	0	0	Without rotation direction detection	○	○	○
						1	With rotation direction detection			
						9999	When *Pr. 78* = "0", the rotation direction is detected. When *Pr. 78* = "1", "2", the rotation direction is not detected.			
		611	Acceleration time at a restart	0.1s	5/15s *	0 to 3600s	Set the acceleration time to reach the set frequency at a restart. * The initial value differs according to the inverter capacity. (55K or less/75k or more)	○	○	○
						9999	Acceleration time for restart is the normal acceleration time (e.g. *Pr. 7*).			
Remote setting function	59		Remote function selection	1	0		**RH, RM, RL signal function** / **Frequency setting storage function**	○	○	○
						0	Multi-speed setting / —			
						1	Remote setting / Yes			
						2	Remote setting / No			
						3	Remote setting / No (Turning STF/STR off clears remotely-set frequency.)			
Energy saving control selection V/F Magnetic flux	60		Energy saving control selection	1	0	0	Normal operation mode	○	○	○
						4	Energy saving operation mode			

Function	Parameter	Related parameters	Name	Increments	Initial Value	Range	Description		Parameter copy	Parameter clear	All parameter clear
									○: enabled ×: disabled		
Automatic acceleration/deceleration	61		Reference current	0.01/ 0.1A*	9999	0 to 500/ 0 to 3600A*	Setting value (rated motor current) is referenced * The increments and setting range differ according to the inverter capacity. (55K or less/75k or more)		○	○	○
						9999	Rated inverter current is referenced				
	62		Reference value at acceleration	0.1%	9999	0 to 220%	Setting value is a limit value	Shortest acceleration/ deceleration mode	○	○	○
							Setting value is an optimum value	Optimum acceleration/ deceleration mode			
						9999	150% is a limit value	Shortest acceleration/ deceleration mode			
							100% is an optimum value	Optimum acceleration/ deceleration mode			
	63		Reference value at deceleration	0.1%	9999	0 to 220%	Setting value is a limit value	Shortest acceleration/ deceleration mode	○	○	○
							Setting value is an optimum value	Optimum acceleration/ deceleration mode			
						9999	150% is a limit value	Shortest acceleration/ deceleration mode			
							100% is an optimum value	Optimum acceleration/ deceleration mode			
	64		Starting frequency for elevator mode	0.01Hz	9999	0 to 10Hz	0 to 10Hz are starting frequency		○	○	○
						9999	2Hz is starting frequency				
		292	Automatic acceleration/ deceleration	1	0	0	Normal mode		○	○	○
						1	Shortest acceleration/ deceleration mode	Without brake			
						11		With brake			
						3	Optimum acceleration/deceleration mode				
						5	Elevator mode 1				
						6	Elevator mode 2				
						7	Brake sequence mode 1				
						8	Brake sequence mode 2				
		293	Acceleration/ deceleration separate selection	1	0	0	Calculate acceleration/deceleration time of both acceleration and deceleration for the shortest and optimum acceleration/ deceleration mode.		○	○	○
						1	Calculate only acceleration time for the shortest and optimum acceleration/ deceleration mode				
						2	Calculate only deceleration time for the shortest and optimum acceleration/ deceleration mode				
Retry function at alarm occurrence	65		Retry selection	1	0	0 to 5	An alarm for retry can be selected.		○	○	○
		67	Number of retries at alarm occurrence	1	0	0	No retry function		○	○	○
						1 to 10	Set the number of retries at alarm occurrence. An alarm output is not provided during retry operation.				
						101 to 110	Set the number of retries at alarm occurrence. (The setting value minus 100 is the number of retries.) An alarm output is provided during retry operation.				
		68	Retry waiting time	0.1s	1s	0 to 10s	Set the waiting time from when an inverter alarm occurs until a retry is made.		○	○	○
		69	Retry count display erase	1	0	0	Clear the number of restarts succeeded by retry.		○	○	○
—	66		Refer to *Pr. 22 and Pr. 23*.								
	67 to 69		Refer to *Pr. 65*.								
	70		Refer to *Pr. 30*.								

勝 特 力 材 料 886-3-5753170
胜特力电子(上海) 86-21-34970699
胜特力电子(深圳) 86-755-83298787
Http://www.100y.com.tw

勝 特 力 材 料 886-3-5753170
胜特力电子(上海) 86-21-34970699
胜特力电子(深圳) 86-755-83298787
Http://www.100y.com.tw

Function	Parameter	Related parameters	Name	Increments	Initial Value	Range	Description		Parameter copy	Parameter clear	All parameter clear
									○: enabled ×: disabled		
Motor selection (applied motor)	71		Applied motor	1	0	0	Thermal characteristics of a standard motor		○	○	○
						1	Thermal characteristics of the Mitsubishi constant-torque motor				
						2	Thermal characteristic of standard motor Adjustable 5 points V/F				
						20	Mitsubishi standard motor (SF-JR 4P 1.5kW or less)				
						30	Thermal characteristics of the Mitsubishi vector motor SF-V5RU				
						40	Thermal characteristic of Mitsubishi high efficiency motor (SF-HR)				
						50	Thermal characteristic of Mitsubishi constant-torque motor (SF-HRCA)				
						3	Standard motor	Select "offline auto tuning setting"			
						13	Constant-torque motor				
						23	Mitsubishi standard motor (SF-JR 4P 1.5kW or less)				
						33	Mitsubishi vector motor (SF-V5RU/SF-THY)				
						43	Mitsubishi high efficiency motor (SF-HR)				
						53	Mitsubishi constant-torque motor (SF-HRCA)				
						4	Standard motor	Auto tuning data can be read, changed, and set.			
						14	Constant-torque motor				
						24	Mitsubishi standard motor (SF-JR 4P 1.5kW or less)				
						34	Mitsubishi vector motor (SF-V5RU/SF-THY)				
						44	Mitsubishi high efficiency motor (SF-HR)				
						54	Mitsubishi constant-torque motor (SF-HRCA)				
						5	Standard motor	Star connection Direct input of motor constants is enabled			
						15	Constant-torque motor				
						6	Standard motor	Delta connection Direct input of motor constants is enabled			
						16	Constant-torque motor				
						7	Standard motor	Star connection Motor constants direct input + Offline auto tuning			
						17	Constant-torque motor				
						8	Standard motor	Delta connection Motor constants direct input + Offline auto tuning			
						18	Constant-torque motor				
		450	Second applied motor	1	9999	0 to 8, 13 to 18, 20, 23, 24, 30, 33, 34, 40, 43, 44, 50, 53, 54	Set when using the second motor. (same specifications as *Pr. 71*)		○	○	○
						9999	Second motor is invalid				

Function	Parameter	Related parameters	Name	Increments	Initial Value	Range	Description	Parameter copy	Parameter clear	All parameter clear
								○: enabled ×: disabled		
Carrier frequency and SoftPWM selection	72		PWM frequency selection	1	2	0 to 15/ 0 to 6, 25 *	PWM carrier frequency can be changed. The setting displayed is in [kHz]. Note that 0 indicates 0.7kHz, 15 indicates 14.5kHz, 25 indicates 2.5. (25 is exclusively for a sine wave filter.) The following settings are for real sensorless vector control and vector control. 0 to 5: 2kHz, 6 to 9: 6kHz, 10 to 13: 10kHz, 14 to 15: 14kHz * The setting range differs according to the inverter capacity. (55K or less/75k or more)	○	○	○
		240	Soft-PWM operation selection	1	1	0	Soft-PWM invalid	○	○	○
						1	When *Pr. 72* = "0 to 5" ("0 to 4" for the 75K or more), Soft-PWM is valid.			
Analog input selection	73		Analog input selection	1	1	0 to 7, 10 to 17	You can select the input specifications of terminal 2 (0 to 5V, 0 to 10V, 4 to 20mA) and input specifications of terminal 1 (0 to ±5V, 0 to ±10V). For the 5.5K or more, the input specifications can be selected when the voltage/current input switch is off. Terminal 2 is always used for current input when the switch is on, the parameter needs to be set to current input. Override and reversible operation can be selected.	○	×	○
		242	Terminal 1 added compensation amount (terminal 2)	0.1%	100%	0 to 100%	Set the ratio of added compensation amount when terminal 2 is the main speed.	○	○	○
		243	Terminal 1 added compensation amount (terminal 4)	0.1%	75%	0 to 100%	Set the ratio of added compensation amount when terminal 4 is the main speed.	○	○	○
		252	Override bias	0.1%	50%	0 to 200%	Set the bias side compensation value of override function.	○	○	○
		253	Override gain	0.1%	150%	0 to 200%	Set the gain side compensation value of override function.	○	○	○
		267	Terminal 4 input selection	1	0	0	Terminal 4 input 4 to 20mA	○	×	○
						1	Terminal 4 input 0 to 5V			
						2	Terminal 4 input 0 to 10V			
							For the 5.5K or more, the input specifications can be selected when the voltage/current input switch is off. Set "0" when the switch is ON.			
Response level of analog input and noise elimination	74		Input filter time constant	1	1	0 to 8	The primary delay filter time constant for the analog input can be set. A larger setting results in a larger filter.	○	○	○
		822	Speed setting filter 1	0.001s	9999	0 to 5s, 9999	Set the time constant of the primary delay filter relative to the external speed command (analog input command).	○	○	○
		826	Torque setting filter 1	0.001s	9999	0 to 5s, 9999	Set the time constant of the primary delay filter relative to the external torque command (analog input command).	○	○	○
		832	Speed setting filter 2	0.001s	9999	0 to 5s, 9999	Second function of *Pr. 822* (valid when the RT terminal is on)	○	○	○
		836	Torque setting filter 2	0.001s	9999	0 to 5s, 9999	Second function of *Pr. 826* (valid when the RT terminal is on)	○	○	○
		849	Analog input offset adjustment	0.1%	100%	0 to 200%	This function provides speed command by analog input (terminal 2) with offset and avoids frequency command to be given due to noise under 0 speed command.	○	○	○

勝 特 力 材 料 886-3-5753170
胜特力电子(上海) 86-21-34970699
胜特力电子(深圳) 86-755-83298787
Http://www.100y.com.tw

Function	Parameter	Related parameters	Name	Increments	Initial Value	Range	Description	Parameter copy	Parameter clear	All parameter clear
								○: enabled ×: disabled		
Reset selection, disconnected PU detection	75		Reset selection/ disconnected PU detection/PU stop selection	1	14	0 to 3, 14 to 17	You can select the reset input acceptance, disconnected PU (FR-DU07/FR-PU07/FR-PU04) connector detection function and PU stop function. For the initial value, reset always enabled, without disconnected PU detection, and with PU stop function are set.	○	×	×
Output function of alarm code	76		Alarm code output selection	1	0	0	Without alarm code output	○	○	○
						1	With alarm code output			
						2	Alarm code output at alarm occurrence only			
Prevention of parameter rewrite	77		Parameter write selection	1	0	0	Write is enabled only during a stop	○	○	○
						1	Parameter write is disabled.			
						2	Parameter write is enabled in any operation mode regardless of operation status.			
Prevention of reverse rotation of the motor	78		Reverse rotation prevention selection	1	0	0	Both forward and reverse rotations allowed	○	○	○
						1	Reverse rotation disallowed			
						2	Forward rotation disallowed			
Operation mode selection	79	◎	Operation mode selection	1	0	0	External/PU switchover mode	○	○	○
						1	Fixed to PU operation mode			
						2	Fixed to External operation mode			
						3	External/PU combined operation mode 1			
						4	External/PU combined operation mode 2			
						6	Switchover mode			
						7	External operation mode (PU operation interlock)			
		340	Communication startup mode selection	1	0	0	As set in *Pr. 79*.	○	○	○
						1, 2	Started in the network operation mode. When the setting is "2", it will resume the pre-instantaneous power failure operation mode after an instantaneous power failure occurs.			
						10, 12	Started in the network operation mode. Operation mode can be changed between the PU operation mode and network operation mode from the operation panel. When the setting is "12", it will resume the pre-instantaneous power failure operation mode after an instantaneous power failure occurs.			

勝 特 力 材 料 886-3-5753170
胜特力电子(上海) 86-21-34970699
胜特力电子(深圳) 86-755-83298787
Http://www.100y.com.tw

Function	Parameter	Related parameters	Name	Increments	Initial Value	Range	Description	Parameter copy	Parameter clear	All parameter clear
								○: enabled ×: disabled		
Selection of control method (Magnetic flux / Sensorless / Vector)	80		Motor capacity	0.01/ 0.1kW *	9999	0.4 to 55/ 0 to 3600kW *	Set the applied motor capacity. * The increments and setting range differ according to the inverter capacity. (55K or less/75k or more)	○	○	○
						9999	V/F control is performed			
	81		Number of motor poles	1	9999	2, 4, 6, 8, 10	Set the number of motor poles.	○	○	○
						12, 14, 16, 18, 20	X18 signal-ON:V/F control; Set 10 + number of motor poles.			
						9999	V/F control is performed			
		89	Speed control gain (magnetic flux vector)	0.1%	9999	0 to 200%	Motor speed fluctuation due to load fluctuation is adjusted during advanced magnetic flux vector control. 100% is a referenced value.	○	×	○
						9999	Gain matching with the motor set in *Pr.71*.			
		451	Second motor control method selection	1	9999	10, 11, 12	Select the method of controlling the second motor. (same as *Pr.800*)	○	○	○
						20, 9999	V/F Control (advanced magnetic flux vector control)			
		453	Second motor capacity	0.01/ 0.1kW *	9999	0.4 to 55/ 0 to 3600kW *	Set the capacity of the second motor. * The increments and setting range differ according to the inverter capacity. (55K or less/75k or more)	○	○	○
						9999	V/F control is performed			
		454	Number of second motor poles	1	9999	2, 4, 6, 8, 10	Set the number of poles of the second motor.	○	○	○
						9999	V/F control is performed			
		569	Second motor speed control gain	0.1%	9999	0 to 200%	Second motor speed fluctuation due to load fluctuation is adjusted during advanced magnetic flux vector control. 100% is a referenced value.	○	×	○
						9999	Gain matching with the motor set in *Pr.450*.			
		800	Control method selection	1	20	0	Speed control (Vector control (FR-A7AP))	○	○	○
						1	Torque control (Vector control (FR-A7AP))			
						2	MC signal-ON:torque MC signal-OFF:speed (Vector control (FR-A7AP))			
						3	Position control (Vector control (FR-A7AP))			
						4	MC signal-ON:position MC signal-OFF:speed (Vector control (FR-A7AP))			
						5	MC signal-ON:torque MC signal-OFF:position (Vector control (FR-A7AP))			
						9	Vector control test operation Test operation of vector control (speed control) can be performed without connecting a motor.			
						10	Speed control (Real sensorless vector control)			
						11	Torque control (Real sensorless vector control)			
						12	MC signal-ON : Torque MC signal-OFF : Speed (Real sensorless vector control)			
						20	V/F Control (advanced magnetic flux vector control)			

勝 特 力 材 料 886-3-5753170
胜特力电子(上海) 86-21-34970699
胜特力电子(深圳) 86-755-83298787
Http://www.100y.com.tw

Function	Parameter	Related parameters	Name	Increments	Initial Value	Range	Description	Parameter copy	Parameter clear	All parameter clear
								○: enabled ×: disabled		
Offline auto tuning Magnetic flux Sensorless Vector	82		Motor excitation current	0.01/ 0.1A *	9999	0 to 500/ 0 to 3600A *	Tuning data (The value measured by offline auto tuning is automatically set.) * The increments and setting range differ according to the inverter capacity. (55K or less/75k or more)	○	×	○
						9999	Use the Mitsubishi motor (SF-JR, SF-HRCA) constants			
	83		Motor rated voltage	0.1V	200/ 400V *	0 to 1000V	Set the rated motor voltage(V). * The initial values differ according to the voltage level. (200V/400V)	○	○	○
	84		Rated motor frequency	0.01Hz	60Hz	10 to 120Hz	Set the rated motor frequency (Hz).	○	○	○
		90	Motor constant (R1)	0.001Ω/ 0.01mΩ *	9999	0 to 50Ω/ 0 to 400mΩ *	Tuning data (The value measured by offline auto tuning is automatically set.) * The increments and setting range differ according to the inverter capacity. (55K or less/75k or more)	○	×	○
						9999	Use the Mitsubishi motor (SF-JR, SF-HRCA) constants			
		91	Motor constant (R2)	0.001Ω/ 0.01mΩ *	9999	0 to 50Ω/ 0 to 400mΩ *	Tuning data (The value measured by offline auto tuning is automatically set.) * The increments and setting range differ according to the inverter capacity. (55K or less/75k or more)	○	×	○
						9999	Use the Mitsubishi motor (SF-JR, SF-HRCA) constants			
		92	Motor constant (L1)	0.001Ω (0.1mH) /0.01mΩ (0.01mH) *	9999	0 to 50Ω (0 to 1000mH)/ 0 to 3600mΩ (0 to 400mH) *	Tuning data (The value measured by offline auto tuning is automatically set.) * The increments and setting range differ according to the inverter capacity. (55K or less/75k or more)	○	×	○
						9999	Use the Mitsubishi motor (SF-JR, SF-HRCA) constants			
		93	Motor constant (L2)	0.001Ω (0.1mH) /0.01mΩ (0.01mH) *	9999	0 to 50Ω (0 to 1000mH)/ 0 to 3600mΩ (0 to 400mH) *	Tuning data (The value measured by offline auto tuning is automatically set.) * The increments and setting range differ according to the inverter capacity. (55K or less/75k or more)	○	×	○
						9999	Use the Mitsubishi motor (SF-JR, SF-HRCA) constants			
		94	Motor constant (X)	0.01Ω (0.1%)/ 0.01Ω (0.01%) *	9999	0 to 500Ω (0 to 100%)/ 0 to 100Ω (0 to 100%) *	Tuning data (The value measured by offline auto tuning is automatically set.) * The increments and setting range differ according to the inverter capacity. (55K or less/75k or more)	○	×	○
						9999	Use the Mitsubishi motor (SF-JR, SF-HRCA) constants			
		96	Auto tuning setting/ status	1	0	0	Auto tuning is not performed	○	×	○
						1	Tuning performed without motor running			
						101	Tuning performed with motor running			
		455	Second motor excitation current	0.01/ 0.1A *	9999	0 to 500/ 0 to 3600A *	Tuning data of the second motor (The value measured by offline auto tuning is automatically set.) * The increments and setting range differ according to the inverter capacity. (55K or less/75k or more)	○	×	○
						9999	Use the Mitsubishi motor (SF-JR, SF-HRCA) constants			
		456	Rated second motor voltage	0.1V	200/ 400V *	0 to 1000V	Set the rated voltage (V) of the second motor. * The initial values differ according to the voltage level. (200V/400V)	○	○	○
		457	Rated second motor frequency	0.01Hz	60Hz	10 to 120Hz	Set the rated frequency (Hz) of the second motor.	○	○	○

勝 特 力 材 料 886-3-5753170
胜特力电子(上海) 86-21-34970699
胜特力电子(深圳) 86-755-83298787
Http://www.100y.com.tw

勝 特 力 材 料 886-3-5753170
胜特力电子(上海) 86-21-34970699
胜特力电子(深圳) 86-755-83298787
Http://www.100y.com.tw

Function	Parameter	Related parameters	Name	Increments	Initial Value	Range	Description	Parameter copy	Parameter clear	All parameter clear
								○: enabled ×: disabled		
Offline auto tuning (Magnetic flux / Sensorless / Vector)		458	Second motor constant (R1)	0.001Ω/ 0.01mΩ *	9999	0 to 50Ω/ 0 to 400mΩ *	Tuning data of the second motor (The value measured by offline auto tuning is automatically set.) * The increments and setting range differ according to the inverter capacity. (55K or less/75k or more)	○	×	○
						9999	Use the Mitsubishi motor (SF-JR, SF-HRCA) constants			
		459	Second motor constant (R2)	0.001Ω/ 0.01mΩ *	9999	0 to 50Ω/ 0 to 400mΩ *	Tuning data of the second motor (The value measured by offline auto tuning is automatically set.) * The increments and setting range differ according to the inverter capacity. (55K or less/75k or more)	○	×	○
						9999	Use the Mitsubishi motor (SF-JR, SF-HRCA) constants			
		460	Second motor constant (L1)	0.001Ω (0.1mH)/ 0.01mΩ (0.01mH) *	9999	0 to 50Ω (0 to 1000mH)/ 0 to 3600mΩ (0 to 400mH) *	Tuning data of the second motor (The value measured by offline auto tuning is automatically set.) * The increments and setting range differ according to the inverter capacity. (55K or less/75k or more)	○	×	○
						9999	Use the Mitsubishi motor (SF-JR, SF-HRCA) constants			
		461	Second motor constant (L2)	0.001Ω (0.1mH) /0.01mΩ (0.01mH) *	9999	0 to 50Ω (0 to 1000mH)/ 0 to 3600mΩ (0 to 400mH) *	Tuning data of the second motor (The value measured by offline auto tuning is automatically set.) * The increments and setting range differ according to the inverter capacity. (55K or less/75k or more)	○	×	○
						9999	Use the Mitsubishi motor (SF-JR, SF-HRCA) constants			
		462	Second motor constant (X)	0.01Ω (0.1%)/ 0.01mΩ (0.01%) *	9999	0 to 500Ω (0 to 100%)/ 0 to 100Ω (0 to 100%) *	Tuning data of the second motor (The value measured by offline auto tuning is automatically set.) * The increments and setting range differ according to the inverter capacity. (55K or less/75k or more)	○	×	○
						9999	Use the Mitsubishi motor (SF-JR, SF-HRCA) constants			
		463	Second motor auto tuning setting/status	1	0	0, 1, 101	Set the tuning mode of the second motor. (same as *Pr. 96*)	○	×	○
		684	Tuning data unit switchover	1	0	0	Internal data converter value	○	○	○
						1	Displayed in "A, Ω, mH, %".			
		859	Torque current	0.01/ 0.1A *	9999	0 to 500/ 0 to 3600A *	Tuning data (The value measured by offline auto tuning is automatically set.) * The increments and setting range differ according to the inverter capacity. (55K or less/75k or more)	○	×	○
						9999	Use the Mitsubishi motor (SF-JR, SF-HRCA) constants			
		860	Second motor torque current	0.01/ 0.1A *	9999	0 to 500/ 0 to 3600A *	Tuning data of the second motor (The value measured by offline auto tuning is automatically set.) * The increments and setting range differ according to the inverter capacity. (55K or less/75k or more)	○	×	○
						9999	Use the Mitsubishi motor (SF-JR, SF-HRCA) constants			
—	89		Refer to *Pr. 81*.							
	90 to 94		Refer to *Pr. 82* to *Pr. 84*.							
Online auto tuning (Magnetic flux / Sensorless / Vector)	95		Online auto tuning selection	1	0	0	Online auto tuning is not performed	○	○	○
						1	Start-time tuning (at start-up)			
						2	Magnetic flux observer (normal)			
		574	Second motor online auto tuning	1	0	0, 1	Select the second motor online auto tuning. (same as *Pr. 95*)	○	○	○

Function	Parameter	Related parameters	Name	Increments	Initial Value	Range	Description	Parameter copy	Parameter clear	All parameter clear
								○: enabled ×: disabled		
—	96		Refer to *Pr. 82* to *Pr. 84*.							
Adjustable 5 points V/F (V/F)	100		V/F1(first frequency)	0.01Hz	9999	0 to 400Hz, 9999	Set each points (frequency, voltage) of V/F pattern. 9999: No V/F setting	○	○	○
	101		V/F1(first frequency voltage)	0.1V	0V	0 to 1000V		○	○	○
	102		V/F2(second frequency)	0.01Hz	9999	0 to 400Hz, 9999		○	○	○
	103		V/F2(second frequency voltage)	0.1V	0V	0 to 1000V		○	○	○
	104		V/F3(third frequency)	0.01Hz	9999	0 to 400Hz, 9999		○	○	○
	105		V/F3(third frequency voltage)	0.1V	0V	0 to 1000V		○	○	○
	106		V/F4(fourth frequency)	0.01Hz	9999	0 to 400Hz, 9999		○	○	○
	107		V/F4(fourth frequency voltage)	0.1V	0V	0 to 1000V		○	○	○
	108		V/F5(fifth frequency)	0.01Hz	9999	0 to 400Hz, 9999		○	○	○
	109		V/F5(fifth frequency voltage)	0.1V	0V	0 to 1000V		○	○	○
		71	Refer to *page 98*.							
—	110, 111		Refer to *Pr. 7*.							
	112		Refer to *Pr. 0*.							
	113		Refer to *Pr. 3*.							
	114, 115		Refer to *Pr. 22*.							
	116		Refer to *Pr. 41*.							
RS-485 communication initial setting	117		PU communication station number	1	0	0 to 31	Specify the inverter station number. Set the inverter station numbers when two or more inverters are connected to one personal computer.	○	○	○
	118		PU communication speed	1	192	48, 96, 192, 384	Set the communication speed. The setting value × 100 equals the communication speed. For example, the communication speed is 19200bps when the setting value is "192".	○	○	○
	119		PU communication stop bit length	1	1	0	Stop bit length: 1bit data length: 8bit	○	○	○
						1	Stop bit length: 2bit data length: 8bit			
						10	Stop bit length: 1bit data length: 7bit			
						11	Stop bit length: 2bit data length: 7bit			
	120		PU communication parity check	1	2	0	Without parity check	○	○	○
						1	With odd parity check			
						2	With even parity check			
	121		Number of PU communication retries	1	1	0 to 10	Set the permissible number of retries at occurrence of a data receive error. If the number of consecutive errors exceeds the permissible value, the inverter will come to an alarm stop.	○	○	○
						9999	If a communication error occurs, the inverter will not come to an alarm stop.			
	122		PU communication check time interval	0.1s	9999	0	No PU connector communication	○	○	○
						0.1 to 999.8s	Set the communication check time interval. If a no-communication state persists for longer than the permissible time, the inverter will come to an alarm stop.			
						9999	No communication check			
	123		PU communication waiting time setting	1	9999	0 to 150ms	Set the waiting time between data transmission to the inverter and response.	○	○	○
						9999	Set with communication data.			

勝 特 力 材 料 886-3-5753170
胜特力电子(上海) 86-21-34970699
胜特力电子(深圳) 86-755-83298787
Http://www.100y.com.tw

Function	Parameter	Related parameters	Name	Increments	Initial Value	Range	Description	Parameter copy	Parameter clear	All parameter clear
								○: enabled ×: disabled		
RS-485 communication initial setting	124		PU communication CR/LF presence/ absence selection	1	1	0	Without CR/LF	○	○	○
						1	With CR			
						2	With CR/LF			
		331	RS-485 communication station number	1	0	0 to 31 (0 to 247)	Set the inverter station number. (same specifications as *Pr. 117*) When "1" (Modbus-RTU protocol) is set in *Pr. 551*, the setting range within parenthesis is applied.	○	○	○
		332	RS-485 communication speed	1	96	3, 6, 12, 24, 48, 96, 192, 384	Used to select the communication speed. (same specifications as *Pr. 118*)	○	○	○
		333	RS-485 communication stop bit length	1	1	0, 1, 10, 11	Select stop bit length and data length. (same specifications as *Pr. 119*)	○	○	○
		334	RS-485 communication parity check selection	1	2	0, 1, 2	Select the parity check specifications. (same specifications as *Pr. 120*)	○	○	○
		335	RS-485 communication retry count	1	1	0 to 10, 9999	Set the permissible number of retries at occurrence of a data receive error. (same specifications as *Pr. 121*)	○	○	○
		336	RS-485 communication check time interval	0.1s	0s	0	RS-485 communication can be made, but the inverter will come to an alarm stop in the NET operation mode.	○	○	○
						0.1 to 999.8s	Set the communication check time interval. (same specifications as *Pr. 122*)			
						9999	No communication check			
		337	RS-485 communication waiting time setting	1	9999	0 to 150ms, 9999	Set the waiting time between data transmission to the inverter and response. (same specifications as *Pr. 123*)	○	○	○
		341	RS-485 communication CR/LF selection	1	1	0, 1, 2	Select presence/absence of CR/LF. (same specifications as *Pr. 124*)	○	○	○
		342	Communication EEPROM write selection	1	0	0	Parameter values written by communication are written to the EEPROM and RAM.	○	○	○
						1	Parameter values written by communication are written to the RAM.			
		343	Communication error count	1	0	—	Display the number of communication errors during Modbus-RTU communication. Read only. Displayed only when Modbus-RTU protocol is selected.	×	×	×
		549	Protocol selection	1	0	0	Mitsubishi inverter (computer link) protocol; After setting change, reset (switch power off, then on) the inverter. The setting change is reflected after a reset.	○	○	○
						1	Modbus-RTU protocol			

勝 特 力 材 料 886-3-5753170
胜特力电子(上海) 86-21-34970699
胜特力电子(深圳) 86-755-83298787
Http://www.100y.com.tw

Function	Parameter	Related parameters	Name	Increments	Initial Value	Range	Description	Parameter copy	Parameter clear	All parameter clear
								○: enabled ×: disabled		
Change of analog input frequency, adjustment of voltage, current input and frequency (calibration)	125	◎	Terminal 2 frequency setting gain frequency	0.01Hz	60Hz	0 to 400Hz	Set the frequency of terminal 2 input gain (maximum).	○	×	○
	126	◎	Terminal 4 frequency setting gain frequency	0.01Hz	60Hz	0 to 400Hz	Set the frequency of terminal 4 input gain (maximum). (Valid when *Pr. 858* = 0 (initial value))	○	×	○
		241	Analog input display unit switchover	1	0	0: Displayed in % 1: Displayed in V/mA	Select the unit for analog input display.	○	○	○
		C2 (902)	Terminal 2 frequency setting bias frequency	0.01Hz	0Hz	0 to 400Hz	Set the frequency on the bias side of terminal 2 input.	○	×	○
		C3 (902)	Terminal 2 frequency setting bias	0.1%	0%	0 to 300%	Set the converted % of the bias side voltage (current) of terminal 2 input.	○	×	○
		C4 (903)	Terminal 2 frequency setting gain	0.1%	100%	0 to 300%	Set the converted % of the gain side voltage of terminal 2 input.	○	×	○
		C5 (904)	Terminal 4 frequency setting bias frequency	0.01Hz	0Hz	0 to 400Hz	Set the frequency on the bias side of terminal 4 input. (Valid when *Pr. 858* = 0 (initial value))	○	×	○
		C6 (904)	Terminal 4 frequency setting bias	0.1%	20%	0 to 300%	Set the converted % of the bias side current (voltage) of terminal 4 input. (Valid when *Pr. 858* = 0 (initial value))	○	×	○
		C7 (905)	Terminal 4 frequency setting gain	0.1%	100%	0 to 300%	Set the converted % of the gain side current (voltage) of terminal 4 input. (Valid when *Pr. 858* = 0 (initial value))	○	×	○

The parameter number in parentheses is the one for use with the parameter unit (FR-PU04/FR-PU07).

勝 特 力 材 料 886-3-5753170
胜特力电子(上海) 86-21-34970699
胜特力电子(深圳) 86-755-83298787
Http://www.100y.com.tw

Function	Parameter	Related parameters	Name	Increments	Initial Value	Range	Description		Parameter copy	Parameter clear	All parameter clear
									○: enabled ×: disabled		
PID control	127		PID control automatic switchover frequency	0.01Hz	9999	0 to 400Hz	Set the frequency at which the control is automatically changed to PID control.		○	○	○
						9999	Without PID automatic switchover function				
	128		PID action selection	1	10	10	PID reverse action	Deviation value signal (terminal 1)	○	○	○
						11	PID forward action				
						20	PID reverse action	Measured value input (terminal 4) Set value (terminal 2 or *Pr. 133*)			
						21	PID forward action				
						50	PID reverse action	Deviation value signal input (LONWORKS, CC-Link communication)			
						51	PID forward action				
						60	PID reverse action	Measured value, set value input (LONWORKS, CC-Link communication)			
						61	PID forward action				
	129		PID proportional band	0.1%	100%	0.1 to 1000%	If the proportional band is narrow (parameter setting is small), the manipulated variable varies greatly with a slight change of the measured value. Hence, as the proportional band narrows, the response sensitivity (gain) improves but the stability deteriorates, e.g. hunting occurs. Gain K = 1/proportional band		○	○	○
						9999	No proportional control				
	130		PID integral time	0.1s	1s	0.1 to 3600s	Time required for only the integral (I) action to provide the same manipulated variable as that for the proportional (P) action. As the integral time decreases, the set point is reached earlier but hunting occurs more easily.		○	○	○
						9999	No integral control.				
	131		PID upper limit	0.1%	9999	0 to 100%	Set the upper limit value. If the feedback value exceeds the setting, the FUP signal is output. The maximum input (20mA/5V/10V) of the measured value (terminal 4) is equivalent to 100%.		○	○	○
						9999	No function				
	132		PID lower limit	0.1%	9999	0 to 100%	Set the lower limit value. If the measured value falls below the setting range, the FDN signal is output. The maximum input (20mA/5V/10V) of the measured value (terminal 4) is equivalent to 100%.		○	○	○
						9999	No function				
	133		PID action set point	0.01%	9999	0 to 100%	Used to set the set point for PID control.		○	○	○
						9999	Terminal 2 input voltage is the set point.				
	134		PID differential time	0.01s	9999	0.01 to 10.00s	Time required for only the differential (D) action to provide the same manipulated variable as that for the proportional (P) action. As the differential time increases, greater response is made to a deviation change.		○	○	○
						9999	No differential control.				
		575	Output interruption detection time	0.1s	1s	0 to 3600s	If the output frequency after PID operation remains lower than the *Pr. 576* setting for longer than the time set in *Pr. 575*, the inverter stops operation.		○	○	○
						9999	Without output interruption function				
		576	Output interruption detection level	0.01Hz	0Hz	0 to 400Hz	Set the frequency at which the output interruption processing is performed.		○	○	○
		577	Output interruption cancel level	0.1%	1000%	900 to 1100%	Set the level (*Pr. 577* minus 1000%) to release the PID output interruption function.		○	○	○

勝 特 力 材 料 886-3-5753170
胜特力电子(上海) 86-21-34970699
胜特力电子(深圳) 86-755-83298787
Http://www.100y.com.tw

Function	Parameter	Related parameters	Name	Increments	Initial Value	Range	Description	Parameter copy	Parameter clear	All parameter clear
								○: enabled ×: disabled		
Switch between the inverter operation and commercial power-supply operation to use	135		Commercial power-supply switchover sequence output terminal selection	1	0	0	With commercial power-supply switchover sequence	○	○	○
						1	Without commercial power-supply switchover sequence			
	136		MC switchover interlock time	0.1s	1s	0 to 100s	Set the operation interlock time of MC2 and MC3.	○	○	○
	137		Start waiting time	0.1s	0.5s	0 to 100s	Set the time slightly longer (0.3 to 0.5s or so) than the time from when the ON signal enters MC3 until it actually turns on.	○	○	○
	138		Commercial power-supply operation switchover selection at an alarm	1	0	0	Inverter output is stopped (motor coast) at inverter fault.	○	○	○
						1	Operation is automatically switched to the commercial power-supply operation at inverter fault (Not switched when an external thermal error occurs)			
	139		Automatic switchover frequency between inverter and commercial power-supply operation	0.01Hz	9999	0 to 60Hz	Set the frequency to switch the inverter operation to the commercial power-supply operation.	○	○	○
						9999	Without automatic switchover			
		159	Automatic switchover ON range between commercial power-supply and inverter operation	0.01Hz	9999	0 to 10Hz	Valid during automatic switchover operation (*Pr. 139* ≠ 9999) When the frequency command decreases below (*Pr. 139* - *Pr. 159*) after operation is switched from inverter operation to commercial power-supply operation, the inverter automatically switches operation to the inverter operation and operates at the frequency of frequency command. When the inverter start command (STF/STR) is turned off, operation is switched to the inverter operation also.	○	○	○
						9999	Valid during automatic switchover operation (*Pr. 139* ≠ 9999) When the inverter start command (STF/STR) is turned off after operation is switched from the inverter operation to commercial power-supply inverter operation, operation is switched to the inverter operation and the motor decelerates to stop.			
—	140 to 143		Refer to *Pr. 29*.							
	144		Refer to *Pr. 37*.							
Parameter unit language switchover	145		PU display language selection	1	0	0	Japanese	○	×	×
						1	English			
						2	Germany			
						3	French			
						4	Spanish			
						5	Italian			
						6	Swedish			
						7	Finnish			
—	148,149		Refer to *Pr. 22*.							

勝 特 力 材 料 886-3-5753170
胜特力电子(上海) 86-21-34970699
胜特力电子(深圳) 86-755-83298787
Http://www.100y.com.tw

勝 特 力 材 料 886-3-5753170
胜特力电子(上海) 86-21-34970699
胜特力电子(深圳) 86-755-83298787
Http://www.100y.com.tw

Function	Parameter	Related parameters	Name	Increments	Initial Value	Range	Description	Parameter copy	Parameter clear	All parameter clear
								○: enabled ×: disabled		
Detection of output current (Y12 signal) Detection of zero current (Y13 signal)	150		Output current detection level	0.1%	150%	0 to 220%	Set the output current detection level. 100% is the rated inverter current.	○	○	○
	151		Output current detection signal delay time	0.1s	0s	0 to 10s	Set the output current detection period. Set the time from when the output current has risen above the setting until the output current detection signal (Y12) is output.	○	○	○
	152		Zero current detection level	0.1%	5%	0 to 220%	Set the zero current detection level. Suppose that the rated inverter current is 100%.	○	○	○
	153		Zero current detection time	0.01s	0.5s	0 to 1s	Set this parameter to define the period from when the output current drops below the *Pr. 152* value until the zero current detection signal (Y13) is output.	○	○	○
		166	Output current detection signal retention time	0.1s	0.1s	0 to 10s	Set the retention time when the Y12 signal is on.	○	○	○
						9999	The Y12 signal on status is retained. The signal is turned off at the next start.			
		167	Output current detection operation selection	1	0	0	Operation continues when the Y12 signal is on	○	○	○
						1	The inverter is brought to an alarm stop when the Y12 signal is on. (E.CDO)			
—	154		Refer to *Pr. 22*.							
Condition selection of function validity by the second function selection signal (RT) and third function(X9)	155		RT signal function validity condition selection	1	0	0	Second (third) function is immediately made valid with on of the RT (X9) signal.	○	○	○
						10	Second (third) function is valid only during the RT (X9) signal is on and constant speed operation. (invalid during acceleration/deceleration)			
—	156, 157		Refer to *Pr. 22* .							
	158		Refer to *Pr. 54* .							
	159		Refer to *Pr. 135* .							
User group function	160 ◎		User group read selection	1	0	0	All parameters can be displayed.	○	○	○
						1	Only the parameters registered in the user group can be displayed.			
						9999	Only the simple mode parameters can be displayed.			
		172	User group registered display/ batch clear	1	0	(0 to 16)	Displays the number of cases registered as a user group (reading only).	○	×	×
						9999	Batch clear the user group registration			
		173	User group registration	1	9999	0 to 999, 9999	Set the parameter numbers to be registered to the user group. Read value is always "9999".	×	×	×
		174	User group clear	1	9999	0 to 999, 9999	Set the parameter numbers to be cleared from the user group. Read value is always "9999".	×	×	×
Operation selection of the operation panel	161		Frequency setting/ key lock operation selection	1	0	0	Setting dial frequency setting mode — Key lock mode invalid	○	×	○
						1	Setting dial potentiometer mode — Key lock mode invalid			
						10	Setting dial frequency setting mode — Key lock mode valid			
						11	Setting dial potentiometer mode — Key lock mode valid			
—	162 to 165		Refer to *Pr. 57*.							
	166, 167		Refer to *Pr. 150*.							
	168, 169		Parameter for manufacturer setting. Do not set.							
	170, 171		Refer to *Pr. 52*.							
	172 to 174		Refer to *Pr. 160*.							

Function	Parameter	Related parameters	Name	Increments	Initial Value	Range	Description	Parameter copy	Parameter clear	All parameter clear
								○: enabled ×: disabled		
Function assignment of input terminal	178		STF terminal function selection	1	60	0 to 20, 22 to 28, 42 to 44, 60, 62, 64 to 71, 9999	0: Low-speed operation command 1: Middle-speed operation command 2: High-speed operation command 3: Second function selection 4: Terminal 4 input selection 5: Jog operation selection 6: Selection of automatic restart after instantaneous power failure, flying start 7: External thermal relay input 8: Fifteen speed selection 9: Third function 10: Inverter operation enable signal (FR-HC/MT-HC, FR-CV connection) 11: FR-HC/MT-HC connection, instantaneous power failure detection 12: PU operation external interlock 13: External DC injection brake start 14: PID control valid terminal 15: Brake opening completion signal 16: PU-external operation switchover 17: Load pattern selection forward/reverse rotation boost 18: V/F switch over 19: Load torque high-speed frequency 20: S-pattern acceleration/deceleration C switching terminal 22: Orientation command 23: Pre-excitation 24: Output stop 25: Start self-holding selection 26: Control mode changing 27: Torque limit selection 28: Start time tuning 42: Torque bias selection 1* 43: Torque bias selection 2* 44: P/PI control switchover 60: Forward rotation command (assigned to STF terminal (*Pr. 178*) only) 61: Reverse rotation command (assigned to STR terminal (*Pr. 179*) only) 62: Inverter reset 63: PTC thermistor input (assigned to AU terminal (*Pr. 184*) only) 64: PID forward/reverse action switchover 65: PU-NET operation switchover 66: External-NET operation switchover 67: Command source switchover 68: Conditional position pulse train sign* 69: Conditional position droop pulse clear* 70: DC feeding operation permission 71: DC feeding cancel 9999:No function * Available only when used with the FR-A7AP.	○	×	○
	179		STR terminal function selection	1	61	0 to 20, 22 to 28, 42 to 44, 61, 62, 64 to 71, 9999		○	×	○
	180		RL terminal function selection	1	0	0 to 20, 22 to 28, 42 to 44, 62, 64 to 71, 9999		○	×	○
	181		RM terminal function selection	1	1			○	×	○
	182		RH terminal function selection	1	2			○	×	○
	183		RT terminal function selection	1	3			○	×	○
	184		AU terminal function selection	1	4	0 to 20, 22 to 28, 42 to 44, 62 to 71, 9999		○	×	○
	185		JOG terminal function selection	1	5	0 to 20, 22 to 28, 42 to 44, 62, 64 to 71, 9999		○	×	○
	186		CS terminal function selection	1	6			○	×	○
	187		MRS terminal function selection	1	24			○	×	○
	188		STOP terminal function selection	1	25			○	×	○
	189		RES terminal function selection	1	62			○	×	○

勝 特 力 材 料 886-3-5753170
胜特力电子(上海) 86-21-34970699
胜特力电子(深圳) 86-755-83298787
Http://www.100y.com.tw

Function	Parameter	Related parameters	Name	Increments	Initial Value	Range	Description	Parameter copy	Parameter clear	All parameter clear
								○: enabled ×: disabled		
Terminal assignment of output terminal	190		RUN terminal function selection	1	0	0 to 8, 10 to 20, 25 to 28, 30 to 36, 39, 41 to 47, 64, 70, 84, 85, 90 to 99, 100 to 108, 110 to 116, 120, 125 to 128, 130 to 136, 139, 141 to 147, 164, 170, 190 to 199, 9999	0, 100: Inverter running 1, 101: Up to frequency 2, 102: Instantaneous power failure/ undervoltage 3, 103: Overload alarm 4, 104: Output frequency detection 5, 105: Second output frequency detection 6, 106: Third output frequency detection 7, 107: Regenerative brake pre-alarm 8, 108: Electronic thermal relay function pre-alarm 10, 110:PU operation mode 11, 111: Inverter operation ready 12, 112:Output current detection 13, 113:Zero current detection 14, 114:PID lower limit 15, 115:PID upper limit 16, 116:PID forward/reverse rotation output 17, —: Commercial power-supply switchover MC1 18, —: Commercial power-supply switchover MC2 19, —: Commercial power-supply switchover MC3 20, 120:Brake opening request 25, 125:Fan fault output 26, 126:Heatsink overheat pre-alarm 27, 127:Orientation in-position * 28, 128:Orientation error * 30, 130:Forward rotation output * 31, 131:Reverse rotation output * 32, 132:Regenerative status output * 33, 133:Operation ready 2 34, 134:Low speed output 35, 135:Torque detection 36, 136:In-position * 39, 139:Start time tuning completion 41, 141:Speed detection 42, 142:Second speed detection 43, 143:Third speed detection 44, 144:Inverter running 2 45, 145:Inverter running and start command is on 46, 146:During deceleration at occurrence of power failure (retained until release) 47, 147:During PID control activated 64, 164:During retry 70, 170:PID output interruption 84, 184:PreparatDC current feedingion ready signal * 85, 185:DC current feeding 90, 190:Life alarm 91, 191:Alarm output 3 (power-off signal) 92, 192:Energy saving average value updated timing 93, 193:Current average monitor signal 94, 194:Alarm output 2 95, 195:Maintenance timer signal 96, 196:Remote output 97, 197:Minor fault output 2 98, 198:Minor fault output 99, 199:Alarm output 9999: No function 0 to 99: Positive logic 100 to 199: Negative logic * Available only when used with the FR-A7AP.	○	×	○
	191		SU terminal function selection	1	1			○	×	○
	192		IPF terminal function selection	1	2			○	×	○
	193		OL terminal function selection	1	3			○	×	○
	194		FU terminal function selection	1	4			○	×	○
	195		ABC1 terminal function selection	1	99	0 to 8, 10 to 20, 25 to 28, 30 to 36, 39, 41 to 47, 64, 70, 84, 85, 90, 91, 94 to 99, 100 to 108, 110 to 116, 120, 125 to 128, 130 to 136, 139, 141 to 147, 164, 170, 190, 191, 194 to 199, 9999		○	×	○
	196		ABC2 terminal function selection	1	9999			○	×	○

勝 特 力 材 料 886-3-5753170
胜特力电子(上海) 86-21-34970699
胜特力电子(深圳) 86-755-83298787
Http://www.100y.com.tw

Function	Parameter	Related parameters	Name	Increments	Initial Value	Range	Description		Parameter copy	Parameter clear	All parameter clear
									○: enabled ×: disabled		
—	232 to 239		Refer to *Pr. 4 to Pr. 6*.								
	240		Refer to *Pr. 72*.								
	241		Refer to *Pr. 125 and Pr. 126*.								
	242, 243		Refer to *Pr. 73*.								
Increase cooling fan life	244		Cooling fan operation selection	1	1	0	Operates at power on Cooling fan on/off control invalid (The cooling fan is always on at power on)		○	○	○
						1	Cooling fan on/off control valid The fan is normally on during inverter operation. The fan switches on/off according to the temperature during a stop of the inverter whose status is monitored.				
Slip compensation V/F	245		Rated slip	0.01%	9999	0 to 50%	Used to set the rated motor slip.		○	○	○
						9999	No slip compensation				
	246		Slip compensation time constant	0.01s	0.5s	0.01 to 10s	Used to set the response time of slip compensation. When the value is made smaller, response will be faster. However, as load inertia is greater, a regenerative overvoltage (E.OV□) error is more liable to occur.		○	○	○
	247		Constant-power region slip compensation selection	1	9999	0	Slip compensation is not made in the constant output range (frequency range above the frequency set in *Pr. 3*)		○	○	○
						9999	Slip compensation is made in the constant output range.				
Selection of motor stopping method	250		Stop selection	0.1s	9999	0 to 100s	The motor is coasted to a stop when the preset time elapses after the start signal is turned off.	STF signal: Forward rotation start STR signal: Reverse rotation start	○	○	○
						1000 to 1100s	The motor is coasted to a stop (*Pr. 250* - 1000)s after the start signal is turned off.	STF signal: Start signal STR signal: Forward/reverse signal			
						9999	When the start signal is turned off, the motor decelerates to stop.	STF signal: Forward rotation start STR signal: Reverse rotation start			
						8888		STF signal: Start signal STR signal: Forward/reverse signal			
Input/output phase failure protection selection	251		Output phase failure protection selection	1	1	0	Without output phase failure protection		○	○	○
						1	With output phase failure protection				
		872	Input phase failure protection selection	1	0	0	Without input phase failure protection		○	○	○
						1	With input phase failure protection				
—	252, 253		Refer to *Pr. 73*.								

勝 特 力 材 料 886-3-5753170
胜特力电子(上海) 86-21-34970699
胜特力电子(深圳) 86-755-83298787
Http://www.100y.com.tw

Function	Parameter	Related parameters	Name	Increments	Initial Value	Range	Description	Parameter copy	Parameter clear	All parameter clear
								○: enabled ×: disabled		
Display of the life of the inverter parts	255		Life alarm status display	1	0	(0 to 15)	Display whether the control circuit capacitor, main circuit capacitor, cooling fan, and each parts of the inrush current limit circuit has reached the life alarm output level or not. Reading only	×	×	×
	256		Inrush current limit circuit life display	1%	100%	(0 to 100%)	Display the deterioration degree of the inrush current limit circuit. Reading only	×	×	×
	257		Control circuit capacitor life display	1%	100%	(0 to 100%)	Display the deterioration degree of the control circuit capacitor. Reading only	×	×	×
	258		Main circuit capacitor life display	1%	100%	(0 to 100%)	Display the deterioration degree of the main circuit capacitor. Reading only The value measured by *Pr. 259* is displayed.	×	×	×
	259		Main circuit capacitor life measuring	1	0	0, 1	Setting "1" and turning the power supply off starts the measurement of the main circuit capacitor life. When the *Pr.259* value is "3" after powering on again, the measuring is completed. Read the deterioration degree in *Pr.258*.	○	○	○
Operation at instantaneous power failure	261		Power failure stop selection	1	0	0	Coasting to stop When undervoltage or power failure occurs, the inverter output is shut off.	○	○	○
						1	Without UV avoidance: When undervoltage or a power failure occurs, the inverter can be decelerated to a stop.			
						11	With UV avoidance: When undervoltage or a power failure occurs, the inverter can be decelerated to a stop.			
						2	Without UV avoidance: When undervoltage or a power failure occurs, the inverter can be decelerated to a stop. If power is restored during a power failure, the inverter accelerates again.			
						12	With UV avoidance: When undervoltage or a power failure occurs, the inverter can be decelerated to a stop. If power is restored during a power failure, the inverter accelerates again.			
	262		Subtracted frequency at deceleration start	0.01Hz	3Hz	0 to 20Hz	Normally operation can be performed with the initial value unchanged. But adjust the frequency according to the magnitude of the load specifications (moment of inertia, torque).	○	○	○
	263		Subtraction starting frequency	0.01Hz	60Hz	0 to 120Hz	When output frequency ≥ *Pr. 263* Decelerate from the speed obtained from output frequency minus *Pr. 262*. When output frequency < *Pr. 263* Decelerate from output frequency	○	○	○
						9999	Decelerate from the speed obtained from output frequency minus *Pr. 262*.			
	264		Power-failure deceleration time 1	0.1/ 0.01s	5s	0 to 3600/ 360s	Set a deceleration slope down to the frequency set in *Pr. 266*.	○	○	○
	265		Power-failure deceleration time 2	0.1/ 0.01s	9999	0 to 3600/ 360s	Set a deceleration slope below the frequency set in *Pr. 266*.	○	○	○
						9999	Same slope as in *Pr. 264*			
	266		Power failure deceleration time switchover frequency	0.01Hz	60Hz	0 to 400Hz	Set the frequency at which the deceleration slope is switched from the *Pr. 264* setting to the *Pr. 265* setting.	○	○	○
		294	UV avoidance voltage gain	0.1%	100%	0 to 200%	Adjust response level at UV avoidance operation. A larger setting will improve responsiveness to the bus voltage change. Since the regeneration amount is large when the inertia is large, decrease the setting value.	○	○	○

勝 特 力 材 料 886-3-5753170
胜特力电子(上海) 86-21-34970699
胜特力电子(深圳) 86-755-83298787
Http://www.100y.com.tw

Function	Parameter	Related parameters	Name	Increments	Initial Value	Range	Description	Parameter copy	Parameter clear	All parameter clear
								○: enabled × : disabled		
—	267		Refer to *Pr. 73*.							
	268		Refer to *Pr. 52*.							
	269		Parameter for manufacturer setting. Do not set.							
Load torque high speed frequency control	270		Stop-on contact/ load torque high-speed frequency control selection	1	0	0	Without stop-on contact control and load torque high-speed frequency control	○	○	○
						1	Stop-on contact control			
						2	Load torque high speed frequency control			
						3	Stop-on contact + load torque high speed frequency control			
	271		High-speed setting maximum current	0.1%	50%	0 to 220%	Set the upper and lower limits of the current at high and middle speeds.	○	○	○
	272		Middle-speed setting minimum current	0.1%	100%	0 to 220%		○	○	○
	273		Current averaging range	0.01Hz	9999	0 to 400Hz	Average current during acceleration from (*Pr. 273* × 1/2)Hz to (*Pr. 273*)Hz can be achieved.	○	○	○
						9999	Average current during acceleration from (*Pr. 5* × 1/2)Hz to (*Pr. 5*)Hz is achieved.			
	274		Current averaging filter time constant	1	16	1 to 4000	Set the time constant of the primary delay filter relative to the output current. (The time constant [ms] is 0.75 × *Pr. 274* and the initial value is 12ms.) A larger setting provides higher stability but poorer response.	○	○	○
Stop-on contact control Magnetic flux Sensorless	270		Stop-on contact/ load torque high-speed frequency control selection	1	0	0	Without stop-on contact control and load torque high-speed frequency control	○	○	○
						1	Stop-on contact control			
						2	Load torque high speed frequency control			
						3	Stop-on contact + load torque high speed frequency control			
	275		Stop-on contact excitation current low-speed multiplying factor	0.1%	9999	0 to 1000%	Usually set a value between 130% and 180%. Set the force (holding torque) for stop-on-contact control.	○	○	○
						9999	No compensation.			
	276		PWM carrier frequency at stop-on contact	1	9999	0 to 9/ 0 to 4 *	Set a PWM carrier frequency for stop-on-contact control. (Valid at the output frequency of 3Hz or less.) * The setting range differs according to the inverter capacity. (55K or less/75k or more)	○	○	○
						9999	As set in *Pr. 72 PWM frequency selection*.			

勝 特 力 材 料 886-3-5753170
胜特力电子(上海) 86-21-34970699
胜特力电子(深圳) 86-755-83298787
Http://www.100y.com.tw

Function	Parameter	Related parameters	Name	Increments	Initial Value	Range	Description	Parameter copy	Parameter clear	All parameter clear
								○: enabled ×: disabled		
Brake sequence function (Magnetic flux / Sensorless / Vector)	278		Brake opening frequency	0.01Hz	3Hz	0 to 30Hz	Set to the rated slip frequency of the motor + about 1.0Hz. This parameter may be only set if *Pr. 278* ≤ *Pr. 282*.	○	○	○
	279		Brake opening current	0.1%	130%	0 to 220%	Generally, set this parameter to about 50 to 90%. If the setting is too low, the load is liable to drop due to gravity at start. Suppose that the rated inverter current is 100%.	○	○	○
	280		Brake opening current detection time	0.1s	0.3s	0 to 2s	Generally, set this parameter to about 0.1 to 0.3s.	○	○	○
	281		Brake operation time at start	0.1s	0.3s	0 to 5s	*Pr. 292* = 7: Set the mechanical delay time until the brake is loosened. *Pr. 292* = 8: Set the mechanical delay time until the brake is loosened + about 0.1 to 0.2s.	○	○	○
	282		Brake operation frequency	0.01Hz	6Hz	0 to 30Hz	At this frequency, the brake opening request signal (BOF) is switched off. Generally, set this parameter to the *Pr. 278* setting + 3 to 4Hz. Setting is enabled only when *Pr. 282* ≥ *Pr. 278*.	○	○	○
	283		Brake operation time at stop	0.1s	0.3s	0 to 5s	*Pr. 292* = 7: Set the mechanical delay time until the brake is closed + 0.1s. *Pr. 292* = 8: Set the mechanical delay time until the brake is closed + about 0.2 to 0.3s.	○	○	○
	284		Deceleration detection function selection	1	0	0	Deceleration is not detected.	○	○	○
						1	If deceleration is not normal during deceleration operation, the inverter alarm (E.MB2) is provided to shut off the output and turn off the brake opening request signal (BOF).			
	285		Excessive speed deviation detection frequency	0.01Hz	9999	0 to 30Hz	When brake sequence function is made valid under encoder feedback control If (detected frequency) - (output frequency) > *Pr. 285* under encoder feedback control, the inverter alarm (E.MB1) is provided to shut off the output and turn off the brake opening request signal (BOF).	○	○	○
						9999	Overspeed is not detected.			
		292	Automatic acceleration/ deceleration	1	0	0, 1, 3, 5 to 8, 11	Brake sequence function is made valid when a setting is "7 or 8".			
Speed deviation excess detection (Vector)	285		Speed deviation excess detection frequency	0.01Hz	9999	9999	Without speed deviation excessive	○	○	○
						0 to 30Hz	If the difference (absolute value) between the speed command value and actual speed exceeds the *Pr. 285 Speed deviation excess detection frequency* setting for longer than the time set in *Pr. 853 Speed deviation time* during speed control under vector control, speed deviation excessive occurs and error "E. OSD" appears, resulting in a stop.			
		853	Speed deviation time	0.1s	1s	0 to 100s		○	○	○

勝 特 力 材 料 886-3-5753170
胜特力电子(上海) 86-21-34970699
胜特力电子(深圳) 86-755-83298787
Http://www.100y.com.tw

Function	Parameter	Related parameters	Name	Increments	Initial Value	Range	Description		Parameter copy	Parameter clear	All parameter clear
									O: enabled × : disabled		
Droop control (Magnetic flux / Sensorless / Vector)	286		Droop gain	0.1%	0%	0	Droop control is invalid		○	○	○
						0.1 to 100%	Set the drooping amount at the rated torque as a percentage with respect to the rated frequency.				
	287		Droop filter time constant	0.01s	0.3s	0 to 1s	Set the time constant of the primary delay filter applied to the torque current.		○	○	○
	288		Droop function activation selection	1	0		**Real sensor less vector /vector control**	**Advanced magnetic flux vector control**	○	○	○
						0, 10	Droop control is not exercised during acceleration/ deceleration. (When *Pr.288* = 10, droop compensation amount is determined using the motor speed as reference.)	Droop control is not exercised during acceleration/ deceleration. Droop compensation amount is determined using the rated motor frequency as reference.			
						1, 11	Droop control is always exercised during operation. (with 0 limit) (When *Pr.288* = 11, droop compensation amount is determined using the motor speed as reference.)				
						2	Droop control is always exercised during operation. (without 0 limit)				
Pulse train I/O	291		Pulse train I/O selection	1	0		**Input**	**Output**	○	×	○
						0	JOG terminal	FM output			
						1	Pulse train input	FM output			
						10	JOG terminal	Pulse train open collector output (50% duty)			
						11	Pulse train input				
						20	JOG terminal	Pulse train open collector output (ON width is always same)			
						21	Pulse train input				
						100		Pulse train open collector output (ON width is always same (independently of *Pr. 54*))			
		384	Input pulse division scaling factor	1	0	0 to 250	Indicates division scaling factor to the input pulse and the frequency resolution to the input pulse changes according to the value.		○	○	○
		385	Frequency for zero input pulse	0.01Hz	0	0 to 400Hz	Set the frequency when the input pulse is 0 (bias).		○	○	○
		386	Frequency for maximum input pulse	0.01Hz	60Hz	0 to 400Hz	Set the frequency when the input pulse is maximum (gain).		○	○	○
—	292, 293		Refer to *Pr. 61*.								
—	294		Refer to *Pr. 261*.								
—	299		Refer to *Pr. 57*.								
	331 to 337		Refer to *Pr. 117*.								

勝 特 力 材 料 886-3-5753170
胜特力电子(上海) 86-21-34970699
胜特力电子(深圳) 86-755-83298787
Http://www.100y.com.tw

Function	Parameter	Related parameters	Name	Increments	Initial Value	Range	Description	Parameter copy	Parameter clear	All parameter clear
								○: enabled ×: disabled		
Operation command source and speed command source during communication operation	338		Communication operation command source	1	0	0	Operation command source communication	○	○	○
						1	Operation command source external			
	339		Communication speed command source	1	0	0	Speed command source communication	○	○	○
						1	Speed command source external (Frequency setting from communication is invalid, terminal 2 and 1 setting from external is valid)			
						2	Speed command source external (Frequency setting from communication is valid, terminal 2 and 1 setting from external is invalid)			
		550	NET mode operation command source selection	1	9999	0	Communication option valid	○	○	○
						1	Inverter RS-485 terminal valid			
						9999	Automatic recognition of the communication option Normally, the RS-485 terminals are valid. Communication option is valid when the communication option is mounted.			
		551	PU mode operation command source selection	1	2	1	Select the RS-485 terminals as the PU operation mode control source.	○	○	○
						2	Select the PU connector as the PU operation mode control source.			
						3	Select the USB connector as the PU operation mode control source.			
—	340		Refer to *Pr. 79*.							
	341 to 343		Refer to *Pr. 117*.							
Orientation control (Vector, Magnetic flux, V/F)	350		Stop position command selection	1	9999	0	Internal stop position command *(Pr.356)*	○	○	○
						1	External stop position command (FR-A7AX 16-bit data)			
						9999	Orientation control invalid			
	351		Orientation speed	0.01Hz	2Hz	0 to 30Hz	Decrease the motor speed to the set value when the orientation command (X22) is given.	○	○	○
	352		Creep speed	0.01Hz	0.5Hz	0 to 10Hz	As soon as the current position pulse reaches the creep switchover position set in *Pr.353* after the speed has reached the orientation speed, the speed decelerates down to the creep speed set in *Pr.352*.	○	○	○
	353		Creep switchover position	1	511	0 to 16383		○	○	○
	354		Position loop switchover position	1	96	0 to 8191	As soon as the current position pulse reaches the set position loop switchover position, control is changed to position loop.	○	○	○
	355		DC injection brake start position	1	5	0 to 255	After changed to position loop, DC injection brake is applied and the motor stops as soon as the current position pulse reaches the set DC injection brake start position.	○	○	○
	356		Internal stop position command	1	0	0 to 16383	When "0" is set in *Pr. 350*, the internal position command is activated and the setting value of *Pr. 356* becomes a stop position.	○	○	○
	357		In-position zone	1	5	0 to 255	Set the in-position zone at a stop of the orientation.	○	○	○
	358		Servo torque selection	1	1	0 to 13	Functions at orientation completion can be selected.	○	○	○
	359		Encoder rotation direction	1	1	0	Clockwise direction as viewed from A is forward rotation	○	○	○
						1	Clockwise direction as viewed from A is forward rotation			

勝 特 力 材 料 886-3-5753170
胜特力电子(上海) 86-21-34970699
胜特力电子(深圳) 86-755-83298787
Http://www.100y.com.tw

勝 特 力 材 料 886-3-5753170
胜特力电子(上海) 86-21-34970699
胜特力电子(深圳) 86-755-83298787
Http://www.100y.com.tw

Function	Parameter	Related parameters	Name	Increments	Initial Value	Range	Description	Parameter copy	Parameter clear	All parameter clear
								○: enabled ×: disabled		
Orientation control (V/F, Magnetic flux, Vector)	360		16 bit data selection	1	0	0	Speed command. When 1 is set in *Pr.350* and the option FR-A7AX is mounted, set a stop position using 16-bit data. Stop position command is input as binary regardless of the *Pr.304* setting.	○	○	○
						1	Position command 16 bit data is used as external position command as is.			
						2 to 127	Set the stop position dividing up to 128 stop positions at regular intervals.			
	361		Position shift	1	0	0 to 16383	Shift the origin using a compensation value without changing the origin of the encoder. The stop position is a position obtained by adding the setting value of *Pr. 361* to the position command.	○	○	○
	362		Orientation position loop gain	0.1	1	0.1 to 10	When servo torque function is selected using *Pr.358*, output frequency for generating servo torque increases to the creep speed of *Pr.352* gradually according to the slope set in *Pr.362*. Although the operation becomes faster when the value is increased, a machine may hunt, etc.	○	○	○
	363		Completion signal output delay time	0.1s	0.5s	0 to 5s	The orientation complete signal (ORA) is output delaying the set time after in-position zone is entered. Also, the signal turns off delaying the set time after in-position zone is out.	○	○	○
	364		Encoder stop check time	0.1s	0.5s	0 to 5s	Orientation fault signal (ORM) is output when the encoder remains stopped for the set time without orientation completion in the state where no orientation complete signal (ORA) is output. ORM signal is output when orientation is not completed again in the set time in the state where ORA signal is output.	○	○	○
	365		Orientation limit	1s	9999	0 to 60s	Measure the time taken after passing the creep switchover position and output the orientation fault signal (ORM) if orientation is not completed within the set time.	○	○	○
						9999	Set to 120s.			
	366		Recheck time	0.1s	9999	0 to 5s	Turning off the start signal with orientation command (X22) on after stopping the motor by orientation control, the present position is checked again after the set time elapses and the orientation complete signal (ORA) or orientation fault signal (ORM) is output.	○	○	○
						9999	Not checked.			
		369	Number of encoder pulses	1	1024	0 to 4096	Set the number of pulses of the encoder. Set the number of pulses before multiplied by four.	○	○	○
		393	Orientation selection	1	0	0	Orientation is executed from the current rotation direction.	○	○	○
						1	Orientation is executed from the forward rotation direction.			
						2	Orientation is executed from the reverse rotation direction.			
		396	Orientation speed gain (P term)	1	60	0 to 1000	Servo rigidity is (response level during position control loop) at orientation stop can be adjusted.	○	○	○
		397	Orientation speed integral time	0.001s	0.333s	0 to 20.0s		○	○	○
		398	Orientation speed gain (D term)	0.1%	1%	0 to 100.0%	Lag/advance compensation gain can be adjusted.	○	○	○
		399	Orientation deceleration ratio	1	20	0 to 1000	Make adjustment when the motor runs back at orientation stop or the orientation time is long.	○	○	○

勝 特 力 材 料 886-3-5753170
胜特力电子(上海) 86-21-34970699
胜特力电子(深圳) 86-755-83298787
Http://www.100y.com.tw

Function	Parameter	Related parameters	Name	Increments	Initial Value	Range	Description	Parameter copy	Parameter clear	All parameter clear
								O: enabled × : disabled		
Encoder feedback control (Magnetic flux / V/F)	359		Encoder rotation direction	1	1	0	Clockwise direction as viewed from A is forward rotation	O	O	O
						1	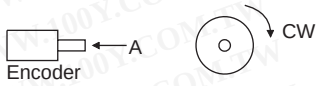 Clockwise direction as viewed from A is forward rotation			
	367		Speed feedback range	0.01Hz	9999	0 to 400Hz	Set the region of speed feedback control.	O	O	O
						9999	Encoder feedback control is invalid			
	368		Feedback gain	0.1	1	0 to 100	Set when the rotation is unstable or response is slow.	O	O	O
	369		Number of encoder pulses	1	1024	0 to 4096	Set the number of pulses of the encoder. Set the number of pulses before multiplied by four.	O	O	O
Overspeed detection	374		Overspeed detection level	0.01Hz	140Hz	0 to 400Hz	When the motor speed reaches or exceeds the speed set in *Pr.374* during encoder feedback control, real sensorless vector control, or vector control, over speed (E.OS) occurs and stops the inverter output.	O	O	O
Encoder signal cable breakage detection (Vector / Magnetic flux / V/F)	376		Open cable detection enable/disable selection	1	0	0	Signal loss detection is invalid	O	O	O
						1	Signal loss detection is valid When the cable of the encoder signal is broken during encoder feedback control, orientation control, or vector control, signal loss detection (E.ECT) is activated to stop the inverter output.			
—	380 to 383		Refer to *Pr. 29*.							
	384 to 386		Refer to *Pr. 291*.							
Position control (Vector)	419		Position command source selection	1	0	0	Conditional position control function by contact input	O	O	O
						2	Conditional position pulse train command by pulse train input from the JOG terminal			
	420		Command pulse scaling factor numerator	1	1	0 to 32767	Set the electronic gear. *Pr. 420* is a numerator and *Pr. 421* is a denominator.	O	O	O
	421		Command pulse scaling factor denominator	1	1	0 to 32767		O	O	O
	422		Position loop gain	$1s^{-1}$	$25s^{-1}$	0 to $150s^{-1}$	Set the gain of the position loop.	O	O	O
	423		Position feed forward gain	1%	0%	0 to 100%	Function to cancel a delay caused by the droop pulses of the deviation counter.	O	O	O
	424		Position command acceleration/deceleration time constant	0.001s	0s	0 to 50s	Used when rotation has become unsmooth at a large electronic gear ratio (about 10 times or more) and low speed.	O	O	O
	425		Position feed forward command filter	0.001s	0s	0 to 5s	Enters the primary delay filter in response to the feed forward command.	O	O	O

勝 特 力 材 料 886-3-5753170
胜特力电子(上海) 86-21-34970699
胜特力电子(深圳) 86-755-83298787
Http://www.100y.com.tw

Function	Parameter	Related parameters	Name	Increments	Initial Value	Range	Description		Parameter copy	Parameter clear	All parameter clear
									○: enabled ×: disabled		
Position control Vector	426		In-position width	1 pulse	100 pulse	0 to 32767 pulse	The in-position signal (Y36) turns on when the droop pulses become less than the setting.		○	○	○
	427		Excessive level error	1	40	0 to 400	A position error excessive (E.OD) occurs when the droop pulses exceed the setting.		○	○	○
						9999	Function invalid				
	428		Command pulse selection	1	0	0 to 2	Pulse train + sign	Negative logic	○	○	○
						3 to 5	Pulse train + sign	Positive logic			
	429		Clear signal selection	1	1	0	Deviation counter is cleared at trailing edge (at the moment when H level is changed to L level)		○	○	○
						1	eviation counter is cleared at L level				
	430		Pulse monitor selection	1	9999		Description	FR-DU07(FR-PU04) display	○	○	○
						0	The cumulative command pulse value is displayed.	Lower 4(5) digits			
						1		Upper 4(5) digits			
						2	The cumulative feedback pulse value is displayed.	Lower 4(5) digits			
						3		Upper 4(5) digits			
						4	The droop pulses are monitored.	Lower 4(5) digits			
						5		Upper 4(5) digits			
						9999	Frequency monitor is displayed.				
		464	Digital position control sudden stop deceleration time	0.1s	0	0 to 360.0s	Set the time until the inverter stops when the forward rotation (reverse rotation) command is turned off with the position feed forward function.		○	○	○
—	450		Refer to *Pr. 71*.								
	451		Refer to *Pr. 80*.								
	453, 454		Refer to *Pr. 80*.								
	455 to 463		Refer to *Pr. 82*.								
Conditional position feed function Vector							Selection Method	Position Feed Speed			
	465		First position feed amount lower 4 digits	1	0	0 to 9999	RH	High speed *(Pr.4)*	○	○	○
	466		First position feed amount upper 4 digits	1	0	0 to 9999			○	○	○
	467		Second position feed amount lower 4 digits	1	0	0 to 9999	RM	Middle speed *(Pr.5)*	○	○	○
	468		Second position feed amount upper 4 digits	1	0	0 to 9999			○	○	○
	469		Third position feed amount lower 4 digits	1	0	0 to 9999	RL	Low speed *(Pr.6)*	○	○	○
	470		Third position feed amount upper 4 digits	1	0	0 to 9999			○	○	○
	471		Fourth position feed amount lower 4 digits	1	0	0 to 9999	RM, RL	Speed 4 *(Pr.24)*	○	○	○
	472		Fourth position feed amount upper 4 digits	1	0	0 to 9999			○	○	○
	473		Fifth position feed amount lower 4 digits	1	0	0 to 9999	RH, RL	Speed 5 *(Pr.25)*	○	○	○
	474		Fifth position feed amount upper 4 digits	1	0	0 to 9999			○	○	○
	475		Sixth position feed amount lower 4 digits	1	0	0 to 9999	RH, RM	Speed 6 *(Pr.26)*	○	○	○
	476		Sixth position feed amount upper 4 digits	1	0	0 to 9999			○	○	○
	477		Seventh position feed amount lower 4 digits	1	0	0 to 9999	RH, RM, RL	Speed 7 *(Pr.27)*	○	○	○
	478		Seventh position feed amount upper 4 digits	1	0	0 to 9999			○	○	○

勝 特 力 材 料 886-3-5753170
胜特力电子(上海) 86-21-34970699
胜特力电子(深圳) 86-755-83298787
Http://www.100y.com.tw

Function	Parameter	Related parameters	Name	Increments	Initial Value	Range	Description		Parameter copy	Parameter clear	All parameter clear
									○: enabled ×: disabled		
Conditional position feed function Vector	479		Eighth position feed amount lower 4 digits	1	0	0 to 9999	REX	Speed 8 *(Pr.232)*	○	○	○
	480		Eighth position feed amount upper 4 digits	1	0	0 to 9999			○	○	○
	481		Ninth position feed amount lower 4 digits	1	0	0 to 9999	REX, RL	Speed 9 *(Pr.233)*	○	○	○
	482		Ninth position feed amount upper 4 digits	1	0	0 to 9999			○	○	○
	483		Tenth position feed amount lower 4 digits	1	0	0 to 9999	REX, RM	Speed 10 *(Pr.234)*	○	○	○
	484		Tenth position feed amount upper 4 digits	1	0	0 to 9999			○	○	○
	485		Eleventh position feed amount lower 4 digits	1	0	0 to 9999	REX, RM, RL	Speed 11 *(Pr.235)*	○	○	○
	486		Eleventh position feed amount upper 4 digits	1	0	0 to 9999			○	○	○
	487		Twelfth position feed amount lower 4 digits	1	0	0 to 9999	REX, RH	Speed 12 *(Pr.236)*	○	○	○
	488		Twelfth position feed amount upper 4 digits	1	0	0 to 9999			○	○	○
	489		Thirteenth position feed amount lower 4 digits	1	0	0 to 9999	REX, RH, RL	Speed 13 *(Pr.237)*	○	○	○
	490		Thirteenth position feed amount upper 4 digits	1	0	0 to 9999			○	○	○
	491		Fourteenth position feed amount lower 4 digits	1	0	0 to 9999	REX, RH, RM	Speed 14 *(Pr.238)*	○	○	○
	492		Fourteenth position feed amount upper 4 digits	1	0	0 to 9999			○	○	○
	493		Fifteenth position feed amount lower 4 digits	1	0	0 to 9999	REX, RH, RM, RL	Speed 15 *(Pr.239)*	○	○	○
	494		Fifteenth position feed amount upper 4 digits	1	0	0 to 9999			○	○	○
Remote output function (REM signal)	495		Remote output selection	1	0	0	Remote output data clear at powering off		○	○	○
						1	Remote output data retention even at powering off				
	496		Remote output data 1	1	0	0 to 4095	Output terminal can be switched on and off.		×	×	×
	497		Remote output data 2	1	0	0 to 4095			×	×	×
Maintenance of parts	503		Maintenance timer	1	0	0 (1 to 9998)	Display the cumulative energization time of the inverter in 100h increments. Reading only Writing the setting of "0" clears the cumulative energization time.		×	×	×
	504		Maintenance timer alarm output set time	1	9999	0 to 9998	Set the time taken until when the maintenance timer alarm output signal (Y95) is output.		○	×	○
						9999	No function				
—	505		Refer to *Pr. 37*.								
—	516 to 519		Refer to *Pr. 29*.								
Inverter setup using USB communication	547		USB communication station number	1	0	0 to 31	Specify the inverter station number.		○	○	○
	548		USB communication check time interval	0.1s	9999	0	USB communication is enabled. However, the inverter will come to an alarm stop (E. USB) if operation is changed to PU operation mode.		○	○	○
						0.1 to 999.8s	Set the interval of communication check time.				
						9999	No communication check				
		551	Refer to *Pr. 338 and Pr. 339*.								
—	549		Refer to *Pr. 117*.								
	550, 551		Refer to *Pr. 338 and Pr. 339*.								

Function	Parameter	Related parameters	Name	Increments	Initial Value	Range	Description	Parameter copy	Parameter clear	All parameter clear
								○: enabled ×: disabled		
Current average value monitor signal	555		Current average time	0.1s	1s	0.1 to 1.0s	Set the time taken to average the current during start bit output (1s).	○	○	○
	556		Data output mask time	0.1s	0s	0.0 to 20.0s	Set the time for not obtaining (mask) transient state data.	○	○	○
	557		Current average value monitor signal output reference current	0.01/ 0.1A *	Rated inverter current	0 to 500/ 0 to 3600A *	Set the reference (100%) for outputting the signal of the current average value. * The increments and setting range differ according to the inverter capacity. (55K or less/75k or more)	○	○	○
—	563, 564		Refer to *Pr. 52*.							
	569		Refer to *Pr. 80*.							
	571		Refer to *Pr. 13*.							
	574		Refer to *Pr. 95*.							
	575 to 577		Refer to *Pr. 127*.							
	611		Refer to *Pr. 57*.							
	665		Refer to *Pr. 882*.							
	684		Refer to *Pr. 82*.							
	800		Refer to *Pr. 81*.							
	802		Refer to *Pr. 10*.							
	803		Refer to *Pr. 22*.							
Torque command source selection Vector Sensorless	804		Torque command source selection	1	0	0	Torque command by terminal 1 analog input	○	○	○
						1	Torque command by parameter *Pr.805* or *Pr.806* setting (-400% to 400%)			
						3	Torque command by using CC-Link (FR-A7NC)			
						4	Digital input from the option (FR-A7AX)			
						5	Torque command by using CC-Link (FR-A7NC)			
						6				
	805		Torque command value (RAM)	1%	1000%	600 to 1400%	Digital setting of the torque command can be made by setting *Pr. 805* or *Pr. 806*. (Setting from communication option, etc. can be made.) In this case, set the speed limit value to an appropriate value to prevent overspeed.	×	○	○
	806		Torque command value (RAM,EEPROM)	1%	1000%	600 to 1400%		○	○	○
Speed limit Vector Sensorless	807		Speed limit selection	1	0	0	Use the speed command value during speed control as speed limit.	○	○	○
						1	According to *Pr. 808* and *Pr. 809*, set the speed limit in forward and reverse rotation directions individually.			
						2	The analog voltage of the terminal 1 input is used to make speed limit. For 0 to 10V input, set the forward rotation speed limit. (The reverse rotation speed limit is *Pr. 1 Maximum frequency*) For -10 to 0V input, set the reverse rotation speed limit. (The forward rotation speed limit is *Pr. 1 Maximum frequency*.) The maximum frequency of both the forward and reverse rotations is *Pr. 1 Maximum frequency*.			
	808		Forward rotation speed limit	0.01Hz	60Hz	0 to 120Hz	Set the speed limit level during forward rotation. (valid when *Pr. 807* = 1)	○	○	○
	809		Reverse rotation speed limit	0.01Hz	9999	0 to 120Hz	Set the speed limit level during reverse rotation. (valid when *Pr. 807* = 1)	○	○	○
						9999	The setting is the same as that of the torque limit in the forward rotation direction.			
—	810		Refer to *Pr. 22*.							
—	811		Refer to *Pr. 22* and *Pr. 37*.							
—	812 to 817		Refer to *Pr. 22*.							

勝 特 力 材 料 886-3-5753170
胜特力电子(上海) 86-21-34970699
胜特力电子(深圳) 86-755-83298787
Http://www.100y.com.tw

勝 特 力 材 料 886-3-5753170
胜特力电子(上海) 86-21-34970699
胜特力电子(深圳) 86-755-83298787
Http://www.100y.com.tw

Function	Parameter	Related parameters	Name	Increments	Initial Value	Range	Description	Parameter copy	Parameter clear	All parameter clear
								○: enabled ×: disabled		
Easy gain tuning selection Vector Sensorless	818		Easy gain tuning response level setting	1	2	1 to 15	1 : Slow response ↓ 15 : Fast response	○	○	○
	819		Easy gain tuning selection	1	0	0	No tuning	○	×	○
						1	With load estimation (only under vector control)			
						2	The optimum gain is automatically set from the torque command and speed during motor operation. Manual input of load (*Pr. 880*)			
Speed loop proportional gain setting Vector Sensorless	820		Speed control P gain 1	1%	60%	0 to 1000%	Set the proportional gain for speed control. (Increasing the value improves trackability in response to a speed command change and reduces speed variation with disturbance.)	○	○	○
		830	Speed control P gain 2	1%	9999	0 to 1000%	Second function of *Pr. 820* (valid when RT signal is on)	○	○	○
						9999	No function			
Speed control integral time setting Vector Sensorless	821		Speed control integral time 1	0.001s	0.333s	0 to 20s	Set the integral time during speed control. (Decrease the value to shorten the time taken for returning to the original speed if speed variation with disturbance occurs.)	○	○	○
		831	Speed control integral time 2	0.001s	9999	0 to 20s	Second function of *Pr. 821* (valid when the RT terminal is on)	○	○	○
						9999	No function			
—	822		Refer to *Pr. 74*.							
Speed detection filter function Vector	823		Speed detection filter 1	0.001s	0.001s	0 to 0.1s	Set the primary delay filter for the speed feedback.	○	○	○
		833	Speed detection filter 2	0.001s	9999	0 to 0.1s	Second function of *Pr. 823* (valid when RT signal is on)	○	○	○
						9999	No function	○	○	○
Current loop proportional gain setting Vector Sensorless	824		Torque control P gain 1	1%	100%	0 to 200%	Set the proportional gain for the current control of the q and d axes. (Increasing the value improves trackability in response to a current command change and reduces current variation with disturbance.)	○	○	○
		834	Torque control P gain 2	1%	9999	0 to 200%	Second function of *Pr. 824* (valid when the RT terminal is on)	○	○	○
						9999	No function			
Current control integral time setting Vector Sensorless	825		Torque control integral time 1	0.1ms	5ms	0 to 500ms	Set the integral time for the current control of the q and d axes. (Decreasing the value shortens the time taken to return to the original torque if current variation with disturbance occurs.)	○	○	○
		835	Torque control integral time 2	0.1ms	9999	0 to 500ms	Second function of *Pr. 825* (valid when the RT signal is on)	○	○	○
						9999	No function			
—	826		Refer to *Pr. 74*.							
Torque detection filter function Vector Sensorless	827		Torque detection filter 1	0.001s	0s	0 to 0.1s	Set the primary delay filter for the current feedback.	○	○	○
		837	Torque detection filter 2	0.001s	9999	0 to 0.1s	Second function of *Pr. 827* (valid when the RT signal is on)	○	○	○
						9999	No function			

勝 特 力 材 料 886-3-5753170
胜特力电子(上海) 86-21-34970699
胜特力电子(深圳) 86-755-83298787
Http://www.100y.com.tw

Function	Parameter	Related parameters	Name	Increments	Initial Value	Range	Description	Parameter copy	Parameter clear	All parameter clear
								O: enabled × : disabled		
Speed feed forward control, model adaptive speed control (Vector / Sensorless)	828		Model speed control gain	1%	60%	0 to 1000%	Set the gain for model speed controller.	○	○	○
		877	Speed feed forward control/model adaptive speed control selection	1	0	0	Normal speed control is exercised	○	○	○
						1	Speed feed forward control is exercised.			
						2	Model adaptive speed control is enabled.			
		878	Speed feed forward filter	0.01s	0s	0 to 1s	Set the primary delay filter for the speed feed forward result calculated using the speed command and load inertia ratio.	○	○	○
		879	Speed feed forward torque limit	0.1%	150%	0 to 400%	Limits the maximum value of the speed feed forward torque.	○	○	○
		880	Load inertia ratio	0.1	7	0 to 200 times	Set the load inertia ratio. Inertia ratio found by easy gain turning.	○	×	○
		881	Speed feed forward gain	1%	0%	0 to 1000%	Set the feed forward calculation result as a gain.	○	○	○
—	830		Refer to *Pr. 820*.							
	831		Refer to *Pr. 821*.							
	832		Refer to *Pr. 74*.							
	833		Refer to *Pr. 823*.							
	834		Refer to *Pr. 824*.							
	835		Refer to *Pr. 825*.							
	836		Refer to *Pr. 74*.							
	837		Refer to *Pr. 827*.							
Torque bias function (Vector)	840		Torque bias selection	1	9999	0	Set the contact signal (X42, X43) based-torque bias amount using *Pr.841* to *Pr.843*.	○	○	○
						1	Set the terminal 1-based torque bias amount as desired in *C16* to *C19*. (forward rotation)			
						2	Set the terminal 1-based torque bias amount as desired in *C16* to *C19*. (reverse rotation)			
						3	The terminal 1-based torque bias amount can be set automatically in *C16* to *C19*, *Pr.846* according to the load.			
						9999	Without torque bias, rated torque 100%			
	841		Torque bias 1	1%	9999	600 to 999%	Negative torque bias amount (-400% to -1%)	○	○	○
	842		Torque bias 2			1000 to 1400%	Positive torque bias amount (0% to 400%)			
	843		Torque bias 3			9999	Without torque bias setting			
	844		Torque bias filter	0.001s	9999	0 to 5s	Time until torque rises.	○	○	○
						9999	Same operation as when 0s is set.			
	845		Torque bias operation time	0.01s	9999	0 to 5s	Time for maintaining torque equivalent to the torque bias amount.	○	○	○
						9999	Same operation as when 0s is set.			
	846		Torque bias balance compensation	0.1V	9999	0 to 10V	Set the voltage under balanced load.	○	○	○
						9999	Same operation as when 0V is set.			
	847		Fall-time torque bias terminal 1 bias	1%	9999	0 to 400%	Set the bias value of the torque command.	○	○	○
						9999	Same as at a rise time (*C16*, *C17*).			
	848		Fall-time torque bias terminal 1 gain	1%	9999	0 to 400%	Set the gain value of the torque command.	○	○	○
						9999	Same as at a rise time (*C18*, *C19*).			
—	849		Refer to *Pr. 74*.							
	850		Refer to *Pr. 10*.							
	853		Refer to *Pr. 285*.							
Excitation ratio (Vector / Sensorless)	854		Excitation ratio	1%	100%	0 to 100%	Set the excitation ratio under no load.	○	○	○

Function	Parameter	Related parameters	Name	Increments	Initial Value	Range	Description	Parameter copy	Parameter clear	All parameter clear
								○: enabled ×: disabled		
Function assignment of analog input terminal	858		Terminal 4 function assignment	1	0	0	Frequency/speed command	○	×	○
						1	Magnetic flux command			
						4	Stall prevention/torque limit			
						9999	No function			
		868	Terminal 1 function assignment	1	0	0	Frequency setting auxiliary	○	×	○
						1	Magnetic flux command			
						2	Regenerative torque limit			
						3	Torque command			
						4	Stall prevention/torque limit/torque command			
						5	Forward/reverse rotation speed limit			
						6	Torque bias			
						9999	No function			
—	859 to 860		Refer to *Pr. 82*.							
Notch filter Vector Sensorless	862		Notch filter time constant	1	0	0 to 60	You can use the machine resonance speed to make this setting to reduce the response level of the machine resonance frequency band, avoiding machine resonance.	○	○	○
	863		Notch filter depth	1	0	0	Deep (-40dB)	○	○	○
						1	↑ (-14dB)			
						2	↓ (-8dB)			
						3	Sharrow (-4dB)			
Torque detection Vector Sensorless	864		Torque detection	0.1%	150%	0 to 400%	You can make setting to output a signal if the motor torque exceeds the predetermined value.	○	○	○
—	865		Refer to *Pr. 41*.							
	866		Refer to *Pr. 55*.							
	867		Refer to *Pr. 52*.							
	868		Refer to *Pr. 858*.							
—	872		Refer to *Pr. 251*.							
Speed limit during speed control Vector	873		Speed limit	0.01Hz	20Hz	0 to 120Hz	Frequency is limited at the set frequency + *Pr.873* during vector control.	○	○	○
—	874		Refer to *Pr. 22*.							
Fault definition	875		Fault definition	1	0	0	At occurrence of any alarm, the base circuit is shut off immediately. At this time, the alarm output also turns on.	○	○	○
						1	At occurrence of external thermal operation (OHT), electronic thermal relay function (THM) or PTC thermistor operation (PTC) alarm, the motor is decelerated to a stop and the base circuit is shut off. At occurrence of an alarm other than OHT, THM and PTC, the base circuit is shut off immediately. Same operation as when "0" is set is performed under position control.			
—	877 to 881		Refer to *Pr. 828*.							

勝 特 力 材 料 886-3-5753170
胜特力电子(上海) 86-21-34970699
胜特力电子(深圳) 86-755-83298787
Http://www.100y.com.tw

Function	Parameter	Related parameters	Name	Increments	Initial Value	Range	Description	Parameter copy	Parameter clear	All parameter clear
								○: enabled × : disabled		
Regeneration avoidance function	882		Regeneration avoidance operation selection	1	0	0	Regeneration avoidance function invalid	○	○	○
						1	Regeneration avoidance function is always valid			
						2	Regeneration avoidance function is valid only at constant speed			
	883		Regeneration avoidance operation level	0.1V	380 / 760VDC *	300 to 800V	Set the bus voltage level at which regeneration avoidance operates. When the bus voltage level is set to low, overvoltage error will be less apt to occur. However, the actual deceleration time increases. The set value must be higher than the power supply voltage × $\sqrt{2}$ * The initial value differs according to the voltage level. (200V class / 400V class)	○	○	○
	884		Regeneration avoidance at deceleration detection sensitivity	1	0	0	Regeneration avoidance by bus voltage change ratio is invalid	○	○	○
						1 to 5	Set sensitivity to detect the bus voltage change. Setting: 1 → 5 Detection sensitivity: Low → High			
	885		Regeneration avoidance compensation frequency limit value	0.01Hz	6Hz	0 to 10Hz	Set the limit value of frequency which rises at activation of regeneration avoidance function.	○	○	○
						9999	Frequency limit invalid			
	886		Regeneration avoidance voltage gain	0.1%	100%	0 to 200%	Adjust responsiveness at activation of regeneration avoidance. Setting a larger value in *Pr.886* will improve responsiveness to the bus voltage change. However, the output frequency could become unstable. When the load inertia of the motor is large, decrease the *Pr. 886* setting. When vibration is not suppressed by decreasing the *Pr.886* setting, set a smaller value in *Pr.665*.	○	○	○
		665	Regeneration avoidance frequency gain	0.1%	100%	0 to 200%		○	○	○
Free parameter	888		Free parameter 1	1	9999	0 to 9999	Parameters you can use for your own purposes. Used for maintenance, management, etc. by setting a unique number to each inverter when multiple inverters are used.	○	×	×
	889		Free parameter 2	1	9999	0 to 9999		○	×	×
—	891		Refer to *Pr. 52*.							

勝 特 力 材 料 886-3-5753170
胜特力电子(上海) 86-21-34970699
胜特力电子(深圳) 86-755-83298787
Http://www.100y.com.tw

Function	Parameter	Related parameters	Name	Increments	Initial Value	Range	Description	Parameter copy	Parameter clear	All parameter clear
								○: enabled ×: disabled		
Energy saving monitor	892		Load factor	0.1%	100%	30 to 150%	Set the load factor for commercial power-supply operation. This value is used to calculate the power consumption estimated value during commercial power supply operation.	○	○	○
	893		Energy saving monitor reference (motor capacity)	0.01/ 0.1kW *	Inverter rated capacity	0.1 to 55/ 0 to 3600kW *	Set the motor capacity (pump capacity). Set when calculating power saving rate and average power saving rate value. * The increments and setting range differ according to the inverter capacity. (55K or less/75k or more)	○	○	○
	894		Control selection during commercial power-supply operation	1	0	0	Discharge damper control (fan)	○	○	○
						1	Inlet damper control (fan)			
						2	Valve control (pump)			
						3	Commercial power-supply drive (fixed value)			
	895		Power saving rate reference value	1	9999	0	Consider the value during commercial power-supply operation as 100%	○	○	○
						1	Consider the *Pr. 893* setting as 100%.			
						9999	No function			
	896		Power unit cost	0.01	9999	0 to 500	Set the power unit cost. Display the power saving rate on the energy saving monitor	○	○	○
						9999	No function			
	897		Power saving monitor average time	1	9999	0	Average for 30 minutes	○	○	○
						1 to 1000h	Average for the set time			
						9999	No function			
	898		Power saving cumulative monitor clear	1	9999	0	Cumulative monitor value clear	○	×	○
						1	Cumulative monitor value hold			
						10	Cumulative monitor continue (communication data upper limit 9999)			
						9999	Cumulative monitor continue (communication data upper limit 65535)			
	899		Operation time rate (estimated value)	0.1%	9999	0 to 100%	Use for calculation of annual power saving amount. Set the annual operation ratio (consider 365 days × 24hr as 100%).	○	○	○
						9999	No function			
Adjustment of terminal FM and AM (calibration)	C0 (900)		FM terminal calibration	–	–	–	Calibrate the scale of the meter connected to terminal FM. (Only when *Pr. 291* = 0, 1)	○	×	○
	C1 (901)		AM terminal calibration	–	–	–	Calibrate the scale of the analog meter connected to terminal AM.	○	×	○
—	C2(902) to C7(905)		Refer to *Pr. 125 and Pr. 126*.							

勝 特 力 材 料 886-3-5753170
胜特力电子(上海) 86-21-34970699
胜特力电子(深圳) 86-755-83298787
Http://www.100y.com.tw

Function	Parameter	Related parameters	Name	Increments	Initial Value	Range	Description	Parameter copy	Parameter clear	All parameter clear
								○: enabled × : disabled		
Adjustment of analog input torque magnetic flux command (calibration)	C12 (917)		Terminal 1 bias frequency (speed)	0.01Hz	0Hz	0 to 400Hz	Set the frequency on the bias side of terminal 1 input. (valid when *Pr.868* = 5)	○	×	○
	C13 (917)		Terminal 1 bias (speed)	0.1%	0%	0 to 300%	Set the converted % of the bias side voltage (current) of terminal 1 input. (valid when *Pr.868* = 5)	○	×	○
	C14 (918)		Terminal 1 gain frequency (speed)	0.01Hz	60Hz	0 to 400Hz	Set the frequency of terminal 1 input gain (maximum). (valid when *Pr.868* = 5)	○	×	○
	C15 (918)		Terminal 1 gain (speed)	0.1%	100%	0 to 300%	Set the converted % of the gain side voltage (current) of terminal 1 input. (valid when *Pr.868* = 5)	○	×	○
	C16 (919)		Terminal 1 bias command (torque/ magnetic flux)	0.1%	0%	0 to 400%	Set the torque/magnetic flux command value on the bias side of terminal 1 input. (valid when *Pr. 868* ≠ 0, 5)	○	×	○
	C17 (919)		Terminal 1 bias (torque/magnetic flux)	0.1%	0%	0 to 300%	Set the converted % of the bias side voltage (current) of terminal 1 input. (valid when *Pr. 868* ≠ 0, 5)	○	×	○
	C18 (920)		Terminal 1 gain command (torque/ magnetic flux)	0.1%	150%	0 to 400%	Set the torque/magnetic flux command value on the gain side of terminal 1 input. (valid when *Pr. 868* ≠ 0, 5)	○	×	○
	C19 (920)		Terminal 1 gain (torque/magnetic flux)	0.1%	100%	0 to 300%	Set the converted % of the gain side voltage (current) of terminal 1 input. (valid when *Pr. 868* ≠ 0, 5)	○	×	○
	C38 (932)		Terminal 4 bias command (torque/ magnetic flux)	0.1%	0%	0 to 400%	Set the torque/magnetic flux command value on the bias side of terminal 4 input. (valid when *Pr. 858* = 1, 4)	○	×	○
	C39 (932)		Terminal 4 bias (torque/magnetic flux)	0.1%	20%	0 to 300%	Set the converted % of the bias side current (voltage) of terminal 4 input. (valid when *Pr. 858* = 1, 4)	○	×	○
	C40 (933)		Terminal 4 gain command (torque/ magnetic flux)	0.1%	150%	0 to 400%	Set the torque/magnetic flux command value on the bias side of terminal 4 input. (valid when *Pr. 858* = 1, 4)	○	×	○
	C41 (933)		Terminal 4 gain (torque/magnetic flux)	0.1%	100%	0 to 300%	Set the converted % of the gain side current (voltage) of terminal 4 input. (valid when *Pr. 858* = 1, 4)	○	×	○
—	989		Parameter copy alarm release	1	10/100 *	10, 100	Parameters for alarm release at parameter copy * The initial value differs according to the inverter capacity. (55K or less/75k or more)	○	×	○
Buzzer control of the operation panel	990		PU buzzer control	1	1	0	Without buzzer	○	○	○
						1	With buzzer			
PU contrast adjustment	991		PU contrast adjustment	1	58	0 to 63	Contrast adjustment of the LCD of the parameter unit (FR-PU04/FR-PU07) can be performed. 0 (Light) → 63 (Dark)	○	×	○
Parameter clear, parameter copy	Pr.CL		Parameter clear	1	0	0, 1	Setting "1" returns all parameters except calibration parameters to the initial values.			
	ALLC		All parameter clear	1	0	0, 1	Setting "1" returns all parameters to the initial values.			
	Er.CL		Alarm history clear	1	0	0, 1	Setting "1" will clear eight past alarms.			
	PCPY		Parameter copy	1	0	0	Cancel			
						1	Read the source parameters to the operation panel.			
						2	Write the parameters copied to the operation panel to the destination inverter.			
						3	Verify parameters in the inverter and operation panel.			

The parameter number in parentheses is the one for use with the parameter unit (FR-PU04/FR-PU07).

勝 特 力 材 料 886-3-5753170
胜特力电子(上海) 86-21-34970699
胜特力电子(深圳) 86-755-83298787
Http://www.100y.com.tw

4 TROUBLESHOOTING

When an alarm (major failures) occurs in the inverter, the protective function is activated bringing the inverter to an alarm stop and the PU display automatically changes to any of the following error (alarm) indications.
If your fault does not correspond to any of the following errors or if you have any other problem, please contact your sales representative.

- Retention of alarm output signal ..... When the magnetic contactor (MC) provided on the input side of the inverter is opened at the activation of the protective function, the inverter's control power will be lost and the alarm output will not be held.
- Alarm display ..... When the protective function is activated, the operation panel display automatically switches to the above indication.
- Resetting method..... When the protective function is activated, the inverter output is kept stopped. Unless reset, therefore, the inverter cannot restart. *(Refer to page 129.)*
- When the protective function is activated, take the corresponding corrective action, then reset the inverter, and resume operation.
  Not doing so may lead to the inverter fault and damage.

Inverter alarm displays are roughly divided as below.

(1) Error Message
A message regarding operational fault and setting fault by the operation panel (FR-DU07) and parameter unit (FR-PU04 /FR-PU07) is displayed.
The inverter does not shut off output.

(2) Warnings
The inverter does not shut off output even when a warning is displayed. However, failure to take appropriate measures will lead to a major fault.

(3) Minor fault
The inverter does not shut off output.You can also output a minor fault signal by making parameter setting.

(4) Major fault
When the protective function is activated, the inverter output is shut off and an alarm is output.

4.1 Reset method of protective function

(1) Resetting the inverter
The inverter can be reset by performing any of the following operations. Note that the internal thermal integrated value of the electronic thermal relay function and the number of retries are cleared (erased) by resetting the inverter.
Recover about 1s after reset is cancelled.

Operation 1: ..... Using the operation panel, press STOP RESET to reset the inverter.
(Enabled only when the inverter protective function is activated (major fault) (Refer to *page 135* for major fault.))

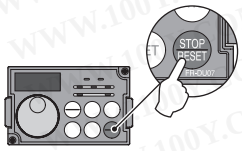

Operation 2: ..... Switch power off once, then switch it on again.

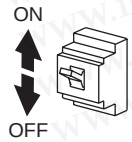

Operation 3: . .... Turn on the reset signal (RES) for more than 0.1s. (If the RES signal is kept on, "Err." appears (flickers) to indicate that the inverter is in a reset status.)

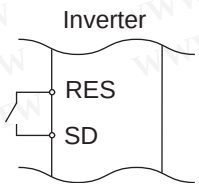

勝 特 力 材 料 886-3-5753170
胜特力电子(上海) 86-21-34970699
胜特力电子(深圳) 86-755-83298787
Http://www.100y.com.tw

4.2 List of alarm display

	Operation Panel Indication		Name	Refer to
Error message	E - - -	E - - -	Alarm history	144
	HOLd	HOLD	Operation panel lock	131
	Er1 to Er4	Er1 to 4	Parameter write error	131
	rE1 to rE4	rE1 to 4	Copy operation error	132
	Err.	Err.	Error	132
Warnings	OL	OL	Stall prevention (overcurrent)	133
	oL	oL	Stall prevention (overvoltage)	133
	rb	RB	Regenerative brake prealarm	134
	TH	TH	Electronic thermal relay function prealarm	134
	PS	PS	PU stop	133
	MT	MT	Maintenance signal output	134
	CP	CP	Parameter copy	134
	SL	SL	Speed limit indication (Output during speed limit)	134
Minor fault	Fn	FN	Fan fault	134
Major fault	E.OC1	E.OC1	Overcurrent shut-off during acceleration	135
	E.OC2	E.OC2	Overcurrent shut-off during constant speed	135
	E.OC3	E.OC3	Overcurrent shut-off during deceleration or stop	135
	E.OV1	E.OV1	Regenerative overvoltage shut-off during acceleration	135
	E.OV2	E.OV2	Regenerative overvoltage shut-off during constant speed	136
	E.OV3	E.OV3	Regenerative overvoltage shut-off during deceleration or stop	136
	E.THT	E.THT	Inverter overload shut-off (electronic thermal relay function)	136
	E.THM	E.THM	Motor overload shut-off (electronic thermal relay function)	136
	E.FIN	E.FIN	Fin overheat	136
	E.IPF	E.IPF	Instantaneous power failure	137
	E.BE	E.BE	Brake transistor alarm detection	137
	E.UVT	E.UVT	Undervoltage	137
	E.ILF	E.ILF*	Input phase failure	137
	E.OLT	E.OLT	Stall prevention	137

	Operation Panel Indication		Name	Refer to
Major fault	E.GF	E.GF	Output side earth (ground) fault overcurrent	138
	E.LF	E.LF	Output phase failure	138
	E.OHT	E.OHT	External thermal relay operation *2	138
	E.PTC	E.PTC*	PTC thermistor operation	138
	E.OPT	E.OPT	Option alarm	138
	E.OP3	E.OP3	Communication option alarm	139
	E. 1 to E. 3	E. 1 to E. 3	Option alarm	139
	E. PE	E.PE	Parameter storage device alarm	139
	E.PUE	E.PUE	PU disconnection	139
	E.rET	E.RET	Retry count excess	140
	E.PE2	E.PE2*	Parameter storage device alarm	139
	E. 6/ E. 7/ E.CPU	E. 6 / E. 7 / E.CPU	CPU error	140
	E.CTE	E.CTE	Operation panel power supply short circuit, RS-485 terminal power supply short circuit	140
	E.P24	E.P24	24VDC power output short circuit	141
	E.CDO	E.CDO*	Output current detection value exceeded	141
	E.IOH	E.IOH*	Inrush current limit circuit alarm	142
	E.SER	E.SER*	Communication error (inverter)	142
	E.AIE	E.AIE*	Analog input error	142
	E.OS	E.OS	Over speed occurence	140
	E.OSD	E.OSD	Speed deviation excess detection	140
	E.ECT	E.OSD	Open cable detection	141
	E. Od	E.OD	Position error large	141
	E.Mb1 to E.Mb7	E.MB1 to E.MB7	Brake sequence error	140
	E.EP	E.EP	Encoder phase error	141
	E. bE	E.BE	Brake transistor alarm detection	137
	E.USb	E.USB*	USB communication error	142
	E. 11	E.11	Opposite rotation deceleration error	142
	E. 13	E.13	Internal circuit error	142

* If an error occurs when using the FR-PU04, "Fault 14" is displayed on the FR-PU04.

勝 特 力 材 料 886-3-5753170
胜特力电子(上海) 86-21-34970699
胜特力电子(深圳) 86-755-83298787
Http://www.100y.com.tw

4.3 Causes and corrective actions

(1) Error Message

A message regarding operational troubles is displayed. Output is not shut off.

Operation Panel Indication	HOLD	HOLd
Name	Operation panel lock	
Description	Operation lock mode is set. Operation other than STOP/RESET is made invalid. *(Refer to page 41.)*	
Check point	—	
Corrective action	Press MODE for 2s to release lock.	

Operation Panel Indication	Er1	Er1
Name	Write disable error	
Description	1. You attempted to make parameter setting when *Pr. 77 Parameter write selection* has been set to disable parameter write. 2. Frequency jump setting range overlapped. 3. Adjustable 5 points V/F settings overlapped 4. The PU and inverter cannot make normal communication	
Check point	1. Check the setting of *Pr. 77 Parameter write selection (Refer to Instruction Manual (applied).)* 2. Check the settings of *Pr. 31 to 36 (frequency jump). (Refer to Instruction Manual (applied).)* 3. Check the settings of *Pr. 100 to Pr. 109 (adjustable 5 points V/F). (Refer to Instruction Manual (applied).)* 4. Check the connection of the PU and inverter.	

Operation Panel Indication	Er2	Er2
Name	Write error during operation	
Description	When parameter write was performed during operation with a value other than "2" (writing is enabled independently of operation status in any operation mode) is set in *Pr. 77* and the STF (STR) is on.	
Check point	1. Check the *Pr. 77* setting. *(Refer to Instruction Manual (applied).)* 2. Check that the inverter is not operating.	
Corrective action	1. Set "2" in *Pr. 77*. 2. After stopping operation, make parameter setting.	

Operation Panel Indication	Er3	Er3
Name	Calibration error	
Description	Analog input bias and gain calibration values are too close.	
Check point	Check the settings of C3, C4, C6 and C7 (calibration functions). *(Refer to Instruction Manual (applied).)*	

Operation Panel Indication	Er4	Er4
Name	Mode designation error	
Description	You attempted to make parameter setting in the NET operation mode when *Pr. 77* is not "2".	
Check point	1. Check that operation mode is "PU operation mode". 2. Check the *Pr. 77* setting. *(Refer to Instruction Manual (applied).)*	
Corrective action	1. After setting the operation mode to the "PU operation mode", make parameter setting. *(Refer to page 54.)* 2. After setting "2" in *Pr. 77*, make parameter setting.	

勝 特 力 材 料 886-3-5753170
胜特力电子(上海) 86-21-34970699
胜特力电子(深圳) 86-755-83298787
Http://www.100y.com.tw

Operation Panel Indication	rE1	rE1
Name	Parameter read error	
Description	An error occurred in the EEPROM on the operation panel side during parameter copy reading.	
Check point	—	
Corrective action	· Make parameter copy again. *(Refer to page 45.)* · Check for an operation panel (FR-DU07) failure. Please contact your sales representative.	

Operation Panel Indication	rE2	rE2
Name	Parameter write error	
Description	1. You attempted to perform parameter copy write during operation. 2. An error occurred in the EEPROM on the operation panel side during parameter copy writing.	
Check point	Is the FWD or REV LED of the operation panel (FR-DU07) lit or flickering?	
Corrective action	1. After stopping operation, make parameter copy again. *(Refer to page 45.)* 2. Check for an operation panel (FR-DU07) failure. Please contact your sales representative.	

Operation Panel Indication	rE3	rE3
Name	Parameter verification error	
Description	1. Data on the operation panel side and inverter side are different. 2. An error occurred in the EEPROM on the operation panel side during parameter verification.	
Check point	Check for the parameter setting of the source inverter and inverter to be verified.	
Corrective action	1. Press SET to continue verification. Make parameter verification again. *(Refer to page 47.)* 2. Check for an operation panel (FR-DU07) failure. Please contact your sales representative.	

Operation Panel Indication	rE4	rE4
Name	Model error	
Description	1. A different model was used for parameter write and verification during parameter copy. 2. When parameter copy write is stopped after parameter copy read is stopped	
Check point	1. Check that the verified inverter is the same model. 2. Check that the power is not turned off or an operation panel is not disconnected, etc. during parameter copy read.	
Corrective action	1. Use the same model (FR-A700 series) for parameter copy and verification. 2. Perform parameter copy read again.	

Operation Panel Indication	Err.	Err.
Description	1. The RES signal is on 2. The PU and inverter cannot make normal communication (contact fault of the connector) 3. When the control circuit power (R1/L11, S1/L21) and the main circuit power (R/L1, S/L2, T/L3) are connected to a separate power, it may appear at turning on of the main circuit. It is not a fault.	
Corrective action	1. Turn off the RES signal. 2. Check the connection of the PU and inverter.	

勝 特 力 材 料 886-3-5753170
胜特力电子(上海) 86-21-34970699
胜特力电子(深圳) 86-755-83298787
Http://www.100y.com.tw

勝 特 力 材 料 886-3-5753170
胜特力电子(上海) 86-21-34970699
胜特力电子(深圳) 86-755-83298787
Http://www.100y.com.tw

(2) Warnings

When the protective function is activated, the output is not shut off.

Operation Panel Indication	OL	OL	FR-PU04 FR-PU07	OL
Name	Stall prevention (overcurrent)			
Description	During acceleration	When the output current (output torque during real sensorless vector control or vector control) of the inverter exceeds the stall prevention operation level (*Pr. 22 Stall prevention operation level*, etc.), this function stops the increase in frequency until the overload current decreases to prevent the inverter from resulting in overcurrent shut-off. When the overload current has decreased below stall prevention operation level, this function increases the frequency again.		
	During constant-speed operation	When the output current (output torque during real sensorless vector control or vector control) of the inverter exceeds the stall prevention operation level (*Pr. 22 Stall prevention operation level*, etc.), this function reduces frequency until the overload current decreases to prevent the inverter from resulting in overcurrent shut-off. When the overload current has decreased below stall prevention operation level, this function increases the frequency up to the set value.		
	During deceleration	When the output current (output torque during real sensorless vector control or vector control) of the inverter exceeds the stall prevention operation level (*Pr. 22 Stall prevention operation level*, etc.), this function stops the decrease in frequency until the overload current decreases to prevent the inverter from resulting in overcurrent shut-off. When the overload current has decreased below stall prevention operation level, this function decreases the frequency again.		
Check point	1. Check that the *Pr. 0 Torque boost* setting is not too large. 2. Check that the *Pr. 7 Acceleration time* and *Pr. 8 Deceleration time* settings are not too small. 3. Check that the load is not too heavy. 4. Are there any failure in peripheral devices? 5. Check that the *Pr. 13 Starting frequency* is not too large. · Check the motor for use under overload.			
Corrective action	1. Increase or decrease the *Pr. 0 Torque boost* value 1% by 1% and check the motor status. *(Refer to page 51.)* 2. Set a larger value in *Pr. 7 Acceleration time* and *Pr. 8 Deceleration time*. *(Refer to page 53.)* 3. Reduce the load weight. 4. Try advanced magnetic flux vector control or real sensorless vector control or vector control. 5. Change the *Pr. 14 Load pattern selection* setting. 6. Set stall prevention operation current in *Pr. 22 Stall prevention operation level*. (The initial value is 150%.) The acceleration/deceleration time may change. Increase the stall prevention operation level with *Pr. 22 Stall prevention operation level*, or disable stall prevention with *Pr. 156 Stall prevention operation selection*. (Use *Pr. 156* to set either operation continued or not at OL operation.)			

Operation Panel Indication	oL	oL	FR-PU04 FR-PU07	oL
Name	Stall prevention (overvoltage)			
Description	During deceleration	· If the regenerative energy of the motor becomes excessive and exceeds the regenerative energy consumption capability, this function stops the decrease in frequency to prevent overvoltage shut-off. As soon as the regenerative energy has decreased, deceleration resumes. · If the regenerative energy of the motor becomes excessive when regeneration avoidance function is selected (*Pr. 882* = 1), this function increases the speed to prevent overvoltage shut-off. *(Refer to Instruction Manual (applied).)*		
Check point	· Check for sudden speed reduction. · Regeneration avoidance function *(Pr. 882 to Pr. 886)* is being used? *(Refer to Instruction Manual (applied).)*			
Corrective action	The deceleration time may change. Increase the deceleration time using *Pr. 8 Deceleration time*.			

Operation Panel Indication	PS	PS	FR-PU04 FR-PU07	PS
Name	PU stop			
Description	Stop with STOP RESET of the PU is set in *Pr. 75 Reset selection/disconnected PU detection/PU stop selection*. (For *Pr. 75*, refer to *Instruction Manual (applied)*.)			
Check point	Check for a stop made by pressing STOP RESET of the operation panel.			
Corrective action	Turn the start signal off and release with PU EXT.			

勝 特 力 材 料 886-3-5753170
胜特力电子(上海) 86-21-34970699
胜特力电子(深圳) 86-755-83298787
Http://www.100y.com.tw

Operation Panel Indication	RB	rb	FR-PU04 FR-PU07	RB
Name	Regenerative brake prealarm			
Description	Appears if the regenerative brake duty reaches or exceeds 85% of the *Pr. 70 Special regenerative brake duty* value. If the regenerative brake duty reaches 100%, a regenerative overvoltage (E. OV_) occurs. The RBP signal can be simultaneously output with the [RB] display. For the terminal used for the RBP signal output, assign the function by setting "7" (positive logic) or "107" (negative logic) in any of *Pr. 190 to Pr. 196 (output terminal function selection)*. *(Refer to 📖 Instruction Manual (applied))*			
Check point	• Check that the brake resistor duty is not high. • Check that the *Pr. 30 Regenerative function selection* and *Pr. 70 Special regenerative brake duty* values are correct.			
Corrective action	• Increase the deceleration time. • Check the *Pr. 30 Regenerative function selection* and *Pr. 70 Special regenerative brake duty* values.			

Operation Panel Indication	TH	TH	FR-PU04 FR-PU07	TH
Name	Electronic thermal relay function prealarm			
Description	Appears if the cumulative value of the *Pr. 9 Electronic thermal O/L relay* reaches or exceeds 85% of the preset level. If it reaches 100% of the *Pr. 9 Electronic thermal O/L relay* setting, a motor overload shut-off (E. THM) occurs. The THP signal can be simultaneously output with the [TH] display. For the terminal used for the THP signal output, assign the function by setting "8" (positive logic) or "108" (negative logic) in any of *Pr. 190 to Pr. 196 (output terminal function selection)*. *(Refer to 📖 Instruction Manual (applied))*			
Check point	1. Check for large load or sudden acceleration. 2. Is the *Pr. 9 Electronic thermal O/L relay* setting is appropriate? *(Refer to page 49.)*			
Corrective action	1. Reduce the load weight or the number of operation times. 2. Set an appropriate value in *Pr. 9 Electronic thermal O/L relay*. *(Refer to page 49.)*			

Operation Panel Indication	MT	MT	FR-PU04 FR-PU07	——— MT
Name	Maintenance signal output			
Description	Indicates that the cumulative energization time of the inverter has reached a given time.			
Check point	The *Pr. 503 Maintenance timer* setting is larger than the *Pr. 504 Maintenance timer alarm output set time* setting. *(Refer to 📖 Instruction Manual (applied).)*			
Corrective action	Setting "0" in *Pr. 503 Maintenance timer* erraces the signal.			

Operation Panel Indication	CP	CP	FR-PU04 FR-PU07	——— CP
Name	Parameter copy			
Description	Appears when parameters are copied between models with capacities of 55K or less and 75K or more.			
Check point	Resetting of *Pr.9, Pr.30, Pr.51, Pr.52, Pr.54, Pr.56, Pr.57, Pr.61, Pr.70, Pr.72, Pr.80, Pr.82, Pr.90 to Pr.94, Pr.158, Pr.455, Pr.458 to Pr.462, Pr.557, Pr.859, Pr.860* and *Pr.893* is necessary.			
Corrective action	Set the initial value in *Pr. 989 Parameter copy alarm release*.			

Operation Panel Indication	SL	SL	FR-PU04 FR-PU07	——— SL
Name	Speed limit indication (output during speed limit)			
Description	Output if the speed limit level is exceeded during torque control.			
Check point	• Check that the torque command is not larger than required. • Check that the speed limit level is not low.			
Corrective action	• Decrease the torque command. • Increase the speed limit level.			

(3) Minor fault

When the protective function is activated, the output is not shut off. You can also output a minor fault signal by making parameter setting. (Set "98" in any of *Pr. 190 to Pr. 196 (output terminal function selection)*. *(Refer to 📖 Instruction Manual (applied).)*)

Operation Panel Indication	FN	Fn	FR-PU04 FR-PU07	FN
Name	Fan fault			
Description	For the inverter that contains a cooling fan, Fn appears on the operation panel when the cooling fan stops due to a fault or different operation from the setting of *Pr. 244 Cooling fan operation selection*.			
Check point	Check the cooling fan for a fault.			
Corrective action	Check for fan fault. Please contact your sales representative.			

勝 特 力 材 料 886-3-5753170
胜特力电子(上海) 86-21-34970699
胜特力电子(深圳) 86-755-83298787
Http://www.100y.com.tw

(4) Major fault

When the protective function is activated, the inverter output is shut off and an alarm is output.

Operation Panel Indication	E.OC1	E.OC1	FR-PU04 FR-PU07	OC During Accs
Name	Overcurrent shut-off during acceleration			
Description	When the inverter output current reaches or exceeds approximately 220% of the rated current during acceleration, the protective circuit is activated to stop the inverter output.			
Check point	1. Check for sudden acceleration. 2. Check that the downward acceleration time is not long in vertical lift application. 3. Check for output short circuit. 4. Check that the *Pr. 3 Base frequency* setting is not 60Hz when the motor rated frequency is 50Hz. 5. Check that stall prevention operation is correct. 6. Check that the regeneration is not performed frequently. (Check that the output voltage becomes larger than the V/F reference voltage at regeneration and overcurrent due to increase in motor current occurs.) 7. Check that the power supply for RS-485 terminal is not shorted. (under vector control)			
Corrective action	1. Increase the acceleration time. (Shorten the downward acceleration time in vertical lift application.) 2. When "E.OC1" is always lit at starting, disconnect the motor once and start the inverter. If "E.OC1" is still lit, contact your sales representative. 3. Check the wiring to make sure that output short circuit does not occur. 4. Set the *Pr. 3 Base frequency* to 50Hz. *(Refer to page 50.)* 5. Perform a correct stall prevention operation. *(Refer to 📖 Instruction Manual (applied).)* 6. Set base voltage (rated voltage of the motor, etc.) in *Pr. 19 Base frequency voltage*. *(Refer to 📖 Instruction Manual (applied).)* 7. Check RS-485 terminal connection. (under vector control)			

Operation Panel Indication	E.OC2	E.OC2	FR-PU04 FR-PU07	Stedy Spd OC
Name	Overcurrent shut-off during constant speed			
Description	When the inverter output current reaches or exceeds approximately 220% of the rated current during constant speed operation, the protective circuit is activated to stop the inverter output.			
Check point	1. Check for sudden load change. 2. Check for output short circuit. 3. Check that stall prevention operation is correct 4. Check that the power supply for RS-485 terminal is not shorted. (under vector control)			
Corrective action	1. Keep load stable. 2. Check the wiring to avoid output short circuit. 3. Check that stall prevention operation setting is correct. *(Refer to 📖 Instruction Manual (applied).)* 4. Check RS-485 terminal connection. (under vector control)			

Operation Panel Indication	E.OC3	E.OC3	FR-PU04 FR-PU07	OC During Dec
Name	Overcurrent shut-off during deceleration or stop			
Description	When the inverter output current reaches or exceeds approximately 220% of the rated inverter current during deceleration (other than acceleration or constant speed), the protective circuit is activated to stop the inverter output.			
Check point	1. Check for sudden speed reduction. 2. Check for output short circuit. 3. Check for too fast operation of the motor's mechanical brake. 4. Check that stall prevention operation setting is correct. 5. Check that the power supply for RS-485 terminal is not shorted. (under vector control)			
Corrective action	1. Increase the deceleration time. 2. Check the wiring to avoid output short circuit. 3. Check the mechanical brake operation. 4. Check that stall prevention operation setting is correct.*(Refer to 📖 Instruction Manual (applied).)* 5. Check RS-485 terminal connection. (under vector control)			

Operation Panel Indication	E.OV1	E.OV1	FR-PU04 FR-PU07	OV During Acc
Name	Regenerative overvoltage shut-off during acceleration			
Description	If regenerative energy causes the inverter's internal main circuit DC voltage to reach or exceed the specified value, the protective circuit is activated to stop the inverter output. The circuit may also be activated by a surge voltage produced in the power supply system.			
Check point	Check for too slow acceleration. (e.g. during descending acceleration with lifting load)			
Corrective action	· Decrease the acceleration time. · Use regeneration avoidance function *(Pr. 882 to Pr. 886)*. *(Refer to 📖 Instruction Manual (applied).)*			

勝 特 力 材 料 886-3-5753170
胜特力电子(上海) 86-21-34970699
胜特力电子(深圳) 86-755-83298787
Http://www.100y.com.tw

Operation Panel Indication	E.OV2	E.Ov2	FR-PU04 FR-PU07	Stedy Spd OV
Name	Regenerative overvoltage shut-off during constant speed			
Description	If regenerative energy causes the inverter's internal main circuit DC voltage to reach or exceed the specified value, the protective circuit is activated to stop the inverter output. The circuit may also be activated by a surge voltage produced in the power supply system.			
Check point	Check for sudden load change.			
Corrective action	· Keep load stable. · Use regeneration avoidance function *(Pr. 882 to Pr. 886). (Refer to 📖 Instruction Manual (applied).)* · Use the brake unit or power regeneration common converter (FR-CV) as required.			

Operation Panel Indication	E.OV3	E.Ov3	FR-PU04 FR-PU07	OV During Dec
Name	Regenerative overvoltage shut-off during deceleration or stop			
Description	If regenerative energy causes the inverter's internal main circuit DC voltage to reach or exceed the specified value, the protective circuit is activated to stop the inverter output. The circuit may also be activated by a surge voltage produced in the power supply system.			
Check point	Check for sudden speed reduction.			
Corrective action	· Increase the deceleration time. (Set the deceleration time which matches the inertia of moment of the load) · Decrease the braking duty. · Use regeneration avoidance function *(Pr. 882 to Pr. 886). (Refer to 📖 Instruction Manual (applied).)* · Use the brake unit or power regeneration common converter (FR-CV) as required.			

Operation Panel Indication	E.THT	E.THT	FR-PU04 FR-PU07	Inv. Overload
Name	Inverter overload shut-off (electronic thermal relay function) *1			
Description	If a current not less than 150% of the rated output current flows and overcurrent shut-off does not occur (220% or less), inverse-time characteristics cause the electronic thermal relay to be activated to stop the inverter output in order to protect the output transistors. (overload immunity 150% 60s)			
Check point	Check the motor for use under overload.			
Corrective action	Reduce the load weight.			

Operation Panel Indication	E.THM	E.THM	FR-PU04 FR-PU07	Motor Overload
Name	Motor overload shut-off (electronic thermal relay function) *1			
Description	The electronic thermal relay function in the inverter detects motor overheat due to overload or reduced cooling capability during constant-speed operation and pre-alarm (TH display) is output when the temperature reaches 85% of the *Pr. 9 Electronic thermal O/L relay* setting and the protection circuit is activated to stop the inverter output when the temperature reaches the specified value. When running a special motor such as a multi-pole motor or multiple motors, provide a thermal relay on the inverter output side since such motor(s) cannot be protected by the electronic thermal relay function.			
Check point	1. Check the motor for use under overload. 2. Check that the setting of *Pr. 71 Applied motor* for motor selection is correct. *(Refer to 📖 Instruction Manual (applied).)* 3. Check that stall prevention operation setting is correct.			
Corrective action	1. Reduce the load weight. 2. For a constant-torque motor, set the constant-torque motor in *Pr. 71 Applied motor*. 3. Check that stall prevention operation setting is correct. *(Refer to 📖 Instruction Manual (applied).)*			

*1 Resetting the inverter initializes the internal thermal integrated data of the electronic thermal relay function.

Operation Panel Indication	E.FIN	E.FIn	FR-PU04 FR-PU07	H/Sink O/Temp
Name	Fin overheat			
Description	If the heatsink overheats, the temperature sensor is actuated to stop the inverter output. The FIN signal can be output when the temperature becomes approximately 85% of the heatsink overheat protection operation temperature. For the terminal used for the FIN signal output, assign the function by setting "26" (positive logic) or "126" (negative logic) in any of *Pr. 190 to Pr. 196 (output terminal function selection). (Refer to 📖 Instruction Manual (applied))*			
Check point	1. Check for too high ambient temperature. 2. Check for heatsink clogging. 3. Check that the cooling fan is stopped. (Check that Fn is displayed on the operation panel.)			
Corrective action	1. Set the ambient temperature to within the specifications. 2. Clean the heatsink. 3. Replace the cooling fan.			

Operation Panel Indication	E.IPF	E.IPF	FR-PU04 FR-PU07	Inst. Pwr. Loss
Name	Instantaneous power failure			
Description	If a power failure occurs for longer than 15ms (this also applies to inverter input shut-off), the instantaneous power failure protective function is activated to stop the inverter output in order to prevent the control circuit from malfunctioning. If a power failure persists for longer than 100ms, the alarm warning output is not provided, and the inverter restarts if the start signal is on upon power restoration. (The inverter continues operating if an instantaneous power failure is within 15ms.) In some operating status (load magnitude, acceleration/ deceleration time setting, etc.), overcurrent or other protection may be activated upon power restoration. When instantaneous power failure protection is activated, the IPF signal is output. *(Refer to Instruction Manual (applied))*			
Check point	Find the cause of instantaneous power failure occurrence.			
Corrective action	· Remedy the instantaneous power failure. · Prepare a backup power supply for instantaneous power failure. · Set the function of automatic restart after instantaneous power failure (*Pr. 57*). *(Refer to Instruction Manual (applied).)*			

Operation Panel Indication	E.BE	E.bE	FR-PU04 FR-PU07	Br. Cct. Fault
Name	Brake transistor alarm detection			
Description	This function stops the inverter output if an alarm occurs in the brake circuit, e.g. damaged brake transistors. In this case, the inverter must be powered off immediately.			
Check point	· Reduce the load inertia. · Check that the frequency of using the brake is proper.			
Corrective action	Replace the inverter.			

Operation Panel Indication	E.UVT	E.UvT	FR-PU04 FR-PU07	Under Voltage
Name	Undervoltage			
Description	If the power supply voltage of the inverter decreases, the control circuit will not perform normal functions. In addition, the motor torque wiil be insufficient and/or heat generation will increase. To prevent this, if the power supply voltage decreases below about 150VAC (300VAC for the 400V class), this function stops the inverter output. When a jumper is not connected across P/+-P1, the undervoltage protective function is activated. When undervoltage protection is activated, the IPF signal is output. *(Refer to Instruction Manual (applied))*			
Check point	1. Check for start of large-capacity motor. 2. Check that a jumper or DC reactor is connected across terminals P/+-P1.			
Corrective action	1. Check the power supply system equipment such as the power supply. 2. Connect a jumper or DC reactor across terminals P/+-P1. If the problem still persists after taking the above measure, please contact your sales representative.			

Operation Panel Indication	E.ILF	E.ILF	FR-PU04 FR-PU07	Fault 14 Input phase loss
Name	Input phase failure			
Description	This alarm is output when function valid setting (=1) is set in *Pr. 872 Input phase failure protection selection* and one phase of the three phase power input opens. *(Refer to Instruction Manual (applied).)*			
Check point	Check for a break in the cable for the three-phase power supply input.			
Corrective action	· Wire the cables properly. · Repair a brake portion in the cable. · Check the *Pr. 872 Input phase failure protection selection* setting.			

Operation Panel Indication	E.OLT	E.OLT	FR-PU04 FR-PU07	Still Prev STP (OL shown during stall prevention operation)
Name	Stall prevention			
Description	If the frequency has fallen to 0.5Hz by stall prevention operation and remains for 3s, an alarm (E.OLT) appears to shutoff the inverter output. OL appears while stall prevention is being activated. When speed control is performed by real sensorless vector control or vector control, an alarm (E.OLT) is displayed and the inverter output is stopped if frequency drops to the *Pr. 865 Low speed detection* (initial value is 1.5Hz) setting by torque limit operation and the output torque exceeds *Pr. 874 OLT level setting* (initial value is 150%) setting and remains for more than 3s.			
Check point	· Check the motor for use under overload. *(Refer to the Instruction Manual (applied).)* · Check that the *Pr. 865 Low speed detection* and *Pr. 874 OLT level setting* values are correct. (Check the *Pr. 22 Stall prevention operation level* setting if V/F control is exercised.)			
Corrective action	· Reduce the load weight. · Change the *Pr. 22 Stall prevention operation level*, *Pr. 865 Low speed detection* and *Pr. 874 OLT level setting* values. (Check the *Pr. 22 Stall prevention operation level* setting if V/F control is exercised.)			

勝 特 力 材 料 886-3-5753170
胜特力电子(上海) 86-21-34970699
胜特力电子(深圳) 86-755-83298787
Http://www.100y.com.tw

Operation Panel Indication	E.GF	E. GF	FR-PU04 FR-PU07	Ground Fault
Name	Output side earth (ground) fault overcurrent			
Description	This function stops the inverter output if an earth (ground) fault overcurrent flows due to an earth (ground) fault that occurred on the inverter's output (load) side.			
Check point	Check for an earth (ground) fault in the motor and connection cable.			
Corrective action	Remedy the earth (ground) fault portion.			

Operation Panel Indication	E.LF	E. LF	FR-PU04 FR-PU07	——
Name	Output phase failure			
Description	This function stops the inverter output if one of the three phases (U, V, W) on the inverter's output side (load side) opens.			
Check point	· Check the wiring (Check that the motor is normal.) · Check that the capacity of the motor used is not smaller than that of the inverter.			
Corrective action	· Wire the cables properly. · Check the *Pr. 251 Output phase failure protection selection* setting.			

Operation Panel Indication	E.OHT	E.OHT	FR-PU04 FR-PU07	OH Fault
Name	External thermal relay operation *2			
Description	If the external thermal relay provided for motor overheat protection, or the internally mounted temperature relay in the motor, etc. switches on (contacts open), the inverter output is stopped.			
Check point	· Check for motor overheating. · Check that the value of 7 (OH signal) is set correctly in any of *Pr. 178 to Pr. 189 (input terminal function selection)*.			
Corrective action	· Reduce the load and operating duty. · Even if the relay contacts are reset automatically, the inverter will not restart unless it is reset.			

*2 Functions only when any of *Pr. 178 to Pr. 189 (input terminal function selection)* is set to OH.

Operation Panel Indication	E.PTC	E.PTC	FR-PU04 FR-PU07	Fault 14 PTC activated
Name	PTC thermistor operation			
Description	Appears when the motor overheat status is detected for 10s or more by the external PTC thermistor input connected to the terminal AU.			
Check point	· Check the connection between the PTC thermistor switch and thermal protector. · Check the motor for operation under overload. · Is valid setting (= 63) selected in *Pr. 184 AU terminal function selection* ? *(Refer to 📖 Instruction Manual (applied).)*			
Corrective action	Reduce the load weight.			

Operation Panel Indication	E.OPT	E.OPT	FR-PU04 FR-PU07	Option Fault
Name	Option alarm			
Description	Appears when the AC power supply is connected to the terminal R/L1, S/L2, T/L3 accidentally when a high power factor converter is connected. Appears when torque command by the plug-in option is selected using *Pr. 804 Torque command source selection* and no plug-in option is mounted. Appears when the switch for the manufacturer setting of the plug-in option is changed.			
Check point	· Check that the AC power supply is not connected to the terminal R/L1, S/L2, T/L3 when a high power factor converter (FR-HC, MT-HC) or power regeneration common converter (FR-CV) is connected. · Check that the plug-in option for torque command setting is connected.			
Corrective action	· Check the parameter (*Pr. 30*) setting and wiring. · The inverter may be damaged if the AC power supply is connected to the terminal R/L1, S/L2, T/L3 when a high power factor converter is connected. Please contact your sales representative. · Check for connection of the plug-in option. Check the *Pr. 804 Torque command source selection* setting. · Return the switch for the manufacturer setting of the plug-in option to the initial status. *(Refer to 📖 instruction manual of each option)*			

勝 特 力 材 料 886-3-5753170
胜特力电子(上海) 86-21-34970699
胜特力电子(深圳) 86-755-83298787
Http://www.100y.com.tw

Operation Panel Indication	E.OP3	E.OP3	FR-PU04 FR-PU07	Option slot alarm 3
Name	Communication option alarm			
Description	Stops the inverter output when a communication line error occurs in the communication option.			
Check point	· Check for a wrong option function setting and operation. · Check that the plug-in option is plugged into the connector securely. · Check for a brake in the communication cable. · Check that the terminating resistor is fitted properly.			
Corrective action	· Check the option function setting, etc. · Connect the plug-in option securely. · Check the connection of communication cable.			

Operation Panel Indication	E. 1 to E. 3	E. 1 to E. 3	FR-PU04 FR-PU07	Fault 1 to Fault 3
Name	Option alarm			
Description	Stops the inverter output if a contact faullt or the like of the connector between the inverter and communication option occurs or if a communication option is fitted to the connector 1 or 2. Appears when the switch for the manufacturer setting of the plug-in option is changed.			
Check point	1. Check that the plug-in option is plugged into the connector securely. (1 to 3 indicate the option connector numbers.) 2. Check for excess electrical noises around the inverter. 3. Check that the communication option is not fitted to the connector 1 or 2.			
Corrective action	1. Connect the plug-in option securely. 2. Take measures against noises if there are devices producing excess electrical noises around the inverter. If the problem still persists after taking the above measure, please contact your sales representative or distributor. 3. Fit the communication option to the connector 3. 4. Return the switch for the manufacturer setting of the plug-in option to the initial status. *(Refer to instruction manual of each option)*			

Operation Panel Indication	E.PE	E.PE	FR-PU04 FR-PU07	Corrupt Memry
Name	Parameter storage device alarm (control circuit board)			
Description	A fault occurred in parameters stored (EEPROM failure)			
Check point	Check for too many number of parameter write times.			
Corrective action	Please contact your sales representative. When performing parameter write frequently for communication purposes, set "1" in *Pr. 342* to enable RAM write. Note that powering off returns the inverter to the status before RAM write.			

Operation Panel Indication	E.PE2	E.PE2	FR-PU04 FR-PU07	Fault 14 PR storage alarm
Name	Parameter storage device alarm (main circuit board)			
Description	A fault occurred in parameters stored (EEPROM failure)			
Check point	———			
Corrective action	Please contact your sales representative.			

Operation Panel Indication	E.PUE	E.PUE	FR-PU04 FR-PU07	PU Leave Out
Name	PU disconnection			
Description	This function stops the inverter output if communication between the inverter and PU is suspended, e.g. the operation panel and parameter unit is disconnected, when "2", "3", "16" or "17" was set in *Pr. 75 Reset selection/disconnected PU detection/PU stop selection*. This function stops the inverter output when communication errors occurred consecutively for more than permissible number of retries when a value other than "9999" is set in *Pr. 121 Number of PU communication retries* during the RS-485 communication with the PU connector. This function also stops the inverter output if communication is broken for the period of time set in *Pr. 122 PU communication check time interval*.			
Check point	· Check that the FR-DU07 or parameter unit (FR-PU04/FR-PU07) is fitted tightly. · Check the *Pr. 75* setting.			
Corrective action	Fit the FR-DU07 or parameter unit (FR-PU04/FR-PU07) securely.			

勝 特 力 材 料 886-3-5753170
胜特力电子(上海) 86-21-34970699
胜特力电子(深圳) 86-755-83298787
Http://www.100y.com.tw

勝 特 力 材 料 886-3-5753170
胜特力电子(上海) 86-21-34970699
胜特力电子(深圳) 86-755-83298787
Http://www.100y.com.tw

Operation Panel Indication	**E.RET**	E.rET	**FR-PU04 FR-PU07**	**Retry No Over**
Name	Retry count excess			
Description	If operation cannot be resumed properly within the number of retries set, this function stops the inverter output.			
Check point	Find the cause of alarm occurrence.			
Corrective action	Eliminate the cause of the error preceding this error indication.			

Operation Panel Indication	**E. 6**	E. 6	**FR-PU04 FR-PU07**	**Fault 6**
	E. 7	E. 7		**Fault 7**
	E.CPU	E.CPU		**CPU Fault**
Name	CPU error			
Description	Stops the inverter output if the communication error of the built-in CPU occurs.			
Check point	Check for devices producing excess electrical noises around the inverter.			
Corrective action	· Take measures against noises if there are devices producing excess electrical noises around the inverter. · Please contact your sales representative.			

Operation Panel Indication	**E.CTE**	E.CTE	**FR-PU04**	——
			FR-PU07	**E.CTE**
Name	Operation panel power supply short circuit, RS-485 terminal power supply short circuit			
Description	When the operation panel power supply (PU connector) is shorted, this function shuts off the power output. At this time, the operation panel (parameter unit) cannot be used and RS-485 communication from the PU connector cannot be made. When the power supply for the RS-485 terminals are shorted, this function shuts off the power output. At this time, communication from the RS-485 terminals cannot be made. To reset, enter the RES signal or switch power off, then on again.			
Check point	1. Check for a short circuit in the PU connector cable. 2. Check that the RS-485 terminals are connected correctly.			
Corrective action	1. Check the PU and cable. 2. Check the connection of the RS-485 terminals			

Operation Panel Indication	**E.MB1 to 7**	E.Mb1 to E.Mb7	**FR-PU04**	——
			FR-PU07	**E.MB1 Fault to E.MB7 Fault**
Name	Brake sequence error			
Description	The inverter output is stopped when a sequence error occurs during use of the brake sequence function (*Pr. 278* to *Pr. 285*).			
Check point	Find the cause of alarm occurrence.			
Corrective action	Check the set parameters and perform wiring properly.			

Operation Panel Indication	**E.OS**	E.OS	**FR-PU04 FR-PU07**	**Overspeed occurrence**
Name	Over speed occurence			
Description	Appears when the motor speed reaches and exceedes the overspeed setting level under encoder feedback control or vector control.			
Check point	· Check that the *Pr. 374 Overspeed detection level* value is correct. · Check that the number of encoder pulses does not differ from the actual number of encoder pulses.			
Corrective action	· Set the *Pr. 374 Overspeed detection level* value correctly. · Set the correct number of encoder pulses in *Pr. 369 Number of encoder pulses*.			

Operation Panel Indication	**E.OSD**	E.OSd	**FR-PU04 FR-PU07**	**Excessive speed deflection**
Name	Speed deviation excess detection			
Description	Stops the inverter output if the motor speed is increased or decreased under the influence of the load etc. during vector control and cannot be controlled in accordance with the speed command value.			
Check point	· Check that the values of *Pr.285 Excessive speed deviation detection frequency* and *Pr.853 Speed deviation time* are correct. · Check for sudden load change. · Check that the number of encoder pulses does not differ from the actual number of encoder pulses.			
Corrective action	· Set *Pr.285 Excessive speed deviation detection frequency* and *Pr.853 Speed deviation time* correctly. · Keep load stable. · Set the correct number of encoder pulses in *Pr. 369 Number of encoder pulses*.			

Operation Panel Indication	E.ECT	E.ECT	FR-PU04 FR-PU07	No encoder signal
Name	Open cable detection			
Description	Stops the inverter output when the encoder signal is shut off under orientation control, encoder feedback control or vector control.			
Check point	· Check for the encoder signal loss. · Check that the encoder specifications are correct. · Check for a loose connector. · Check that the switch setting of the FR-A7AP is correct. · Check that the power is supplied to the encoder. Or, check that the power is not supplied to the encoder later than the inverter.			
Corrective action	· Remedy the open cable. · Use an encoder that meets the specifications. · Make connection securely. · Make a switch setting of the FR-A7AP correctly. *(Refer to page 29)* · Supply the power to the encoder. Or supply the power to the encoder at the same time when the power is supplied to the inverter. If the power is supplied to the encoder after the inverter, check that the encoder signal is securely sent and set "0" in *Pr.376*.			

Operation Panel Indication	E.EOD	E. Od	FR-PU04 FR-PU07	Fault 14 Excessive position error
Name	Position error large			
Description	Indicates that the difference between the position command and position feedback exceeded the reference under position control.			
Check point	· Check that the position detecting encoder mounting orientation matches the parameter. · Check that the load is not large. · Check that the *Pr. 427 Excessive level error* and *Pr. 369 Number of encoder pulses* are correct.			
Corrective action	· Check the parameters. · Reduce the load weight. · Set the *Pr. 427 Excessive level error* and *Pr. 369 Number of encoder pulses* correctly.			

Operation Panel Indication	E.EP	E.EP	FR-PU04 FR-PU07	Fault 14 E.EP
Name	Encoder phase error			
Description	The rotation command of the inverter differs from the actual motor rotation direction detected from the encoder during offline auto tuning.			
Check point	· Check for mis-wiring of the encoder cable. · Check for wrong setting of *Pr. 359 Encoder rotation direction*.			
Corrective action	· Perform connection and wiring securely. · Change the *Pr. 359 Encoder rotation direction* value.			

Operation Panel Indication	E.P24	E.P24	FR-PU04 FR-PU07	E.P24
Name	24VDC power output short circuit			
Description	When the 24VDC power output from the PC terminal is shorted, this function shuts off the power output. At this time, all external contact inputs switch off. The inverter cannot be reset by entering the RES signal. To reset it, use the operation panel or switch power off, then on again.			
Check point	· Check for a short circuit in the PC terminal output.			
Corrective action	· Remedy the earth (ground) fault portion.			

Operation Panel Indication	E.CDO	E.CdO	FR-PU04 FR-PU07	Fault 14 OC detect level
Name	Output current detection value exceeded			
Description	This function is activated when the output current exceeds the *Pr. 150 Output current detection level* setting.			
Check point	Check the settings of *Pr. 150 Output current detection level*, *Pr. 151 Output current detection signal delay time*, *Pr. 166 Output current detection signal retention time*, *Pr. 167 Output current detection operation selection*. *(Refer to Instruction Manual (applied).)*			

勝 特 力 材 料 886-3-5753170
胜特力电子(上海) 86-21-34970699
胜特力电子(深圳) 86-755-83298787
Http://www.100y.com.tw

勝 特 力 材 料 886-3-5753170
胜特力电子(上海) 86-21-34970699
胜特力电子(深圳) 86-755-83298787
Http://www.100y.com.tw

Operation Panel Indication	E.IOH	E.IOH	FR-PU04 FR-PU07	Fault 14 Inrush overheat
Name	Inrush current limit circuit alarm			
Description	This function is activated when the resistor of the inrush current limit circuit overheats. The inrush current limit circuit failure			
Check point	Check that frequent power ON/OFF is not repeated.			
Corrective action	Configure a circuit where frequent power ON/OFF is not repeated. If the problem still persists after taking the above measure, please contact your sales representative.			

Operation Panel Indication	E.SER	E.SEr	FR-PU04 FR-PU07	Fault 14 VFD Comm error
Name	Communication error (inverter)			
Description	This function stops the inverter output when communication error occurs consecutively for more than permissible retry count when a value other than "9999" is set in *Pr. 335 RS-485 communication retry count* during RS-485 communication from the RS-485 terminals. This function also stops the inverter output if communication is broken for the period of time set in *Pr. 336 RS-485 communication check time interval*.			
Check point	Check the RS-485 terminal wiring.			
Corrective action	Perform wiring of the RS-485 terminals properly.			

Operation Panel Indication	E.AIE	E.AIE	FR-PU04 FR-PU07	Fault 14 Analog in error
Name	Analog input error			
Description	Appears when 30mA or more is input or a voltage (7.5V or more) is input with the terminal 2/4 set to current input.			
Check point	Check the setting of *Pr. 73 Analog input selection* and *Pr. 267 Terminal 4 input selection*. *(Refer to 📖 Instruction Manual (applied).)*			
Corrective action	Either give a frequency command by current input or set *Pr. 73 Analog input selection* or *Pr. 267 Terminal 4 input selection* to voltage input.			

Operation Panel Indication	E.USB	E.USb	FR-PU04 FR-PU07	Fault 14 USB comm error
Name	USB communication error			
Description	When the time set in *Pr. 548 USB communication check time interval* has broken, this function stops the inverter output.			
Check point	Check the USB communication cable.			
Corrective action	· Check the *Pr. 548 USB communication check time interval* setting. · Check the USB communication cable. · Increase the *Pr. 548 USB communication check time interval* setting. Or, change the setting to 9999. *(Refer to 📖 Instruction Manual (applied))*			

Operation Panel Indication	E.11	E. 11	FR-PU04 FR-PU07	Fault 11
Name	Opposite rotation deceleration error			
Description	The speed may not decelerate during low speed operation if the rotation direction of the speed command and the estimated speed differ when the rotation is changing from forward to reverse (or from reverse to forward) under real sensorless vector control. At this time, the inverter output is stopped if the rotation direction will not change, causing overload.			
Check point	· Check that the *Pr. 71 Applied motor* setting is appropriate. · Check that offline auto tuning and online auto tuning have been performed.			
Corrective action	· Check the setting of *Pr. 71 Applied motor*. · Perform offline auto tuning, then online auto tuning. · Please contact your sales representative.			

Operation Panel Indication	E.13	E. 13	FR-PU04 FR-PU07	Fault 13
Name	Internal circuit error			
Description	Appears when an internal circuit error occurred.			
Corrective action	Please contact your sales representative.			

CAUTION

- If protective functions of E.ILF, E.PTC, E.PE2, E.EP, E.OD, E.CDO, E.IOH, E.SER, E.AIE, E.USB are activated when using the FR-PU04, "Fault 14" appears.
  Also when the alarm history is checked on the FR-PU04, the display is "E.14".
- If alarms other than the above appear, contact your sales representative.

4.4 Correspondences between digital and actual characters

There are the following correspondences between the actual alphanumeric characters and the digital characters displayed on the operation panel.

Actual	Digital
0	0
1	1
2	2
3	3
4	4
5	5
6	6
7	7
8	8
9	9

Actual	Digital
A	A
B	b
C	C
D	d
E	E
F	F
G	G
H	H
I	I
J	J
L	L

Actual	Digital
M	M
N	n
O	O
o	o
P	P
S	S
T	T
U	U
V	v
r	r
-	-

勝 特 力 材 料 886-3-5753170
胜特力电子(上海) 86-21-34970699
胜特力电子(深圳) 86-755-83298787
Http://www.100y.com.tw

4.5 Check and clear of the alarm history

(1) Check for the alarm (major fault) history

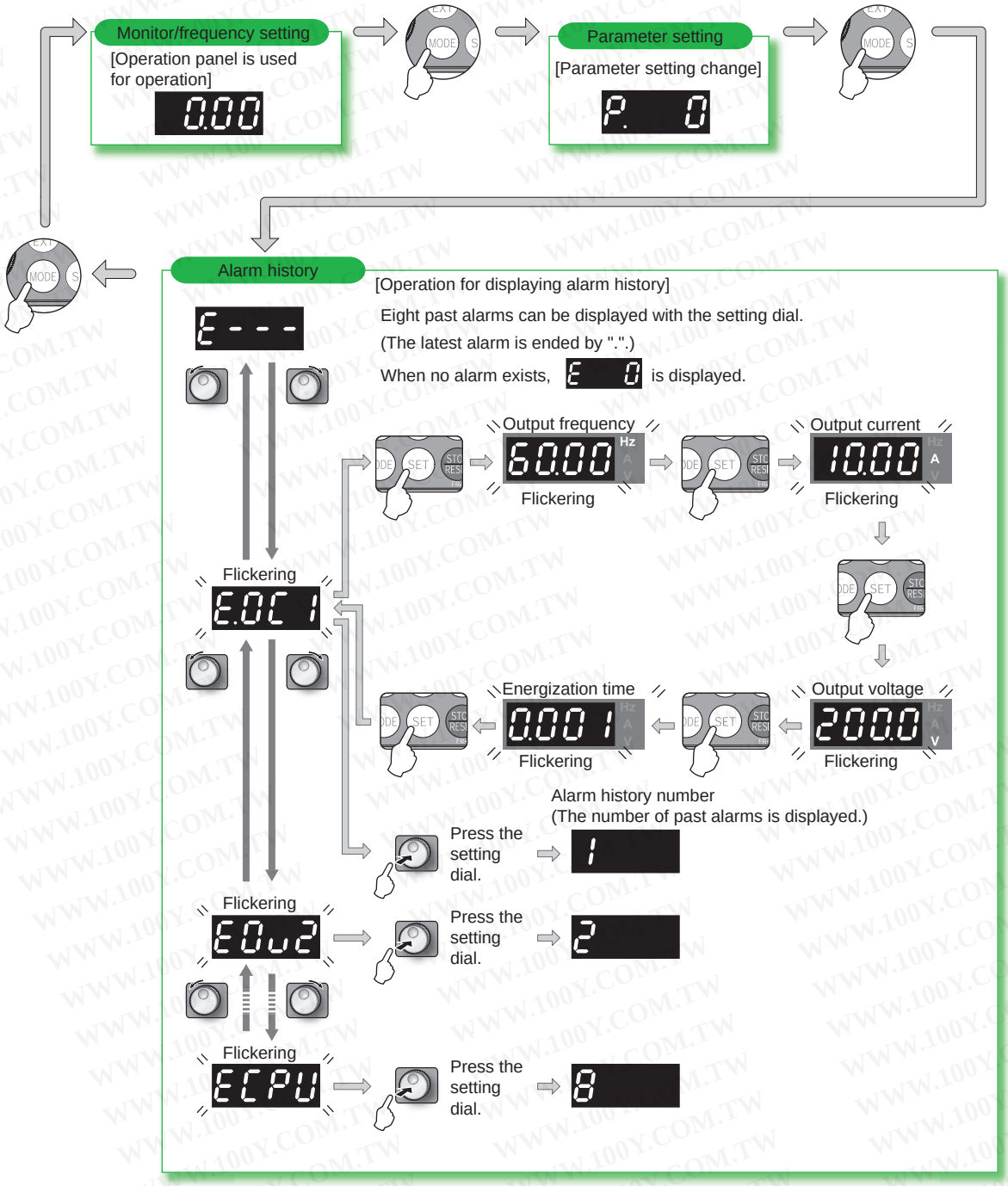

勝 特 力 材 料 886-3-5753170
胜特力电子(上海) 86-21-34970699
胜特力电子(深圳) 86-755-83298787
Http://www.100y.com.tw

(2) Clearing procedure

POINT

- The alarm history can be cleared by setting "1" in *Er.CL Alarm history clear*. (The alarm history is not cleared when "1" is set in *Pr. 77 Parameter write selection*)

Operation	Display
1. Screen at powering on The monitor display appears.	0.00 Hz MON EXT
2. Press MODE to choose the parameter setting mode.	MODE ⇨ P. 0 (The parameter number previously read appears.)
3. Turn ◎ until Er.CL (alarm history clear) appears.	⇨ Er.CL
4. Press SET to read the currently set value. "0"(initial value) appears.	SET ⇨ 0
5. Turn ◎ to change it to the setting value "1".	⇨ 1
6. Press SET to set.	SET ⇨ 1 ↔ Er.CL

Flicker ··· Alarm history clear complete!!

- Press ◎ to read another parameter.
- Press SET to show the setting again.
- Press SET twice to show the next parameter.

勝 特 力 材 料 886-3-5753170
胜特力电子(上海) 86-21-34970699
胜特力电子(深圳) 86-755-83298787
Http://www.100y.com.tw

勝 特 力 材 料 886-3-5753170
胜特力电子(上海) 86-21-34970699
胜特力电子(深圳) 86-755-83298787
Http://www.100y.com.tw

4.6 Check first when you have troubles

POINT

If the cause is still unknown after every check, it is recommended to initialize the parameters (initial value) then reset the required parameter values and check again.

4.6.1 Motor does not rotate as commanded

1) Check the *Pr.0 Torque boost* setting if V/F control is exercised.

2) Check the main circuit
- Check that a proper power supply voltage is applied (operation panel display is provided).
- Check that the motor is connected properly.
- Check that the jumper across P/+-P1 is connected.

3) Check the input signals
- Check that start signal is input.
- Check that both the forward and reverse rotation start signals are not input simultaneously.
- Check that the frequency setting signal is not zero. (When the frequency command is 0Hz and the start command is entered, FWD or REV LED on the operation panel flickers.)
- Check that the AU signal is on when the frequency setting signal is 4 to 20mA.
- Check that the output stop signal (MRS) or reset signal (RES) is not on.
- Check that the CS signal is not OFF with automatic restart after instantaneous power failure function is selected (*Pr. 57* ≠ "9999").
- Check that the sink or source jumper connector is fitted securely. *(Refer to page 23)*

4) Check the parameter settings
- Check that *Pr. 78 Reverse rotation prevention selection* is not selected.
- Check that the *Pr. 79 Operation mode selection* setting is correct.
- Check that the bias and gain *(calibration parameter C2 to C7)* settings are correct.
- Check that the *Pr. 13 Starting frequency* setting is not greater than the running frequency.
- Check that frequency settings of each running frequency (such as multi-speed operation) are not zero. Check that especially the *Pr. 1 Maximum frequency* setting is not zero.
- Check that the *Pr. 15 Jog frequency* setting is not lower than the *Pr. 13 Starting frequency* setting.

5) Inspection of load
- Check that the load is not too heavy.
- Check that the shaft is not locked.

4.6.2 Motor generates abnormal noise

- No carrier frequency noises (metallic noises) are generated.
  - Soft-PWM control to change the motor tone into an unoffending complex tone is factory-set to valid by *Pr. 72 PWM frequency selection*.
    Adjust *Pr. 72 PWM frequency selection* to change the motor tone.
- Check that the gain value under real sensorless vector control or vector control is not too high. Check the setting of *Pr. 820 (Pr. 830) Speed control P gain* when speed control is exercised and *Pr. 824 (Pr. 834) Torque control P gain* when torque control is exercised.
- Check for any mechanical looseness.
- Contact the motor manufacturer.

4.6.3 Motor generates heat abnormally

- Is the fan for the motor is running? (Check for accumulated dust.)
- Check that the load is not too heavy. Lighten the load.
- Check that the inverter output voltages (U, V, W) balanced.
- Check that the *Pr. 0 Torque boost* setting is correct.
- Was the motor type set? Check the setting of *Pr. 71 Applied motor*.
- When using any other manufacturer's motor, perform offline auto tuning. *(Refer to page 63.)*

4.6.4 Motor rotates in opposite direction

- Check that the phase sequence of output terminals U, V and W is correct.
- Check that the start signals (forward rotation, reverse rotation) are connected properly. *(Refer to page 78)*

4.6.5 Speed greatly differs from the setting

- Check that the frequency setting signal is correct. (Measure the input signal level.)
- Check that the *Pr. 1, Pr. 2, Pr. 19, Calibration parameter C2 to C7* settings are correct
- Check that the input signal lines are not affected by external noise.
  (Use shielded cables)
- Check that the load is not too heavy.
- Check that the *Pr. 31* to *Pr. 36* (frequency jump) settings are correct.

4.6.6 Acceleration/deceleration is not smooth

- Check that the acceleration and deceleration time settings are not too short.
- Check that the load is not too heavy.
- Check that the torque boost (*Pr. 0, Pr. 46, Pr. 112*) setting is not too large to activate the stall function (torque limit).

4.6.7 Motor current is large

- Check that the load is not too heavy.
- Check that the *Pr. 0 Torque boost* setting is correct.
- Check that the *Pr. 3 Base frequency* setting is correct.
- Check that the *Pr. 14 Load pattern selection* setting is appropriate.
- Check that the *Pr. 19 Base frequency voltage* setting is correct.

勝 特 力 材 料 886-3-5753170
胜特力电子(上海) 86-21-34970699
胜特力电子(深圳) 86-755-83298787
Http://www.100y.com.tw

4.6.8 Speed does not increase

- Check that the maximum frequency *(Pr. 1)* setting is correct. (If you want to run the motor at 120Hz or more, set *Pr. 18 High speed maximum frequency*. *(Refer to Instruction Manual (applied).)*)
- Check that the load is not too heavy.
  (In agitators, etc., load may become heavier in winter.)
- Check that the torque boost *(Pr.0, Pr.46, Pr.112)* setting is not too large to activate the stall function under V/F control.
- Check that the brake resistor is not connected to terminals P/+-P1 accidentally.

4.6.9 Speed varies during operation

When advanced magnetic flux vector control, real sensorless vector control, vector control or encoder feedback control is exercised, the output frequency varies with load fluctuation between 0 and 2Hz. This is a normal operation and is not a fault.

1) Inspection of load
- Check that the load is not varying.

2) Check the input signals
- Check that the frequency setting signal is not varying.
- Check that the frequency setting signal is not affected by noise. Input filter to the analog input terminal using *Pr. 74 Input filter time constant* and *Pr. 822 Speed setting filter 1*.
- Check for a malfunction due to undesirable currents when the transistor output unit is connected. *(Refer to page 24)*

3) Others
- Check that the settings of *Pr. 80 Motor capacity* and *Pr. 81 Number of motor poles* are correct to the inverter capacity and motor capacity under advanced magnetic flux vector control, real sensorless vector control or vector control.
- Check that the wiring length is not exceeding 30m when advanced magnetic flux vector, real sensorless vector control or vector control is exercised. Perform offline auto tuning. *(Refer to Instruction Manual (applied))*
- Check that the wiring length is not too long for V/F control

4.6.10 Operation mode is not changed properly

If the operation mode does not change correctly, check the following:

1) Inspection of load

Check that the STF or STR signal is off.
When it is on, the operation mode cannot be changed.

2) Parameter setting

Check the *Pr. 79* setting.
When the *Pr. 79 Operation mode selection* setting is "0" (initial value), the inverter is placed in the external operation mode at input power-on. At this time, press PU/EXT on the operation panel (press PU when the parameter unit (FR-PU04/FR-PU07) is used) to switch to the PU operation mode.

4.6.11 Operation panel (FR-DU07) display is not operating

Check that the operation panel is connected to the inverter securely.

4.6.12 POWER lamp is not lit

Check that wiring is securely performed and installation is correct.

4.6.13 Parameter write cannot be performed

Make sure that operation is not being performed (signal STF or STR is not ON).
Make sure that you are not attempting to set the parameter in the external operation mode.
Check *Pr. 77 Parameter write selection.*
Check *Pr. 161 Frequency setting/key lock operation selection*.

勝 特 力 材 料 886-3-5753170
胜特力电子(上海) 86-21-34970699
胜特力电子(深圳) 86-755-83298787
Http://www.100y.com.tw

5 PRECAUTIONS FOR MAINTENANCE AND INSPECTION

The inverter is a static unit mainly consisting of semiconductor devices. Daily inspection must be performed to prevent any fault from occurring due to the adverse effects of the operating environment, such as temperature, humidity, dust, dirt and vibration, changes in the parts with time, service life, and other factors.

• Precautions for maintenance and inspection

For some short time after the power is switched off, a high voltage remains in the smoothing capacitor. When accessing the inverter for inspection, wait for at least 10 minutes after the power supply has been switched off, and then make sure that the voltage across the main circuit terminals P/+-N/– of the inverter is not more than 30VDC using a tester, etc.

5.1 Inspection item

5.1.1 Daily inspection

Basically, check for the following faults during operation.
(1) Motor operation fault
(2) Improper installation environment
(3) Cooling system fault
(4) Unusual vibration and noise
(5) Unusual overheat and discoloration
During operation, check the inverter input voltages using a tester.

5.1.2 Periodic inspection

Check the areas inaccessible during operation and requiring periodic inspection.
Consult us for periodic inspection.
1) Check for cooling system fault ..... Clean the air filter, etc.
2) Tightening check and retightening ..... The screws and bolts may become loose due to vibration, temperature changes, etc.
Tighten them according to the specified tightening torque. *(Refer to page 15)*
3) Check the conductors and insulating materials for corrosion and damage.
4) Measure insulation resistance.
5) Check and change the cooling fan and relay.

勝 特 力 材 料 886-3-5753170
胜特力电子(上海) 86-21-34970699
胜特力电子(深圳) 86-755-83298787
Http://www.100y.com.tw

勝 特 力 材 料 886-3-5753170
胜特力电子(上海) 86-21-34970699
胜特力电子(深圳) 86-755-83298787
Http://www.100y.com.tw

5.1.3 Daily and periodic inspection

Area of Inspection	Inspection Item	Description	Interval: Daily	Interval: Periodic *2	Corrective Action at Alarm Occurrence	Customer's Check
General	Surrounding environment	Check the ambient temperature, humidity, dirt, corrosive gas, oil mist , etc	○		Improve emvironment	
	Overall unit	Check for unusual vibration and noise	○		Check alarm location and retighten	
	Power supply voltage	Check that the main circuit voltages and control voltages are normal *1	○		Inspect the power supply	
Main circuit	General	(1) Check with megger (across main circuit terminals and earth (ground) terminal). (2) Check for loose screws and bolts. (3) Check for overheat traces on the parts. (4) Check for stain		○ ○ ○ ○	Contact the manufacturer Retighten Contact the manufacturer Clean	
	Conductors, cables	(1) Check conductors for distortion. (2) Check cable sheaths for breakage and deterioration (crack, discoloration, etc.)		○ ○	Contact the manufacturer Contact the manufacturer	
	Transformer/reactor	Check for unusual odor and abnormal increase in whining sound.	○		Stop the device and contact the manufacturer.	
	Terminal block	Check for damage.		○	Stop the device and contact the manufacturer.	
	Smoothing aluminum electrolytic capacitor	(1) Check for liquid leakage. (2) Check for safety valve projection and bulge. (3) Visual check and judge by the life check of the main circuit capacitor *(Refer to page 151)*		○ ○ ○	Contact the manufacturer Contact the manufacturer	
	Relay/contactor	Check that the operation is normal and no chatter is heard.		○	Contact the manufacturer	
	Resistor	(1) Check for crack in resistor insulation. (2) Check for a break in the cable.		○ ○	Contact the manufacturer Contact the manufacturer	
Control circuit protective circuit	Operation check	(1) Check that the output voltages across phases with the inverter operated alone is balanced (2) Check that no fault is found in protective and display circuits in a sequence protective operation test.		○ ○	Contact the manufacturer Contact the manufacturer	
	Parts check: Overall	(1) Check for unusual odor and discoloration. (2) Check for serious rust development		○ ○	Stop the device and contact the manufacturer. Contact the manufacturer	
	Parts check: Aluminum electrolytic capacitor	(1) Check for liquid leakage in a capacitor and deformation trance (2) Visual check and judge by the life check of the control circuit capacitor. *(Refer to page 151.)*		○ ○	Contact the manufacturer	
Cooling system	Cooling fan	(1) Check for unusual vibration and noise. (2) Check for loose screws and bolts (3) Check for stain	○	 ○ ○	Replace the fan Retighten Clean	
	Heatsink	(1) Check for clogging (2) Check for stain		○ ○	Clean Clean	
	Air filter, etc.	(1) Check for clogging (2) Check for stain		○ ○	Clean or replace Clean or replace	
Display	Indication	(1) Check that display is normal. (2) Check for stain	○	 ○	Contact the manufacturer Clean	
	Meter	Check that reading is normal	○		Stop the device and contact the manufacturer.	
Load motor	Operation check	Check for vibration and abnormal increase in operation noise	○		Stop the device and contact the manufacturer.	

*1 It is recommended to install a device to monitor voltage for checking the power supply voltage to the inverter.
*2 One to two years of periodic inspection cycle is recommended. However, it differs according to the installation environment. Consult us for periodic inspection.

5.1.4 Display of the life of the inverter parts

The self-diagnostic alarm is output when the life span of the control circuit capacitor, cooling fan, each parts of the inrush current limit circuit is near to give an indication of replacement time .

The life alarm output can be used as a guideline for life judgement.

Parts	Judgement Level
Main circuit capacitor	85% of the initial capacity
Control circuit capacitor	Estimated 10% life remaining
Inrush current limit circuit	Estimated 10% life remaining (Power on: 100,000 times left)
Cooling fan	Less than 40% of the predetermined speed

For the life check of the main circuit capacitor, the alarm signal (Y90) will not be output if a measuring method of (2) is not performed. *(Refer to page 152.)*

(1) Display of the life alarm

- *Pr. 255 Life alarm status display* can be used to confirm that the control circuit capacitor, main circuit capacitor, cooling fan, and each parts of the inrush current limit circuit has reached the life alarm output level.

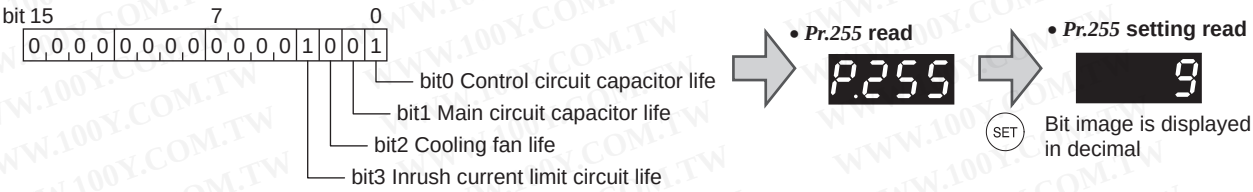

Pr. 255 (decimal)	Bit (binary)	Inrush Current Limit Circuit Life	Cooling Fan Life	Main Circuit Capacitor Life	Control Circuit Capacitor Life
15	1111	○	○	○	○
14	1110	○	○	○	×
13	1101	○	○	×	○
12	1100	○	○	×	×
11	1011	○	×	○	○
10	1010	○	×	○	×
9	1001	○	×	×	○
8	1000	○	×	×	×
7	0111	×	○	○	○
6	0110	×	○	○	×
5	0101	×	○	×	○
4	0100	×	○	×	×
3	0011	×	×	○	○
2	0010	×	×	○	×
1	0001	×	×	×	○
0	0000	×	×	×	×

○: with alarm, ×: without alarm

POINT

Life check of the main circuit capacitor needs to be done by *Pr. 259*. (Refer to the following.)

勝 特 力 材 料 886-3-5753170
胜特力电子(上海) 86-21-34970699
胜特力电子(深圳) 86-755-83298787
Http://www.100y.com.tw

勝 特 力 材 料 886-3-5753170
胜特力电子(上海) 86-21-34970699
胜特力电子(深圳) 86-755-83298787
Http://www.100y.com.tw

(2) Measuring method of life of the main circuit capacitor

- If the value of capacitor capacity measured before shipment is considered as 100%, *Pr. 255* bit1 is turned on when the measured value falls below 85%.
- Measure the capacitor capacity according to the following procedure and check the deterioration level of the capacitor capacity.
  1) Check that the motor is connected and at a stop.
  2) Set "1" (measuring start) in *Pr. 259*
  3) Switch power off. The inverter applies DC voltage to the motor to measure the capacitor capacity while the inverter is off.
  4) After confirming that the LED of the operation panel is off, power on again.
  5) Check that "3" (measuring completion) is set in *Pr. 259*, then read *Pr .255* and check the life of the main circuit capacitor.

REMARKS

- The life of the main circuit capacitor can not be measured in the following conditions.
  (a) FR-HC, MT-HC, FR-CV, FR-BU, MT-RC, MT-BU5 or BU is connected.
  (b) Terminal R1/L11, S1/L21 or DC power supply is connected to the terminals P/+ and N/–.
  (c) Switch power on during measuring.
  (d) The motor is not connected to the inverter.
  (e) The motor is running.(The motor is coasting.)
  (f) The motor capacity is two rank smaller as compared to the inverter capacity.
  (g) The inverter is at an alarm stop or an alarm occurred while power is off.
  (h) The inverter output is shut off with the MRS signal.
  (i) The start command is given while measuring.
- Operating environment:Ambient temperature (annual average 40°C (free from corrosive gas, flammable gas, oil mist, dust and dirt))
  Output current (80% of the rated current of Mitsubishi standard 4P motor)

POINT

For the accurate life measuring of the main circuit capacitor, perform after more than 3h passed since the turn off of the power as it is affected by the capacitor temperature.

5.1.5 Cleaning

Always run the inverter in a clean status.
When cleaning the inverter, gently wipe dirty areas with a soft cloth immersed in neutral detergent or ethanol.

CAUTION

Do not use solvent, such as acetone, benzene, toluene and alcohol, as they will cause the inverter surface paint to peel off.
The display, etc. of the operation panel (FR-DU07) and parameter unit (FR-PU04/FR-PU07) are vulnerable to detergent and alcohol. Therefore, avoid using them for cleaning.

5.1.6 Replacement of parts

The inverter consists of many electronic parts such as semiconductor devices.
The following parts may deteriorate with age because of their structures or physical characteristics, leading to reduced performance or fault of the inverter. For preventive maintenance, the parts must be replaced periodically.
Use the life check function as a guidance of parts replacement.

Part Name	Standard Replacement Interval *1	Description
Cooling fan	10 years	Replace (as required)
Main circuit smoothing capacitor	10 years *2	Replace (as required)
On-board smoothing capacitor	10 years	Replace the board (as required)
Relays	–	as required
Fuse (160K or more)	10 years	Replace the fuse (as required)

*1 Replacement years for when the yearly average ambient temperature is 40°C (without corrosive gas, flammable gas, oil mist, dust and dirt etc)
*2 Output current : equivalent to rating current of the Mitsubishi standard motor (4 poles)

CAUTION

For parts replacement, consult the nearest Mitsubishi FA Center.

(1) Cooling fan

The replacement interval of the cooling fan used for cooling the parts generating heat such as the main circuit semiconductor is greatly affected by the ambient temperature. When unusual noise and/or vibration is noticed during inspection, the cooling fan must be replaced immediately.

CAUTION

For parts replacement, consult the nearest Mitsubishi FA Center.

Inverter Type		Fan Type	Units
A720	1.5K to 3.7K	MMF-06F24ES-RP1 BKO-CA1638H01	1
	5.5K to 11K	MMF-08D24ES-RP1 BKO-CA1639H01	2
	15K, 18.5K	MMF-12D24DS-RP1 BKO-CA1619H01	1
	22K	MMF-06F24ES-RP1 BKO-CA1638H01	1
		MMF-12D24DS-RP1 BKO-CA1619H01	1
	30K	MMF-09D24TS-RP1 BKO-CA1640H01	2
	37K, 45K	MMF-12D24DS-RP1 BKO-CA1619H01	2
	55K to 90K	MMF-12D24DS-RP1 BKO-CA1619H01	3
A740	2.2K, 3.7K	MMF-06F24ES-RP1 BKO-CA1638H01	1
	5.5K to 15K	MMF-08D24ES-RP1 BKO-CA1639H01	2
	18.5K, 22K	MMF-12D24DS-RP1 BKO-CA1619H01	1
	30K	MMF-09D24TS-RP1 BKO-CA1640H01	2
	37K to 55K	MMF-12D24DS-RP1 BKO-CA1619H01	2
	75K to 132K		3
	160K, 185K	9LB1424H5H03	3
	220K to 280K		4
	315K, 355K		5
	400K to 500K	9LB1424S5H03	6

The FR-A720-0.4K, 0.75K, FR-A740-0.4K to 1.5K are not provided with a cooling fan.

勝 特 力 材 料 886-3-5753170
胜特力电子(上海) 86-21-34970699
胜特力电子(深圳) 86-755-83298787
Http://www.100y.com.tw

• Removal (FR-A720-1.5K to 90K, FR-A740-2.2K to 132K)

1) Push the hooks from above and remove the fan cover.

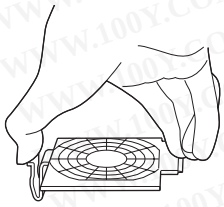

FR-A720-1.5K to 3.7K
FR-A740-2.2K, 3.7K

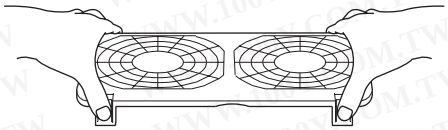

FR-A720-5.5K to 22K
FR-A740-5.5K to 22K

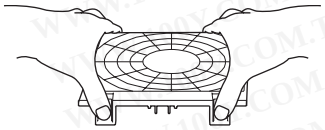

FR-A720-30K or more
FR-A740-30K to 132K

2) Disconnect the fan connectors.

3) Remove the fan.

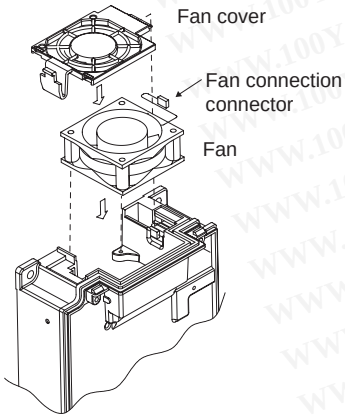

FR-A720-1.5K to 3.7K
FR-A740-2.2K, 3.7K

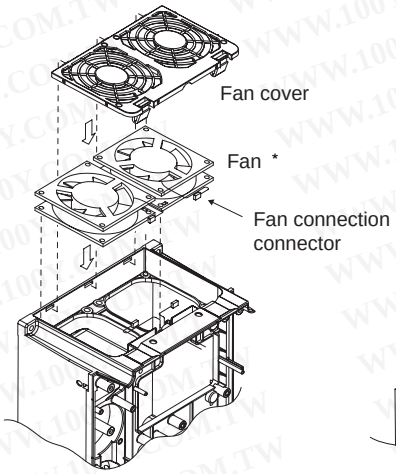

FR-A720-5.5K to 22K
FR-A740-5.5K to 22K

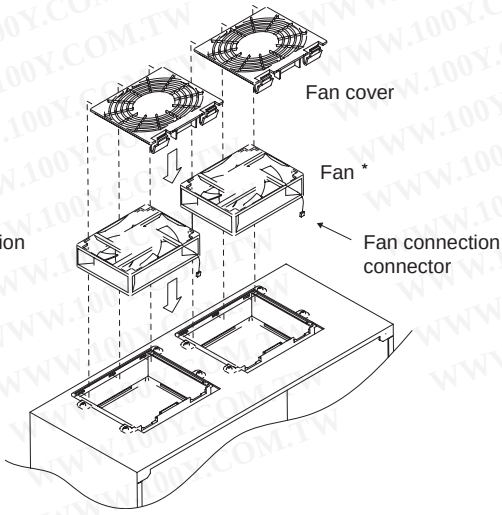

FR-A720-30K or more
FR-A740-30K to 132K

* The number of cooling fans differs according to the inverter capacity. (Refer to the table above)

• Reinstallation (FR-A720-1.5K to 90K, FR-A740-2.2K to 132K)

1) After confirming the orientation of the fan, reinstall the fan so that the arrow on the left of "AIR FLOW" faces up.

↑ AIR FLOW

<Fan side face>

CAUTION

Installing the fan in the opposite air flow direction can cause the inverter life to be shorter.

2) Reconnect the fan connectors.
When wiring, use care to avoid the cables being caught by the fan.

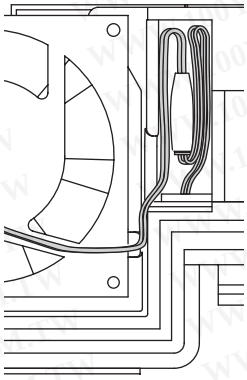

FR-A720-1.5K to 3.7K
FR-A740-2.2K, 3.7K

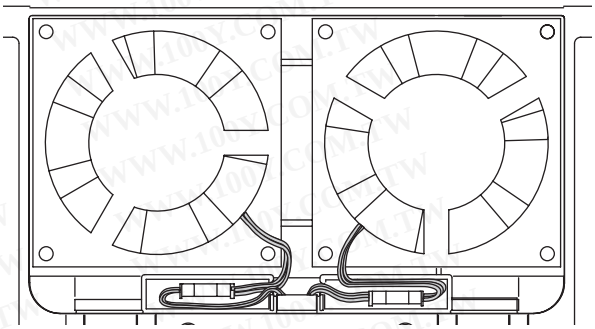

FR-A720-5.5K to 11K
FR-A740-5.5K to 15K

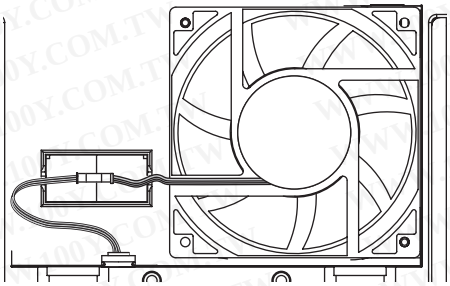

FR-A720-15K, 18.5K
FR-A740-18.5K, 22K

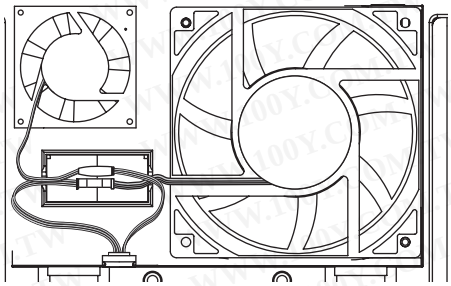

FR-A720-22K

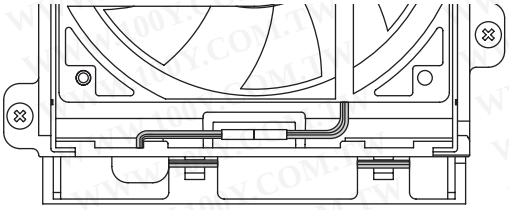

FR-A720-30K or more
FR-A740-30K to 132K

勝 特 力 材 料 886-3-5753170
胜特力电子(上海) 86-21-34970699
胜特力电子(深圳) 86-755-83298787
Http://www.100y.com.tw

3) Reinstall the fan cover.

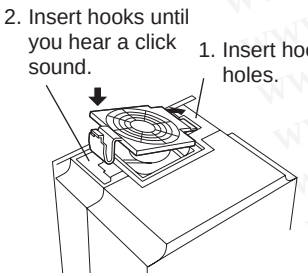

FR-A720-1.5K to 3.7K
FR-A740-2.2K, 3.7K

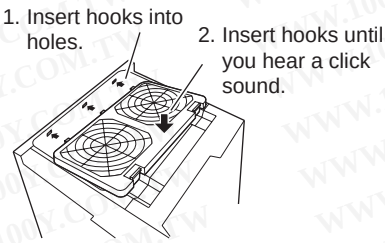

FR-A720-5.5K to 22K
FR-A740-5.5K to 22K

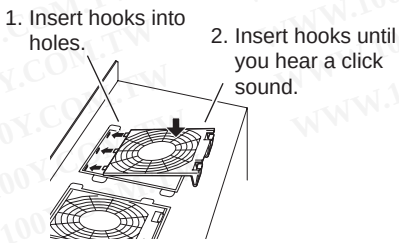

FR-A720-30K or more
FR-A740-30K to 132K

• Removal (FR-A740-160K or more)

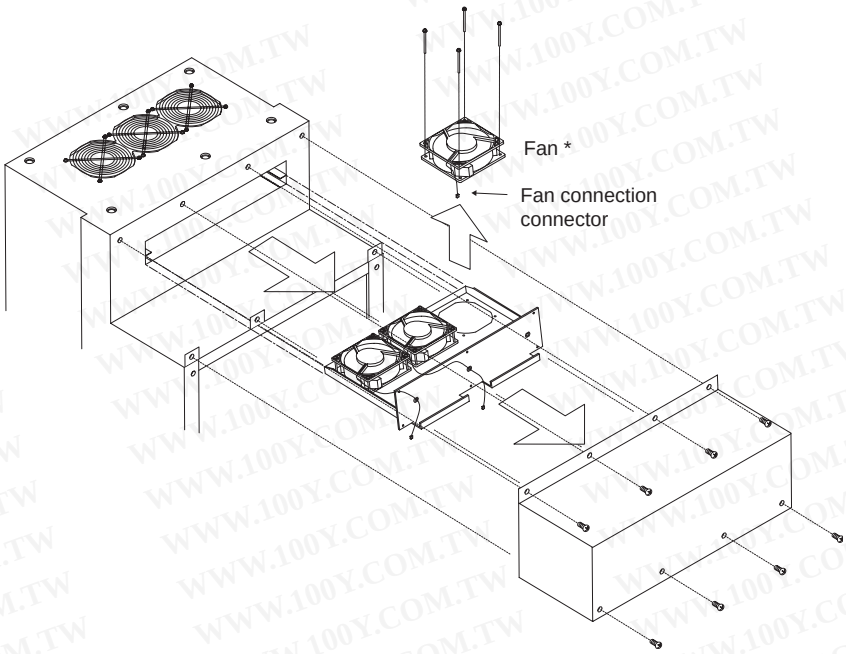

* The number of cooling fans differs according to the inverter capacity. *(Refer to page 153)*

• Reinstallation (FR-A740-160K or more)

1) After confirming the orientation of the fan, reinstall the fan so that the arrow on the left of "AIR FLOW" faces up.

↑ AIR FLOW

<Fan side face>

CAUTION

Installing the fan in the opposite air flow direction can cause the inverter life to be shorter.

2) Install fans referring to the above figure.

(2) Replacement procedure of the cooling fan when using a heatsink protrusion attachment (FR-A7CN)

When replacing a cooling fan, remove a top cover of the heatsink protrusion attachment and perform replacement. After replacing the cooling fan, replace the top cover in the original position.

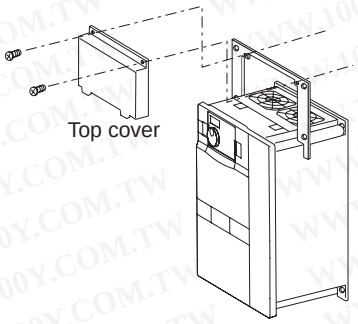

勝 特 力 材 料 886-3-5753170
胜特力电子(上海) 86-21-34970699
胜特力电子(深圳) 86-755-83298787
Http://www.100y.com.tw

(3) Smoothing capacitors

A large-capacity aluminum electrolytic capacitor is used for smoothing in the main circuit DC section, and an aluminum electrolytic capacitor is used for stabilizing the control power in the control circuit. Their characteristics are deteriorated by the adverse effects of ripple currents, etc.
The replacement intervals greatly vary with the ambient temperature and operating conditions. When the inverter is operated in air-conditioned, normal environment conditions, replace the capacitors about every 10 years.
The appearance criteria for inspection are as follows:
1) Case: Check the side and bottom faces for expansion
2) Sealing plate: Check for remarkable warp and extreme crack.
3) Check for external crack, discoloration, fluid leakage, etc. Judge that the capacitor has reached its life when the measured capacitance of the capacitor reduced below 80% of the rating.

Refer to page 152 to perform the life check of the main circuit capacitor.

(4) Relays

To prevent a contact fault, etc., relays must be replaced according to the cumulative number of switching times (switching life).

5.1.7 Inverter replacement

The inverter can be replaced with the control circuit wiring kept connected. Before replacement, remove the wiring cover of the inverter.
1) Loosen the two installation screws in both ends of the control circuit terminal block. (These screws cannot be removed.) Pull down the terminal block from behind the control circuit terminals.

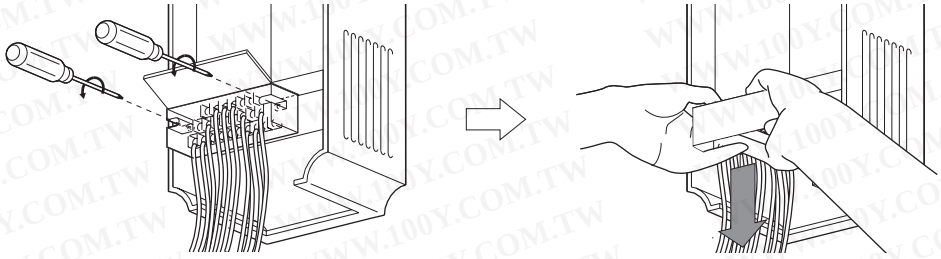

2) Using care not to bend the pins of the inverter's control circuit connector, reinstall the control circuit terminal block and fix it with the mounting screws.

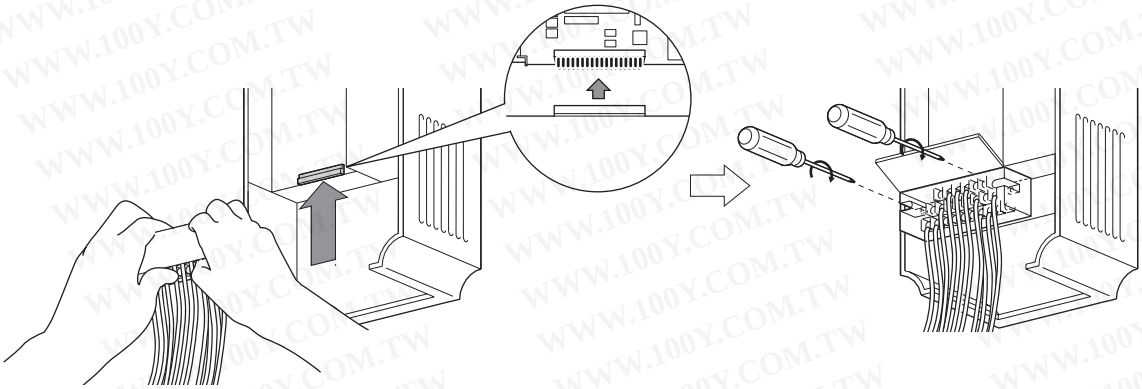

CAUTION

Before starting inverter replacement, switch power off, wait for at least 10 minutes, and then check the voltage with a tester and such to ensure safety.

勝 特 力 材 料 886-3-5753170
胜特力电子(上海) 86-21-34970699
胜特力电子(深圳) 86-755-83298787
Http://www.100y.com.tw

6 SPECIFICATIONS

6.1 Rating

6.1.1 Inverter rating

●200V class

Type FR-A720-□□K			0.4	0.75	1.5	2.2	3.7	5.5	7.5	11	15	18.5	22	30	37	45	55	75	90
Applicable motor capacity (kW) *1			0.4	0.75	1.5	2.2	3.7	5.5	7.5	11	15	18.5	22	30	37	45	55	75	90
Output	Rated capacity (kVA) *2		1.1	1.9	3.1	4.2	6.7	9.2	12.6	17.6	23.3	29	34	44	55	67	82	110	132
	Rated current (A) *3		3	5	8	11	17.5	24	33	46	61	76	90	115	145	175	215	288 (245)	346 (294)
	Overload current rating *4		150% 60s, 200% 3s (inverse time characteristics) ambient temperature 50°C																
	Voltage *5		Three-phase 200 to 240V																
	Regenerative braking torque	Maximum value/ permissible duty	150% torque/ 3%ED			100% torque/ 3%ED		100% torque/ 2%ED		20% torque/ continuous *6				20% torque/ continuous				10% torque/ continuous	
Power supply	Rated input AC voltage/frequency		Three-phase 200 to 220V 50Hz, 200 to 240V 60Hz																
	Permissible AC voltage fluctuation		170 to 242V 50Hz,170 to 264V 60Hz																
	Permissible frequency fluctuation		±5%																
	Power supply capacity (kVA) *7		1.5	2.5	4.5	5.5	9	12	17	20	28	34	41	52	66	80	100	110	132
Protective structure (JEM 1030) *9			Enclosed type (IP20) *8											Open type (IP00)					
Cooling system			Self-cooling	Forced air cooling															
Approx. mass (kg)			1.9	2.3	3.8	3.8	3.8	7.1	7.1	7.5	13	13	14	23	35	35	58	70	70

*1. The applicable motor capacity indicated is the maximum capacity applicable for use of the Mitsubishi 4-pole standard motor.

*2. The rated output capacity indicated assumes that the output voltage is 220V.

*3. When operating the inverter of 75K or more with a value larger than 2kHz set in *Pr. 72 PWM frequency selection*, the rated output current is the value in parenthesis.

*4. The % value of the overload current rating indicates the ratio of the overload current to the inverter's rated output current. For repeated duty, allow time for the inverter and motor to return to or below the temperatures under 100% load.

*5. The maximum output voltage does not exceed the power supply voltage. The maximum output voltage can be changed within the setting range. However, the pulse voltage value of the inverter output side voltage remains unchanged at about $\sqrt{2}$ that of the power supply.

*6. For the 11K to 22K capacities, using the dedicated external brake resistor (FR-ABR) will achieve the performance of 100% torque/6%ED.

*7. The power supply capacity varies with the value of the power supply side inverter impedance (including those of the input reactor and cables).

*8. When the hook of the inverter front cover is cut off for installation of the plug-in option, the inverter changes to an open type (IP00).

*9. FR-DU07:IP40 (except for the PU connector)

勝 特 力 材 料 886-3-5753170
胜特力电子(上海) 86-21-34970699
胜特力电子(深圳) 86-755-83298787
Http://www.100y.com.tw

●400V class

Type FR-A740-□□K		0.4	0.75	1.5	2.2	3.7	5.5	7.5	11	15	18.5	22	30	37	45	55
Applicable motor capacity (kW) *1		0.4	0.75	1.5	2.2	3.7	5.5	7.5	11	15	18.5	22	30	37	45	55
Output	Rated capacity (kVA) *2	1.1	1.9	3	4.6	6.9	9.1	13	17.5	23.6	29	32.8	43.4	54	65	84
	Rated current (A)	1.5	2.5	4	6	9	12	17	23	31	38	44	57	71	86	110
	Overload current rating *4	150% 60s, 200% 3s (inverse time characteristics) ambient temperature 50°C														
	Voltage *5	Three-phase 380 to 480V														
	Regenerative braking torque / Maximum value/ permissible duty	100% torque/2%ED							20% torque/continuous *6				20% torque/continuous			
Power supply	Rated input AC voltage/frequency	Three-phase 380 to 480V 50Hz/60Hz														
	Permissible AC voltage fluctuation	323 to 528V 50Hz/60Hz														
	Permissible frequency fluctuation	±5%														
	Power supply capacity (kVA) *7	1.5	2.5	4.5	5.5	9	12	17	20	28	34	41	52	66	80	100
Protective structure (JEM 1030) *9		Enclosed type (IP20) *8											Open type (IP00)			
Cooling system		Self-cooling			Forced air cooling											
Approx. mass (kg)		3.5	3.5	3.5	3.5	3.5	6.5	6.5	7.5	7.5	13	13	23	35	35	37

Type FR-A740-□□K		75	90	110	132	160	185	220	250	280	315	355	400	450	500
Applicable motor capacity (kW) *1		75	90	110	132	160	185	220	250	280	315	355	400	450	500
Output	Rated capacity (kVA) *2	110	137	165	198	248	275	329	367	417	465	521	587	660	733
	Rated current (A)*3	144 (122)	180 (153)	216 (184)	260 (221)	325 (276)	361 (307)	432 (367)	481 (409)	547 (465)	610 (519)	683 (581)	770 (655)	866 (736)	962 (818)
	Overload current rating *4	150% 60s, 200% 3s (inverse time characteristics) ambient temperature 50°C													
	Voltage*5	Three-phase 380 to 480V													
	Regenerative braking torque / Maximum value/ permissible duty	10% torque/continuous													
Power supply	Rated input AC voltage/frequency	Three-phase 380 to 480V 50Hz/60Hz													
	Permissible AC voltage fluctuation	323 to 528V 50Hz/60H													
	Permissible frequency fluctuation	±5%													
	Power supply capacity (kVA) *7	110	137	165	198	248	275	329	367	417	465	521	587	660	733
Protective structure (JEM 1030) *9		Open type (IP00)													
Cooling system		Forced air cooling													
Approx. mass (kg)		50	57	72	72	110	110	175	175	175	260	260	370	370	370

*1. The applicable motor capacity indicated is the maximum capacity applicable for use of the Mitsubishi 4-pole standard motor.
*2. The rated output capacity indicated assumes that the output voltage is 440V.
*3. When operating the inverter of 75K or more with a value larger than 2kHz set in *Pr. 72 PWM frequency selection*, the rated output current is the value in parenthesis.
*4. The % value of the overload current rating indicates the ratio of the overload current to the inverter's rated output current. For repeated duty, allow time for the inverter and motor to return to or below the temperatures under 100% load.
*5. The maximum output voltage does not exceed the power supply voltage. The maximum output voltage can be changed within the setting range. However, the pulse voltage value of the inverter output side voltage remains unchanged at about $\sqrt{2}$ that of the power supply.
*6. For the 11K to 22K capacities, using the dedicated external brake resistor (FR-ABR) will achieve the performance of 100% torque/6%ED.
*7. The power supply capacity varies with the value of the power supply side inverter impedance (including those of the input reactor and cables).
*8. When the hook of the inverter front cover is cut off for installation of the plug-in option, the inverter changes to an open type (IP00).
*9. FR-DU07:IP40 (except for the PU connector)

勝 特 力 材 料 886-3-5753170
胜特力电子(上海) 86-21-34970699
胜特力电子(深圳) 86-755-83298787
Http://www.100y.com.tw

6.1.2 Motor rating

(1) SF-V5RU

●200V class (Mitsubishi dedicated motor [SF-V5RU (1500r/min series)])

Motor type SF-V5RU□□K		1	2	3	5	7	11	15	18	22	30	37	45	55
Applicable inverter type FR-A720-□□K		2.2	3.7	5.5	7.5	11	15	18.5	22	30	37	45	55	75
Rated output (kW)		1.5	2.2	3.7	5.5	7.5	11	15	18.5	22	30	37	45	55
Rated torque (N•m)		9.55	14.1	23.6	35.0	47.7	70.0	95.5	118	140	191	235	286	350
Maximum torque 150% 60s (N•m)		14.3	21.1	35.4	52.4	71.6	105	143	176	211	287	353	429	525
Rated speed (r/min)		1500												
Maximum speed (r/min)		3000 *1												2400
Frame No.		90L	100L	112M	132S	132M	160M	160L	180M	180M	200L	200L	200L	225S
Inertia moment J ($\times 10^{-4}$kg•m^2)		67.5	105	175	275	400	750	875	1725	1875	3250	3625	3625	6850
Noise *4		75dB or less									80dB or less			85dB or less
Cooling fan (with thermal protector)	Voltage	Single-phase 200V/50Hz Single-phase 200V to 230V/60Hz					Three-phase 200V/50Hz Three-phase 200 to 230V/60Hz							
	Input *2	36/55W (0.26/0.32A)			22/28W (0.11/0.13A)		55/71W (0.39/0.39A)				100/156W (0.47/0.53A)			85/130W (0.46/0.52A)
Ambient temperature, humidity		-10 to +40°C (non-freezing), 90%RH or less (non-condensing)												
Structure (Protective structure)		Totally enclosed forced draft system (Motor: IP44, cooling fan: IP23S) *3												
Detector		Encoder 2048P/R, A phase, B phase, Z phase +12VDC power supply												
Equipment		Encoder, thermal protector, fan												
Heat resistance class		F												
Vibration rank		V10												
Approx. mass (kg)		24	33	41	52	62	99	113	138	160	238	255	255	320

●400V class (Mitsubishi dedicated motor [SF-V5RUH (1500r/min series)])

Motor type SF-V5RUH□□K		1	2	3	5	7	11	15	18	22	30	37	45	55
Applicable inverter type FR-A720-□□K		2.2	2.2	3.7	7.5	11	15	18.5	22	30	37	45	55	75
Rated output (kW)		1.5	2.2	3.7	5.5	7.5	11	15	18.5	22	30	37	45	55
Rated torque (N•m)		9.55	14.1	23.6	35.0	47.7	70.0	95.5	118	140	191	235	286	350
Maximum torque 150% 60s (N•m)		14.3	21.1	35.4	52.4	71.6	105	143	176	211	287	353	429	525
Rated speed (r/min)		1500												
Maximum speed (r/min)		3000 *1												2400
Frame No.		90L	100L	112M	132S	132M	160M	160L	180M	180M	200L	200L	200L	225S
Inertia moment J ($\times 10^{-4}$kg•m^2)		67.5	105	175	275	400	750	875	1725	1875	3250	3625	3625	6850
Noise *4		75dB or less									80dB or less			85dB or less
Cooling fan (with thermal protector)	Voltage	Single-phase 200V/50Hz Single-phase 200V to 230V/60Hz					Three-phase 380 to 400V/50Hz Three-phase 400 to 460V/60Hz							
	Input *2	36/55W (0.26/0.32A)			22/28W (0.11/0.13A)		55/71W (0.19/0.19A)				100/156W (0.27/0.30A)			85/130W (0.23/0.26A)
Ambient temperature, humidity		-10 to +40°C (non-freezing), 90%RH or less (non-condensing)												
Structure (Protective structure)		Totally enclosed forced draft system (Motor: IP44, cooling fan: IP23S) *3												
Detector		Encoder 2048P/R, A phase, B phase, Z phase +12VDC power supply												
Equipment		Encoder, thermal protector, fan												
Heat resistance class		F												
Vibration rank		V10												
Approx. mass (kg)		24	33	41	52	62	99	113	138	160	238	255	255	320

*1 A dedicated motor of 3.7kW or less can be run at the maximum speed of 3600 r/min. Consult our sales office when using the motor at the maximum speed.
*2 Power (current) at 50Hz/60Hz.
*3 Since a motor with brake has a window for gap check, the protective structure of both the cooling fan section and brake section is IP20. S of IP23S is an additional code indicating the condition that a cooling fan is not operated.
*4 The value when high carrier frequency is set (*Pr.72* = 6, *Pr.240* = 0).

勝 特 力 材 料 886-3-5753170
胜特力电子(上海) 86-21-34970699
胜特力电子(深圳) 86-755-83298787
Http://www.100y.com.tw

(2) SF-THY

200V class	Motor type			SF-THY					
	Applicable Inverter FR-A720-□□K			90					
	Rated output(kW)			75					
	Rated torque (kgf•m)			48.7					
	(N•m)			477					
	Maximum torque (kgf•m) 150%60s			73.0					
	(N•m)			715					
	Rated speed (r/min)			1500					
	Maximum speed (r/min)			2400					
	Frame No.			250MD					
	Inertia moment J (kg•m^2)			1.1					
	Noise			90dB					
	Cooling fan	Voltage		Three-phase, 200V/50Hz, 200V/60Hz, 220V/60Hz (400V class cooling fan is available upon order)					
		Input (W)		750					
400V class	Motor type			SF-THY					
	Applicable Inverter FR-A740-□□K			90	110	132	160	185	220	280
	Rated output (kW)			75	90	110	132	160	200	250
	Rated torque (kgf•m)			48.7	58.4	71.4	85.7	103.9	129.9	162.3
	(N•m)			477	572	700	840	1018	1273	1591
	Maximum torque (kgf•m) 150%60s			73.0	87.6	107.1	128.5	155.8	194.8	243.4
	(N•m)			715	858	1050	1260	1527	1909	2386
	Rated speed (r/min)			1500						
	Maximum speed (r/min)			2400	1800					
	Frame No.			250MD	250MD	280MD	280MD	280MD	280L	315H
	Inertia moment J (kg•m^2)			1.1	1.7	2.3	2.3	4.0	3.8	5.0
	Noise			90dB			95dB			
	Cooling fan	Voltage		Three-phase, 200V/50Hz, 200V/60Hz, 220V/60Hz (400V class cooling fan is available upon order)						
		Input (W)	50Hz	400	400	400	400	400	750	750
			60Hz	750	750	750	750	750	1500	1500

勝 特 力 材 料 886-3-5753170
胜特力电子(上海) 86-21-34970699
胜特力电子(深圳) 86-755-83298787
Http://www.100y.com.tw

6.2 Common specifications

Control specifications	Control method		Soft-PWM control/high carrier frequency PWM control (selectable from among V/F control, advanced magnetic flux vector control and real sensorless vector control) / vector control (when used with option FR-A7AP)*1
	Output frequency range		0.2 to 400Hz
	Frequency setting resolution	Analog input	0.015Hz/0 to 60Hz (terminal 2, 4: 0 to 10V/12bit) 0.03Hz/0 to 60Hz (terminal 2, 4: 0 to 5V/11bit, 0 to 20mA/about 11bit, terminal 1: 0 to ±10V/12bit) 0.06Hz/0 to 60Hz (terminal 1: 0 to ±5V/11bit)
		Digital input	0.01Hz
	Frequency accuracy	Analog input	Within ±0.2% of the max. output frequency (25°C±10°C)
		Digital input	Within 0.01% of the set output frequency
	Voltage/frequency characteristics		Base frequency can be set from 0 to 400Hz Constant torque/variable torque pattern or adjustable 5 points V/F can be selected
	Starting torque		200% 0.3Hz (0.4K to 3.7K), 150% 0.3Hz (5.5K or more) (under real sensorless vector control or vector control)
	Torque boost		Manual torque boost
	Acceleration/deceleration time setting		0 to 3600s (acceleration and deceleration can be set individually), linear or S-pattern acceleration/deceleration mode, backlash measures acceleration/deceleration can be selected.
	DC injection brake		Operation frequency (0 to 120Hz), operation time (0 to 10s), operation voltage (0 to 30%) variable
	Stall prevention operation level		Operation current level can be set (0 to 220% adjustable), whether to use the function or not can be selected
	Torque limit level		Torque limit value can be set (0 to 400% variable)
Operation specifications	Frequency setting signal	Analog input	• Terminal 2, 4: 0 to 10V, 0 to 5V, 4 to 20mA can be selected • Terminal 1: -10 to +10V, -5 to +5V can be selected
		Digital input	Input using the setting dial of the operation panel or parameter unit Four-digit BCD or 16 bit binary (when used with option FR-A7AX)
	Start signal		Forward and reverse rotation or start signal automatic self-holding input (3-wire input) can be selected.
	Input signals		You can select any twelve signals using *Pr. 178 to Pr. 189 (input terminal function selection)* from among multi speed selection, remote setting, stop-on-contact, second function selection, third function selection, terminal 4 input selection, JOG operation selection, selection of automatic restart after instantaneous power failure, flying start, external thermal relay input, inverter operation enable signal (FR-HC/FR-CV connection), FR-HC connection (instantaneous power failure detection), PU operation/external inter lock signal , external DC injection brake operation start, PID control enable terminal, brake opening completion signal, PU operation/external operation switchover, load pattern selection forward rotation reverse rotation boost, V/F switching, load torque high-speed frequency, S-pattern acceleration/deceleration C switchover, pre-excitation, output stop, start self-holding selection, control mode changing, torque limit selection, start-time tuning start external input, torque bias selection 1, 2 *1, P/PI control switchover, forward rotation command, reverse rotation command, inverter reset, PTC thermistor input, PID forward reverse operation switchover, PU-NET operation switchover, NET-external operation switchover, and command source switchover, conditional position pulse train sign *1, conditional position droop pulse clear *1.
		Pulse train input	100kpps
	Operational functions		Maximum/minimum frequency setting, frequency jump operation, external thermal relay input selection, polarity reversible operation, automatic restart after instantaneous power failure operation, commercial power supply-inverter switchover operation, forward/reverse rotation prevention, remote setting, brake sequence, second function, third function, multi-speed operation, original operation continuation at instantaneous power failure, stop-on-contact control, load torque high speed frequency control, droop control, regeneration avoidance, slip compensation, operation mode selection, offline auto tuning function, online auto tuning function, PID control, computer link operation (RS-485), motor end orientation*1, machine end orientation*1, pre-excitation, notch filter, machine analyzer*1, easy gain tuning, speed feed forward, and torque bias*1
	Output signals	Operating status	You can select any signals using *Pr. 190 to Pr. 196 (output terminal function selection)* from among inverter running, up-to-frequency, instantaneous power failure/undervoltage, overload warning, output frequency (speed) detection, second output frequency (speed) detection, third output frequency (speed) detection, regenerative brake prealarm, electronic thermal relay function pre-alarm, PU operation mode, inverter operation ready, output current detection, zero current detection, PID lower limit, PID upper limit, PID forward rotation reverse rotation output, commercial power supply-inverter switchover MC1, commercial power supply-inverter switchover MC2, commercial power supply-inverter switchover MC3, orientation completion*1, brake opening request, fan fault output, heatsink overheat pre-alarm , inverter running/start command on, deceleration at an instantaneous power failure, PID control activated, during retry, PID output interruption, life alarm, alarm output 1, 2, 3 (power-off signal), power savings average value update timing, current average monitor, maintenance timer alarm, remote output, forward rotation output*1, reverse rotation output*1, low speed output, torque detection, regenerative status output *1, start-time tuning completion, in-position completion*1, minor failure output and alarm output. Open collector output (5 points), relay output (2 points) and alarm code of the inverter can be output (4 bit) from the open collector.
		When used with the FR-A7AY, FR-A7AR (option)	In addition to the above, you can select any signals using *Pr. 313 to Pr. 319 (extension output terminal function selection)* from among control circuit capacitor life, main circuit capacitor life, cooling fan life, inrush current limit circuit life. (only positive logic can be set for extension terminals of the FR-A7AR)
		Pulse train output	50kpps
		Pulse/analog output	You can select any signals using *Pr. 54 FM terminal function selection (pulse train output)* and *Pr. 158 AM terminal function selection (analog output)* from among output frequency, motor current (steady or peak value), output voltage, frequency setting, operation speed, motor torque, converter output voltage (steady or peak value), electronic thermal relay function load factor, input power, output power, load meter, motor excitation current, reference voltage output, motor load factor, power saving effect, regenerative brake duty ,PID set point, PID measured value, motor output, torque command, torque current command, and torque monitor.
Indication	PU (FR-DU07/ FR-PU07/ FR-PU04)	Operating status	Output frequency, motor current (steady or peak value), output voltage, frequency setting, running speed,motor torque, overload, converter output voltage (steady or peak value), electronic thermal relay function load factor, input power, output power, load meter, motor excitation current, cumlative energization time, actual operation time, motor load factor, cumulative power, energy saving effect, cumulative saving power, regenerative brake duty, PID set point, PID measured value, PID deviation, inverter I/O terminal monitor, input terminal option monitor*2., output terminal option monitor*2., option fitting status*3., terminal assignment status*3., torque command, torque current command, feed back pulse*1,motor output
		Alarm definition	Alarm definition is displayed during the protective function is activated, the output voltage/current/frequency/cumulative energization time right before the protection function was activated and past 8 alarm definitions are stored.
		Interactive guidance	Operation guide/trouble shooting with a help function*3.
Protective/warning function			Overcurrent during acceleration, overcurrent during constant speed, overcurrent during deceleration, overvoltage during acceleration, overvoltage during constant speed, overvoltage during deceleration, inverter protection thermal operation, motor protection thermal operation, heatsink overheat, instantaneous power failure occurrence, undervoltage, input phase failure, motor overload, output side earth (ground) fault overcurrent, output short circuit, main circuit element overheat, output phase failure, external thermal relay operation, PTC thermistor operation, option alarm, parameter error, PU disconnection, retry count excess, CPU alarm, operation panel power supply short circuit, 24VDC power output short circuit, output current detection value excess, inrush current limit circuit alarm, communication alarm (inverter), USB error, opposite rotation deceleration error, analog input error, fan fault, overcurrent stall prevention, overvoltage stall prevention, regenerative brake prealarm, electronic thermal relay function prealarm, PU stop, maintenance timer alarm*2., brake transistor alarm, parameter write error, copy operation error, operation panel lock, parameter copy alarm, speed limit indication, encoder no-signal*1, speed deviation large*1, overspeed*1, position error large*1, encoder phase error*1
Environment	Ambient Temperature		-10°C to +50°C (non-freezing)
	Ambient humidity		90%RH maximum (non-condensing)
	Storage temperature*4.		-20°C to +65°C
	Atmosphere		Indoors (without corrosive gas, flammable gas, oil mist, dust and dirt etc.)
	Altitude/vibration		Maximum 1000m above sea level, 5.9m/s^2 or less *5. (conforms to JIS C 60068-2-6)

*1. Available only when the option (FR-A7AP) is mounted
*2. Can be displayed only on the operation panel (FR-DU07).
*3. Can be displayed only on the parameter unit (FR-PU07/FR-PU04).
*4. Temperature applicable for a short period in transit, etc.
*5. 2.9m/s^2 or less for the 160K or more.

勝 特 力 材 料 886-3-5753170
胜特力电子(上海) 86-21-34970699
胜特力电子(深圳) 86-755-83298787
Http://www.100y.com.tw

勝 特 力 材 料 886-3-5753170
胜特力电子(上海) 86-21-34970699
胜特力电子(深圳) 86-755-83298787
Http://www.100y.com.tw

6.3 Outline dimension drawings

6.3.1 Inverter outline dimension drawings

● FR-A720-0.4K, 0.75K

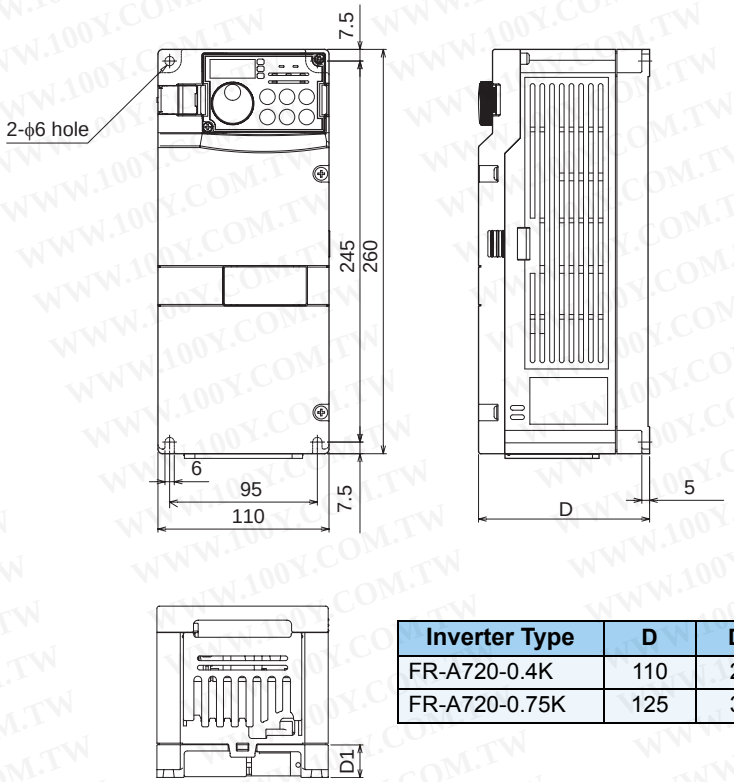

Inverter Type	D	D1
FR-A720-0.4K	110	21
FR-A720-0.75K	125	36

(Unit: mm)

●FR-A720-1.5K, 2.2K, 3.7K
●FR-A740-0.4K, 0.75K, 1.5K, 2.2K, 3.7K

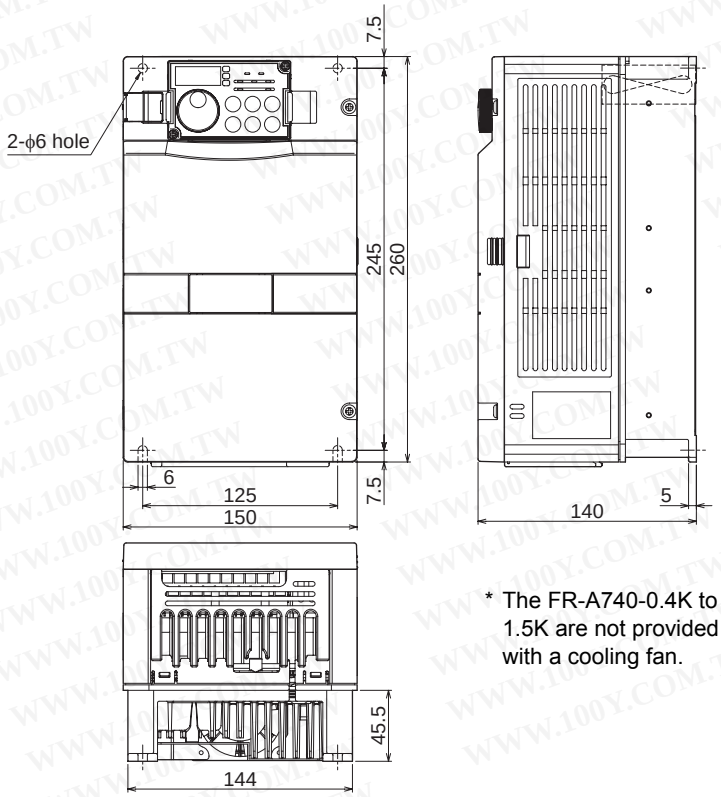

* The FR-A740-0.4K to 1.5K are not provided with a cooling fan.

(Unit: mm)

●FR-A720-5.5K, 7.5K, 11K
●FR-A740-5.5K, 7.5K, 11K, 15K

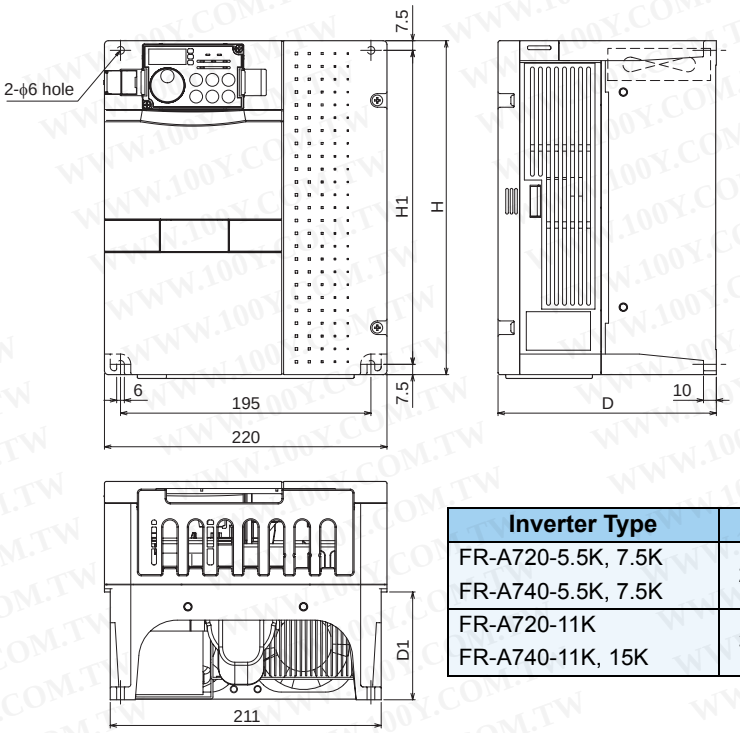

Inverter Type	H	H1	D	D1
FR-A720-5.5K, 7.5K FR-A740-5.5K, 7.5K	260	245	170	84
FR-A720-11K FR-A740-11K, 15K	300	285	190	101.5

(Unit: mm)

●FR-A720-15K, 18.5K, 22K
●FR-A740-18.5K, 22K

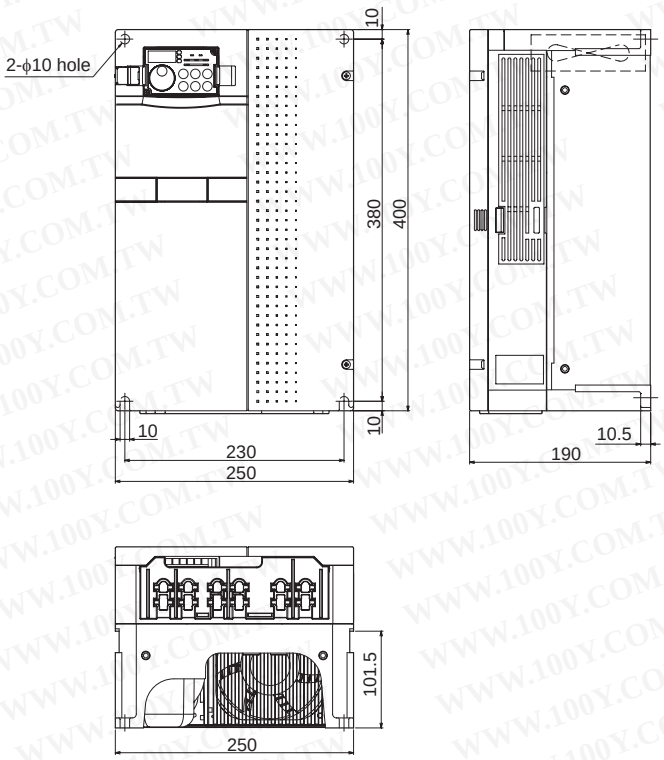

(Unit: mm)

勝 特 力 材 料 886-3-5753170
胜特力电子(上海) 86-21-34970699
胜特力电子(深圳) 86-755-83298787
Http://www.100y.com.tw

勝 特 力 材 料 886-3-5753170
胜特力电子(上海) 86-21-34970699
胜特力电子(深圳) 86-755-83298787
Http://www.100y.com.tw

●FR-A720-30K, 37K, 45K, 55K
●FR-A740-30K, 37K, 45K, 55K

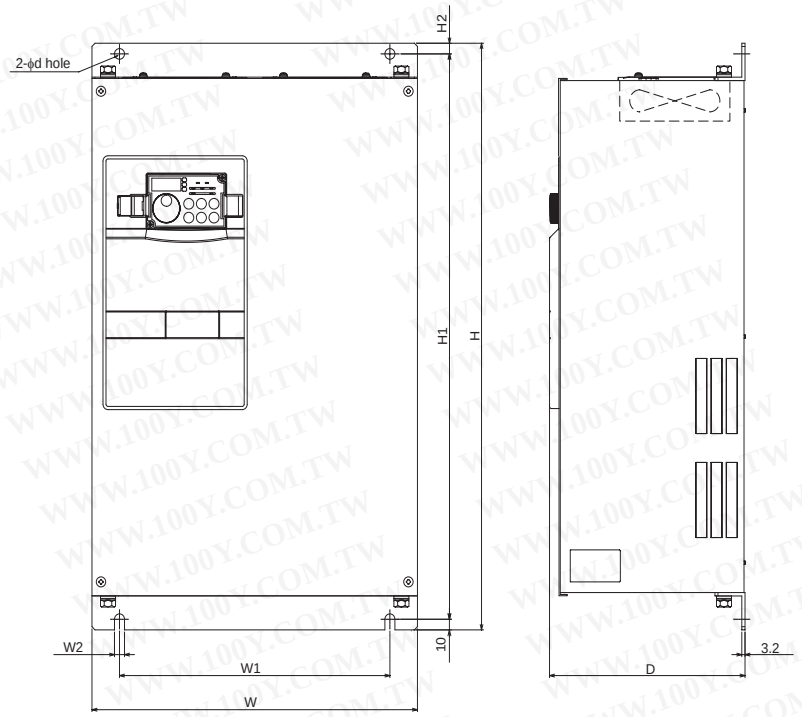

Inverter Type	W	W1	W2	H	H1	H2	d	D
FR-A720-30K FR-A740-30K	325	270	10	550	530	10	10	195
FR-A720-37K, 45K FR-A740-37K, 45K, 55K	435	380	12	550	525	15	12	250
FR-A720-55K	465	410	12	700	675	15	12	250

(Unit: mm)

●FR-A740-75K, 90K

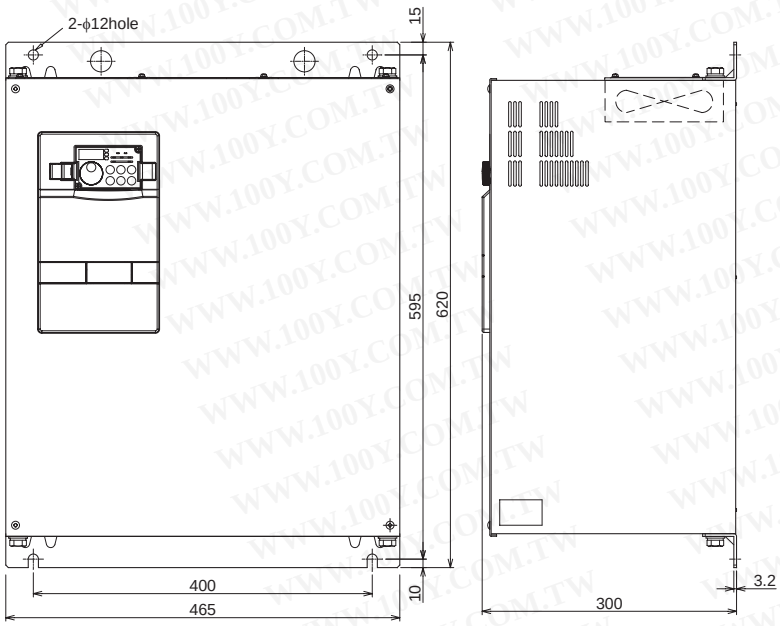

●DC reactor supplied

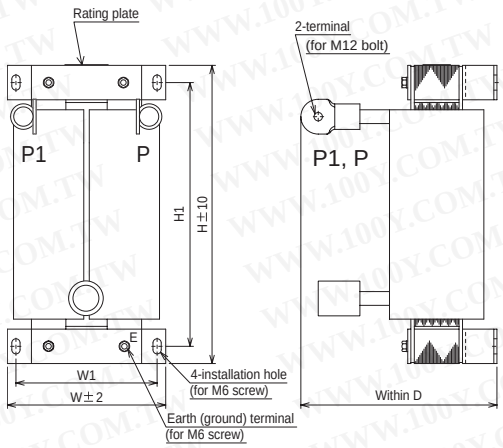

DC Reactor Type	W	W1	H	H1	D	Mass (Kg)
FR-HEL-H75K (FR-A740-75K)	140	120	320	295	185	16
FR-HEL-H90K (FR-A740-90K)	150	130	340	310	190	20

(Unit: mm)

●FR-A720-75K, 90K
●FR-A740-110K, 132K

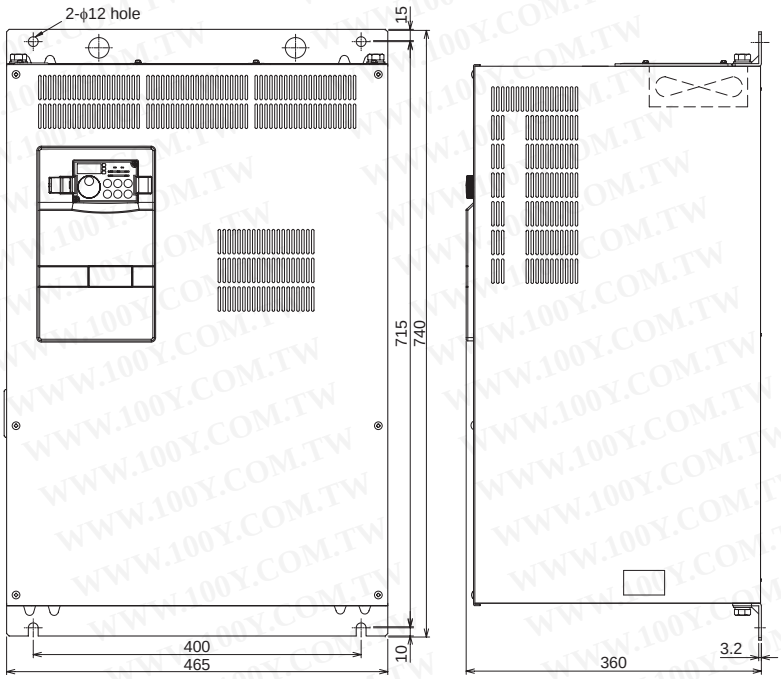

●DC reactor supplied

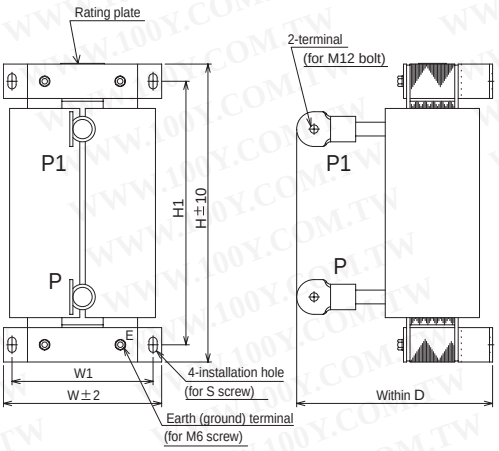

DC Reactor Type	W	W1	H	H1	D	S	Mass (kg)
FR-HEL-75K (FR-A720-75K)	150	130	340	310	190	M6	17
FR-HEL-90K (FR-A720-90K)	150	130	340	310	200	M6	19
FR-HEL-H110K (FR-A740-110K)	150	130	340	310	195	M6	22
FR-HEL-H132K (FR-A740-132K)	175	150	405	370	200	M8	26

(Unit: mm)

勝 特 力 材 料 886-3-5753170
胜特力电子(上海) 86-21-34970699
胜特力电子(深圳) 86-755-83298787
Http://www.100y.com.tw

勝 特 力 材 料 886-3-5753170
胜特力电子(上海) 86-21-34970699
胜特力电子(深圳) 86-755-83298787
Http://www.100y.com.tw

Outline dimension drawings

●FR-A740-160K, 185K

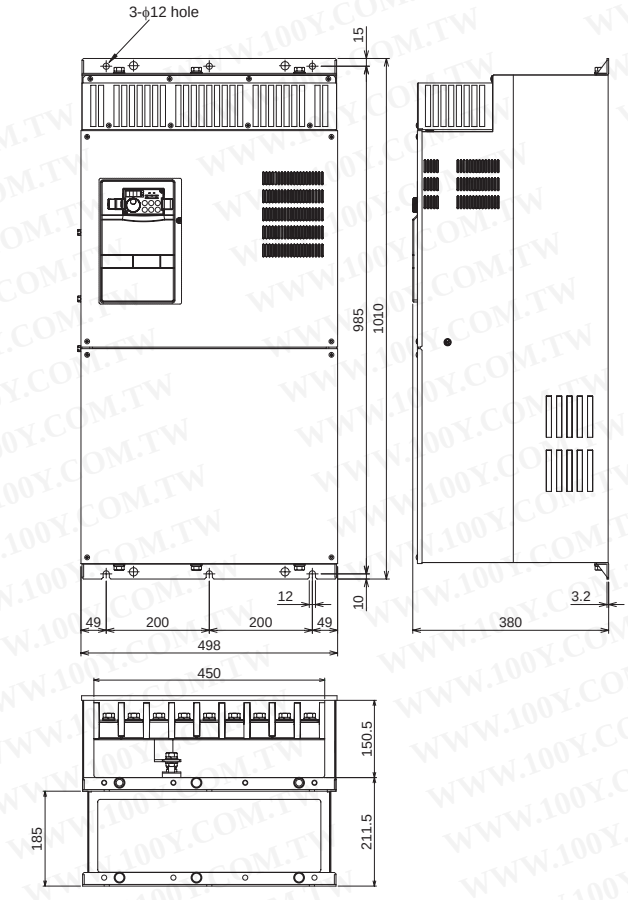

●DC reactor supplied

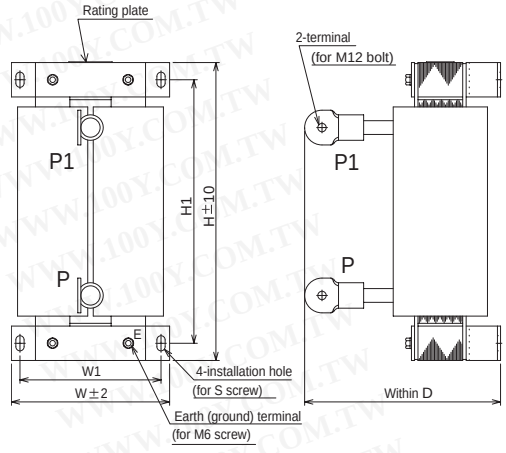

DC Reactor Type	W	W1	H	H1	D	S	Mass (kg)
FR-HEL-H160K (FR-A740-160K)	175	150	405	370	205	M8	28
FR-HEL-H185K (FR-A740-185K)	175	150	405	370	240	M8	29

(Unit: mm)

●FR-A740-220K, 250K, 280K

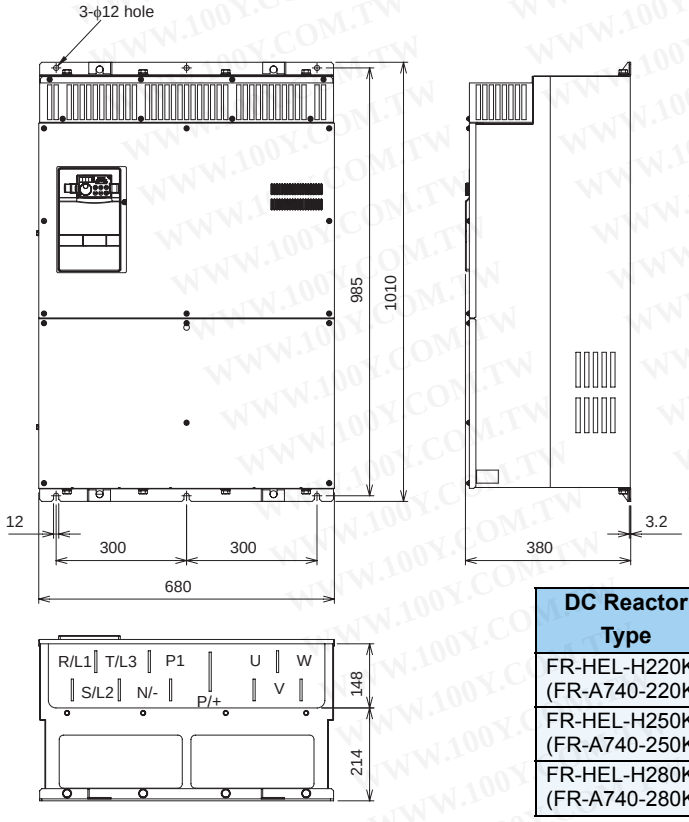

●DC reactor supplied

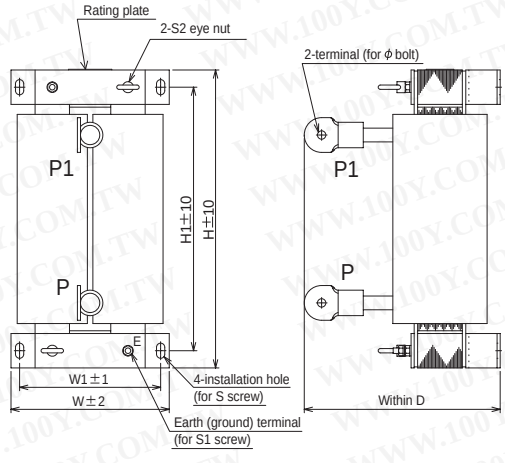

* Remove the eye nut after installation of the product.

DC Reactor Type	W	W1	H	H1	D	S	S1	S2	φ	Mass (kg)
FR-HEL-H220K (FR-A740-220K)	175	150	405	370	240	M8	M6	M6	M12	30
FR-HEL-H250K (FR-A740-250K)	190	165	440	400	250	M8	M8	M8	M12	35
FR-HEL-H280K (FR-A740-280K)	190	165	440	400	255	M8	M8	M8	M16	38

(Unit: mm)

●FR-A740-315K, 355K

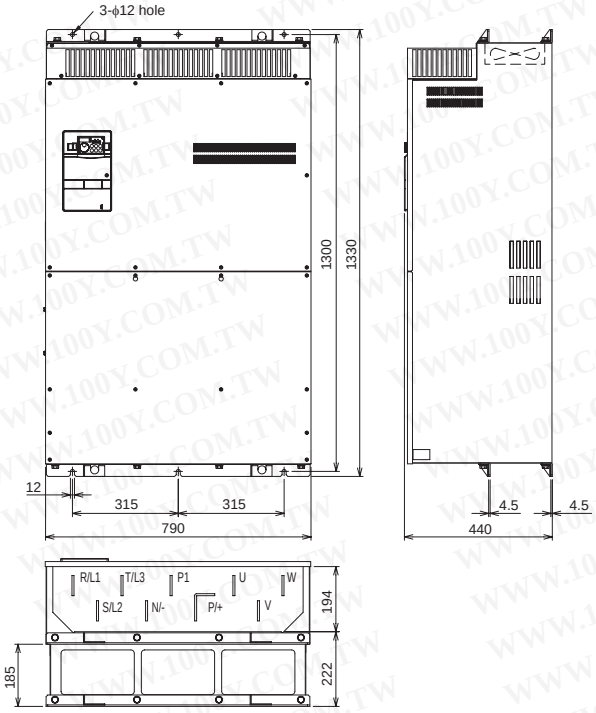

●DC reactor supplied

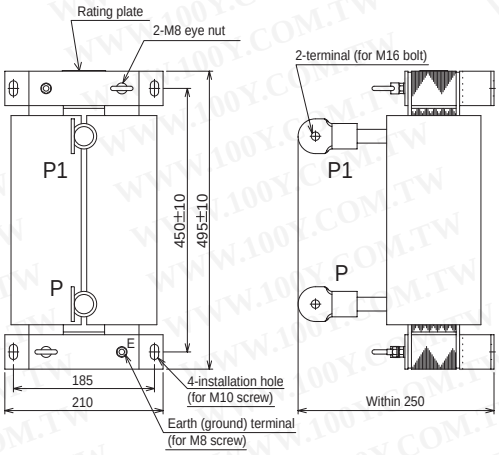

* Remove the eye nut after installation of the product.

DC Reactor Type	Mass (kg)
FR-HEL-H315K (FR-A740-315K)	42
FR-HEL-H355K (FR-A740-355K)	46

(Unit: mm)

勝 特 力 材 料 886-3-5753170
胜特力电子(上海) 86-21-34970699
胜特力电子(深圳) 86-755-83298787
Http://www.100y.com.tw

●FR-A740-400K, 450K, 500K

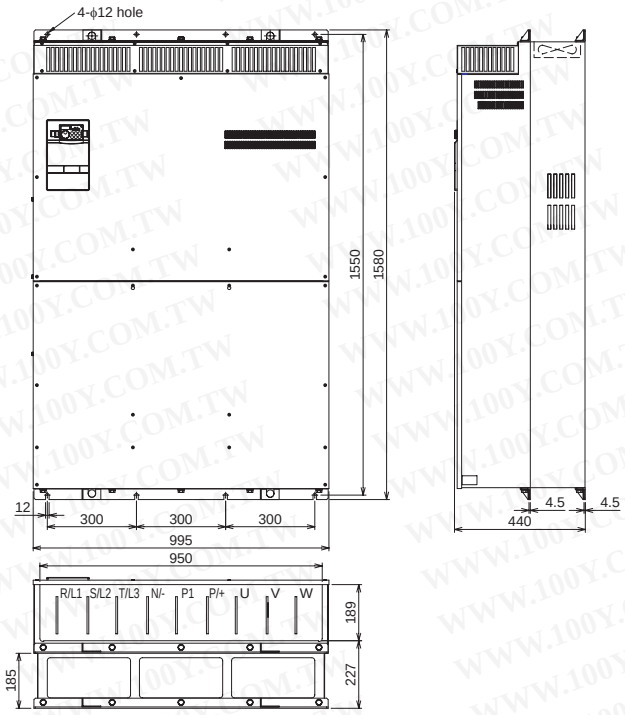

●DC reactor supplied

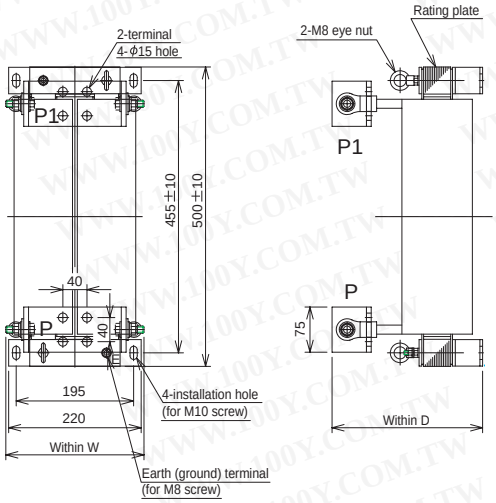

* Remove the eye nut after installation of the product.

●DC reactor supplied

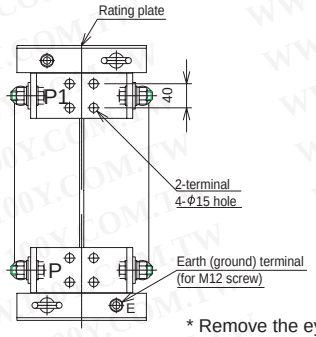

* Remove the eye nut after installation of the product.

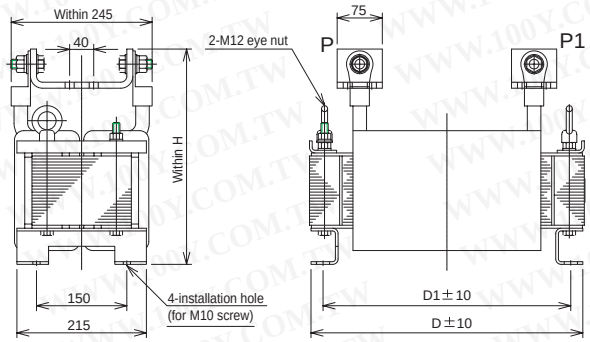

DC Reactor Type	W	D	Mass (kg)
FR-HEL-H400K (FR-A740-400K)	235	250	50
FR-HEL-H450K (FR-A740-450K)	240	270	57

DC Reactor Type	H	D	D1	Mass (kg)
FR-HEL-H500K (FR-A740-500K)	345	455	405	67

(Unit: mm)

勝 特 力 材 料 886-3-5753170
胜特力电子(上海) 86-21-34970699
胜特力电子(深圳) 86-755-83298787
Http://www.100y.com.tw

● Operation panel (FR-DU07)

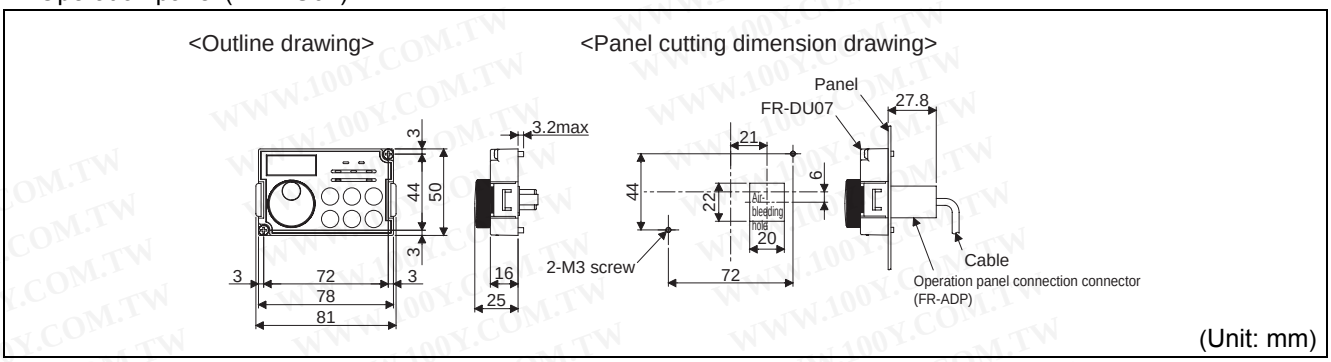

● Parameter unit (option) (FR-PU07)

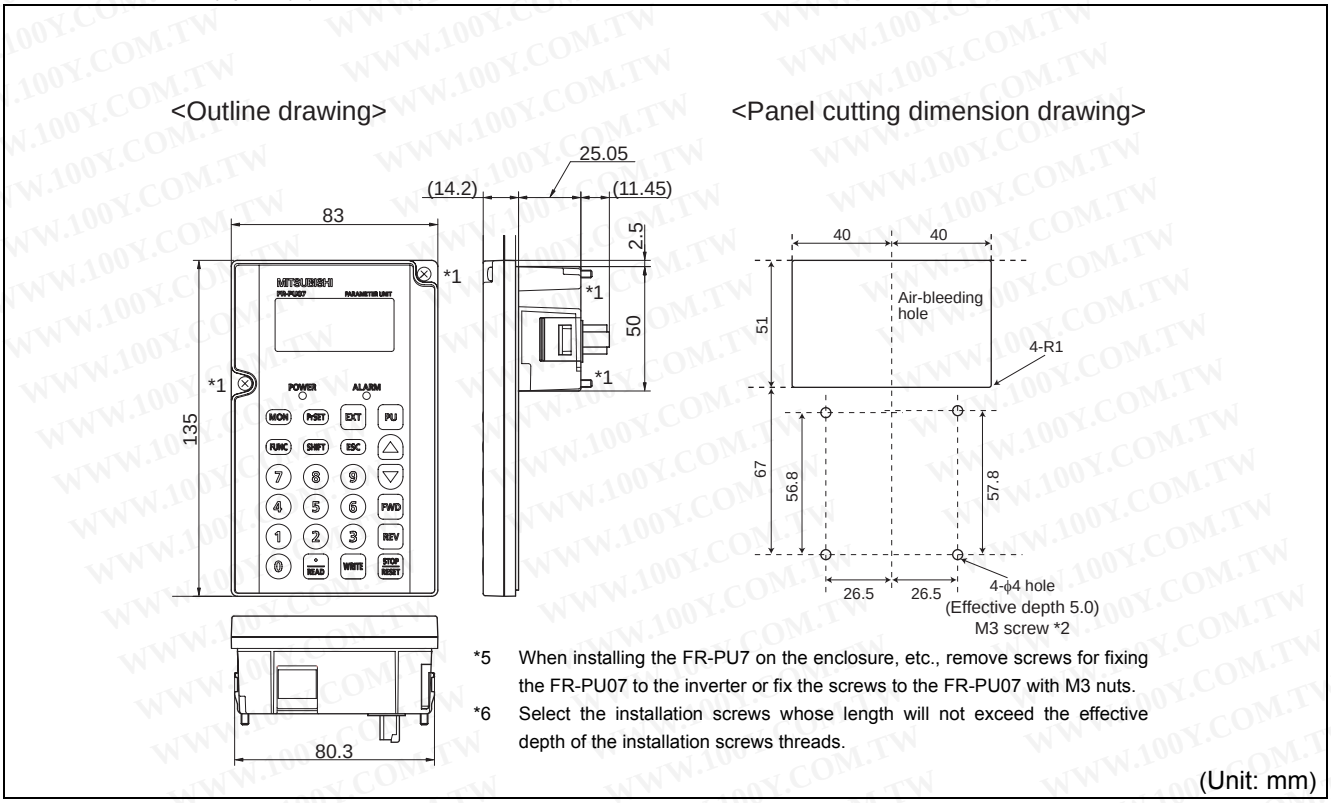

● Parameter unit (option) (FR-PU04)

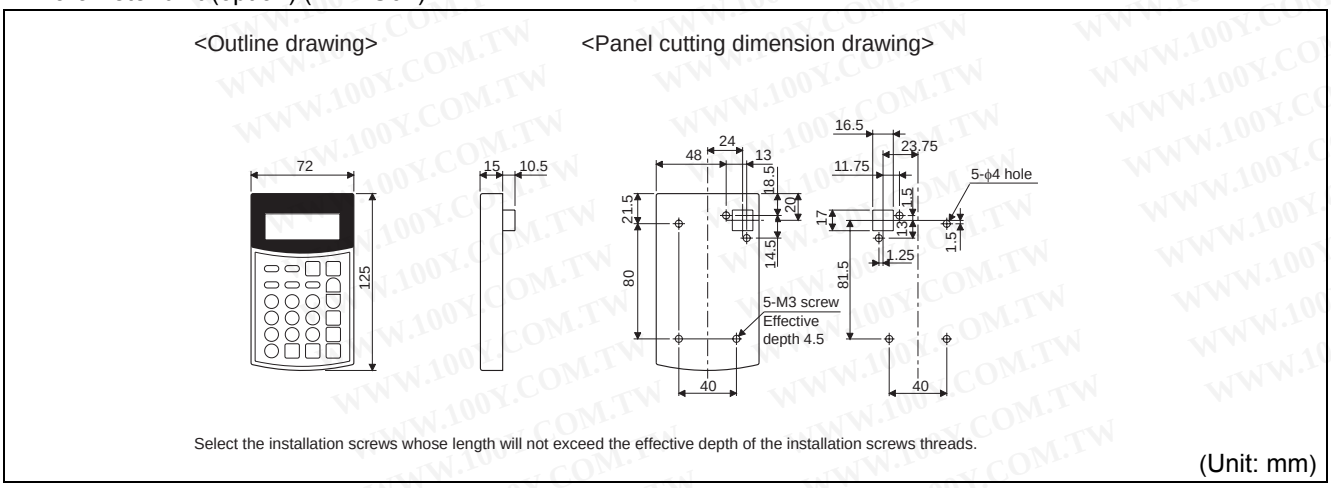

勝 特 力 材 料 886-3-5753170
胜特力电子(上海) 86-21-34970699
胜特力电子(深圳) 86-755-83298787
Http://www.100y.com.tw

勝 特 力 材 料 886-3-5753170
胜特力电子(上海) 86-21-34970699
胜特力电子(深圳) 86-755-83298787
Http://www.100y.com.tw

6.3.2 Dedicated motor outline dimension drawings

Dedicated motor (SF-V5RU(H)) outline dimension drawings (1500r/min series) (standard horizontal type)

SF-V5RU(H) 1K

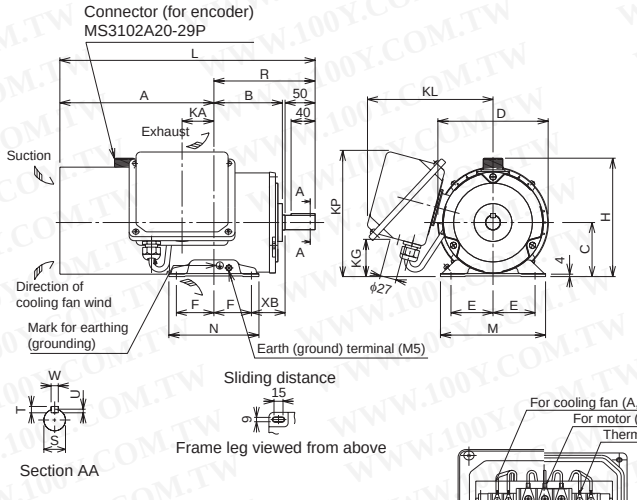

SF-V5RU(H) 2K, 3K, 5K, 7K

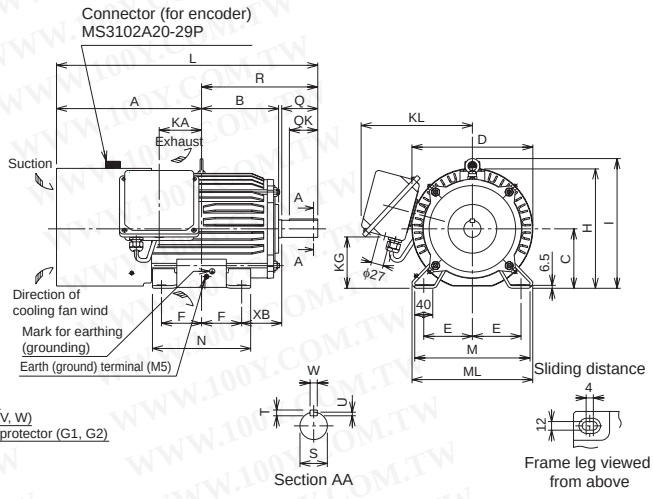

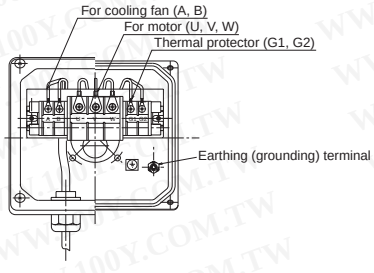

SF-V5RU(H) 11K, 15K, 18K, 22K

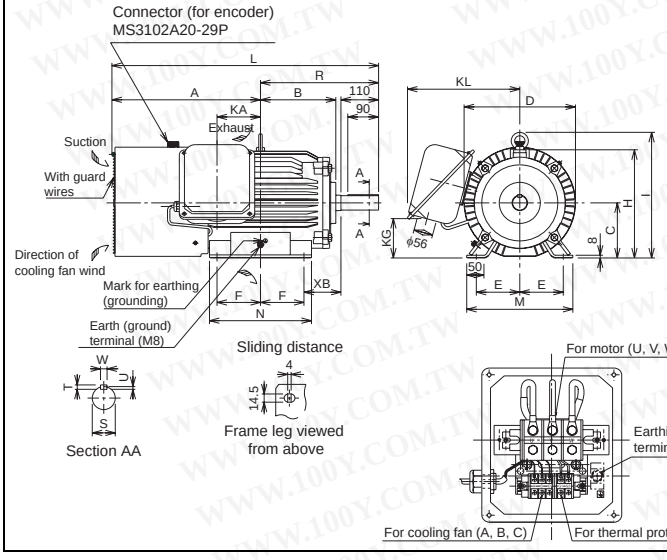

SF-V5RU(H) 30K, 37K, 45K, 55K

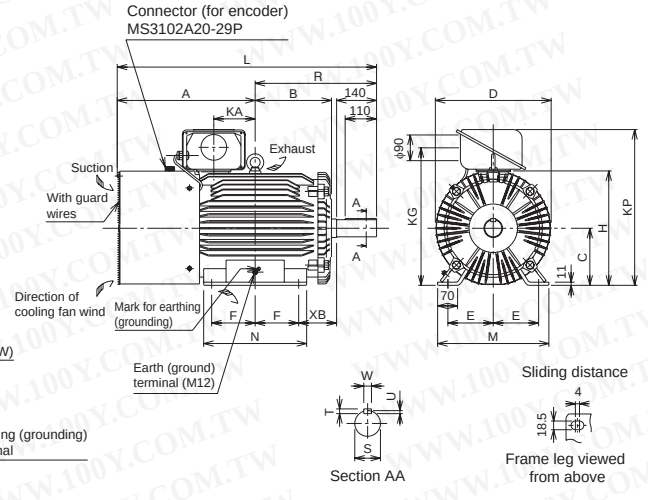

Make sure to earth the earth terminal of the frame installation foot as well as the earth terminal in the terminal box.

Dimensions table

(Unit: mm)

SF-V5RU Output (kW)	SF-V5RU1 Output (kW)	SF-V5RU3 Output (kW)	SF-V5RU4 Output (kW)	Frame No.	Mass (kg)	Motor																							Terminal Screw Size		
						A	B	C	D	E	F	H	I	KA	KG	KL(KP)	L	M	ML	N	XB	Q	QK	R	S	T	U	W	U,V,W	A,B,(C)	G1,G2
1.5	—	—	—	90L	24	256.5	114	90	183.6	70	62.5	198	—	53	65	220(210)	425	175	—	150	56	—	—	168.5	24j6	7	4	8	M6	M4	M4
2.2	1.5	—	—	100L	33	284	128	100	207	80	70	203.5	230	65	78	231	477	200	212	180	63	60	45	193	28j6	7	4	8	M6	M4	M4
3.7	2.2	1.5	—	112M	41	278	135	112	228	95	70	226	253	69	93	242	478	230	242	180	70	60	45	200	28j6	7	4	8	M6	M4	M4
5.5	3.7	2.2	—	132S	52	303	152	132	266	108	70	265	288	75	117	256	542	256	268	180	89	80	63	239	38k6	8	5	10	M6	M4	M4
7.5	5.5	3.7	1.5	132M	62	322	171	132	266	108	89	265	288	94	117	256	580	256	268	218	89	80	63	258	38k6	8	5	10	M6	M4	M4
11	7.5	5.5	2.2	160M	99	412	198	160	318	127	105	316	367	105	115	330	735	310	—	254	108	—	—	323	42k6	8	5	12	M8	M4	M4
15	11	7.5	3.7	160L	113	434	220	160	318	127	127	316	367	127	115	330	779	310	—	298	108	—	—	345	42k6	8	5	12	M8	M4	M4
18.5	—	—	—	180M	138	438.5	225.5	180	363	139.5	120.5	359	410	127	139	352	790	335	—	285	121	—	—	351.5	48k6	9	5.5	14	M8	M4	M4
22	15	11	—		160																										
—	18.5	15	5.5	180L	200	457.5	242.5	180	363	139.5	139.5	359	410	146	139	352	828	335	—	323	121	—	—	370.5	55m6	10	6	16	M8	M4	M4
30	—	—	—	200L	238	483.5	267.5	200	406	159	152.5	401	—	145	487	(546)	909	390	—	361	133	—	—	425.5	60m6	—	—	—	M10	M4	M4
30, 45	22, 30	18.5	7.5		255																										
55	37	22, 30	11, 15	225S	320	500	277	225	446	178	143	446	—	145	533	(592)	932	428	—	342	149	—	—	432	65m6	—	—	—	M10	M4	M4

Note) 1. Install the motor on the floor and use it with the shaft horizontal.
2. Leave an enough clearance between the fan suction port and wall to ensure adequate cooling. Also, check that the ventilation direction of a fan is from the opposite load side to the load side.
3 The size difference of top and bottom of the shaft center height is $^{0}_{-0.5}$
4 The 400V class motor has -H at the end of its type name.

Dedicated motor (SF-V5RU(H)) outline dimension drawings (1500r/min series) (standard horizontal type with brake)

SF-V5RU(H) 1KB

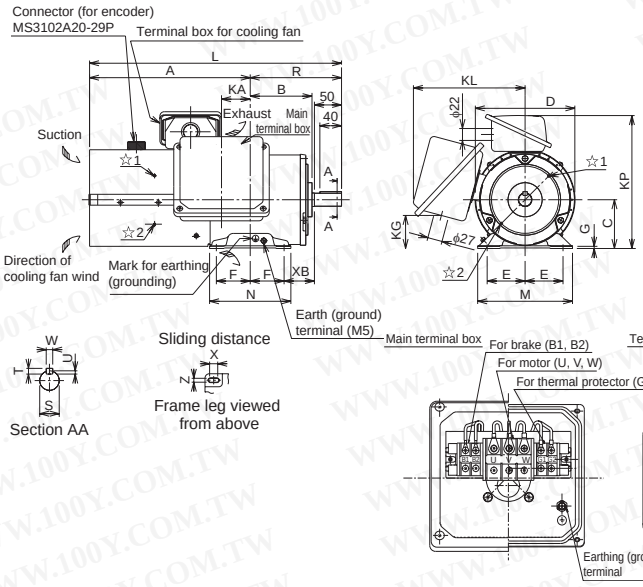

SF-V5RU(H) 2KB, 3KB, 5KB, 7KB

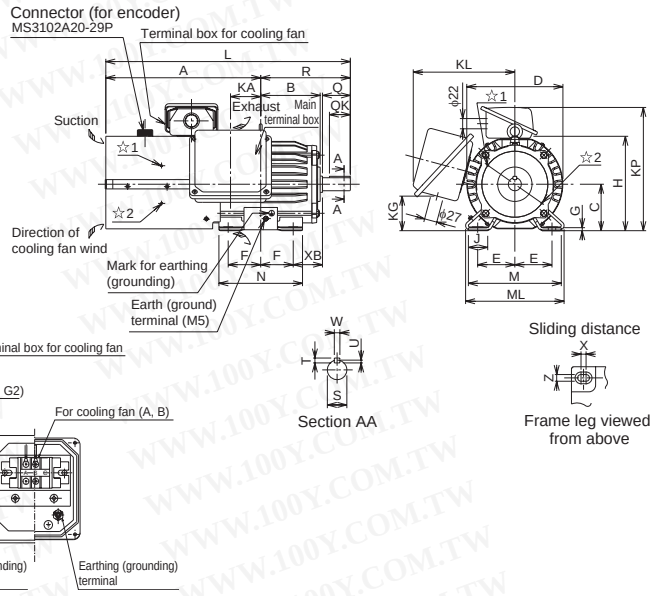

SF-V5RU(H) 11KB, 15KB, 18KB, 22KB

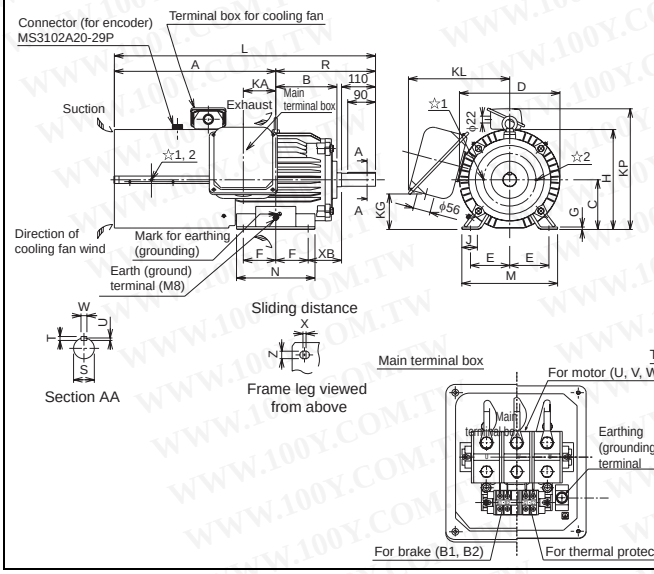

SF-V5RU(H) 30KB, 37KB, 45KB, 55KB

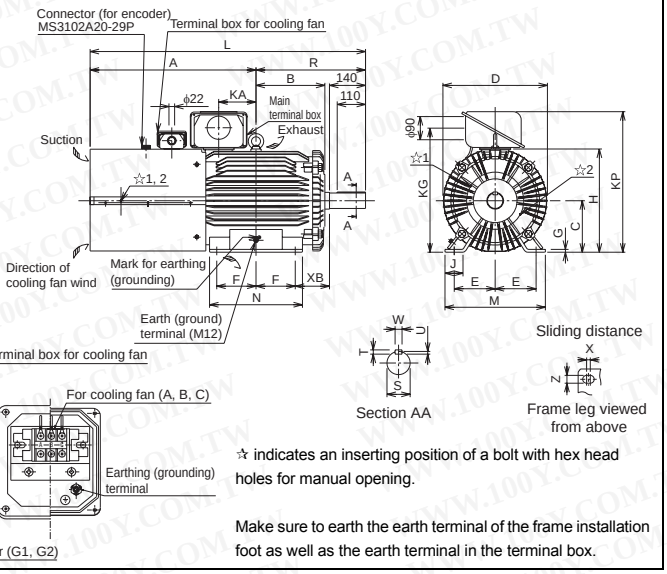

☆ indicates an inserting position of a bolt with hex head holes for manual opening.

Make sure to earth the earth terminal of the frame installation foot as well as the earth terminal in the terminal box.

Dimensions table

(Unit: mm)

SF-V5RUB Output (kW)	SF-V5RUB1 Output (kW)	SF-V5RUB3 Output (kW)	SF-V5RUB4 Output (kW)	Frame No.	Mass (kg)	Motor																								Shaft End							Terminal Screw Size			
						A	B	C	D	E	F	G	H	I	J	KA	KD	KG	KL	KP	L	M	ML	N	X	XB	Z	Q	QK	R	S	T	U	W	U,V,W	A,B,(C)	G1,G2	B1,B2
1.5	—	—	—	90L	29	296.5	114	90	183.6	70	62.5	4	—	—	—	53	27	65	220	245	465	175	—	150	15	56	9	50	40	168.5	24j6	7	4	8	M6	M4	M4	M4
2.2	1.5	—	—	100L	46	333.5	128	100	207	80	70	6.5	—	—	40	65	27	78	231	265	526.5	200	212	180	4	63	12	60	45	193	28j6	7	4	8	M6	M4	M4	M4
3.7	2.2	1.5	—	112M	53	355	135	112	228	95	70	6.5	—	—	40	69	27	93	242	290	555	230	242	180	4	70	12	60	45	200	28j6	7	4	8	M6	M4	M4	M4
5.5	3.7	2.2	—	132S	70	416	152	132	266	108	70	6.5	—	—	40	75	27	117	256	329	655	256	268	180	4	89	12	80	63	239	38k6	8	5	10	M6	M4	M4	M4
7.5	5.5	3.7	1.5	132M	80	435	171	132	266	108	89	6.5	—	—	40	94	27	117	256	329	693	256	268	218	4	89	12	80	63	258	38k6	8	5	10	M6	M4	M4	M4
11	7.5	5.5	2.2	160M	140	522.5	198	160	318	127	105	8	—	—	50	105	56	115	330	391	845.5	310	—	254	4	108	14.5	110	90	323	42k6	8	5	12	M8	M4	M4	M4
15	11	7.5	3.7	160L	155	544.5	220	160	318	127	127	8	—	—	50	127	56	115	330	391	889.5	310	—	298	4	108	14.5	110	90	345	42k6	8	5	12	M8	M4	M4	M4
18.5	—	—	—	180M	185	568.5	225.5	180	363	139.5	120.5	8	—	—	50	127	56	139	352	428	920	335	—	285	4	121	14.5	110	90	351.5	48k6	9	5.5	14	M8	M4	M4	M4
22	15	11	—		215																																			
—	18.5	15	5.5	180L	—	—	—	—	—	—	—	—	—	—	—	—	—	—	—	—	—	—	—	—	—	—	—	—	—	—	—	—	—	—	—	—	—	—	—	—
30	—	—	—	200L	305	644.5	267.5	200	406	159	152.5	11	—	—	70	145	90	487	—	546	1070	390	—	361	4	133	18.5	140	110	425.5	60m6	11	7	18	M10	M4	M4	M4
30, 45	22, 30	18.5	7.5		330																																			
55	37	22, 30	11, 15	225S	395	659	277	225	446	178	143	11	—	—	70	145	90	533	—	592	1091	428	—	342	4	149	18.5	140	110	432	65m6	11	7	18	M10	M4	M4	M4

*

Note) 1. Install the motor on the floor and use it with the shaft horizontal.
2. Leave an enough clearance between the fan suction port and wall to ensure adequate cooling. Also, check that the ventilation direction of a fan is from the opposite load side to the load side.
3 The size difference of top and bottom of the shaft center height is $^{0}_{-0.5}$
4 The 400V class motor has -H at the end of its type name.
5. Since a brake power device is a stand-alone, install it inside the enclosure. (This device should be arranged at the customer side.)

* Consult our sales office.

勝 特 力 材 料 886-3-5753170
胜特力电子(上海) 86-21-34970699
胜特力电子(深圳) 86-755-83298787
Http://www.100y.com.tw

Dedicated motor (SF-V5RU(H)) outline dimension drawings (1500r/min series) (flange type)

SF-V5RUF(H) 1K

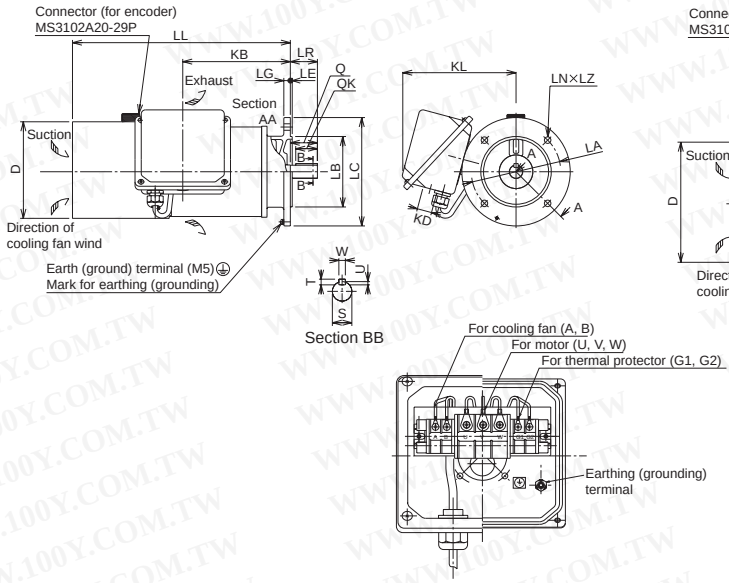

SF-V5RUF(H) 2K, 3K, 5K, 7K

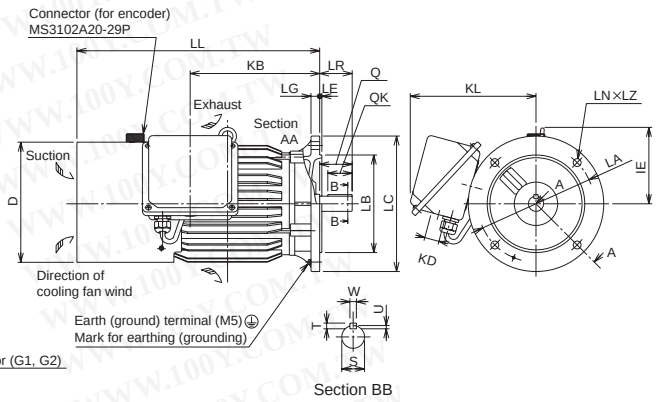

SF-V5RUF(H) 11K, 15K, 18K, 22K

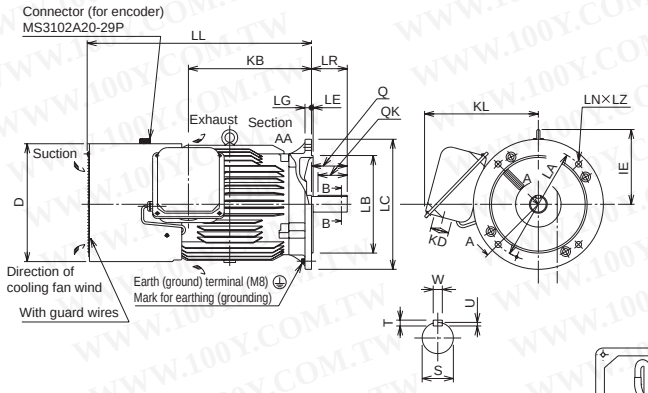

SF-V5RUF(H) 30K, 37K, 45K

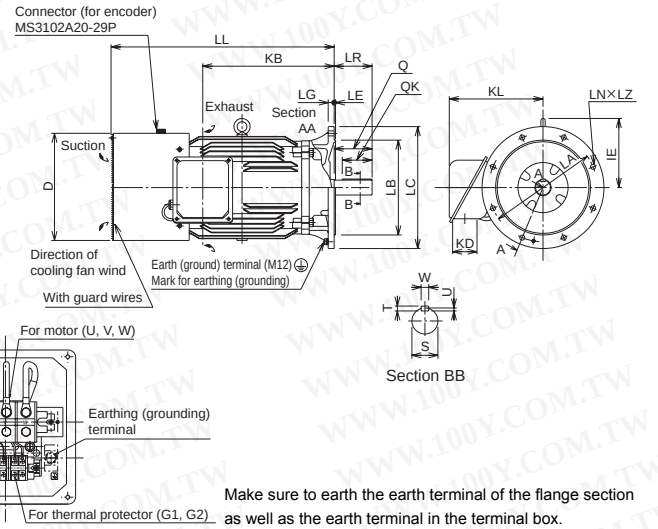

Make sure to earth the earth terminal of the flange section as well as the earth terminal in the terminal box.

Dimensions table

(Unit: mm)

SF-V5RUF Output (kW)	SF-V5RUF1 Output (kW)	SF-V5RUF3 Output (kW)	SF-V5RUF4 Output (kW)	Flange Number	Frame No.	Mass (kg)	Motor													Shaft End							Terminal Screw Size		
							D	IE	KB	KD	KL	LA	LB	LC	LE	LG	LL	LN	LZ	LR	Q	QK	S	T	U	W	U,V,W	A,B,(C)	G1,G2
1.5	—	—	—	FF165	90L	26.5	183.6	—	198.5	27	220	165	130j6	200	3.5	12	402	4	12	50	50	40	24j6	7	4	8	M6	M4	M4
2.2	1.5	—	—	FF215	100L	37	207	130	213	27	231	215	180j6	250	4	16	432	4	14.5	60	60	45	28j6	7	4	8	M6	M4	M4
3.7	2.2	1.5	—	FF215	112M	46	228	141	239	27	242	215	180j6	250	4	16	448	4	14.5	60	60	45	28j6	7	4	8	M6	M4	M4
5.5	3.7	2.2	—	FF265	132S	65	266	156	256	27	256	265	230j6	300	4	20	484	4	14.5	80	80	63	38k6	8	5	10	M6	M4	M4
7.5	5.5	3.7	1.5	FF265	132M	70	266	156	294	27	256	265	230j6	300	4	20	522	4	14.5	80	80	63	38k6	8	5	10	M6	M4	M4
11	7.5	5.5	2.2	FF300	160M	110	318	207	318	56	330	300	250j6	350	5	20	625	4	18.5	110	110	90	42k6	8	5	12	M8	M4	M4
15	11	7.5	3.7	FF300	160L	125	318	207	362	56	330	300	250j6	350	5	20	669	4	18.5	110	110	90	42k6	8	5	12	M8	M4	M4
18.5	—	—	—	FF350	180M	160	363	230	378.5	56	352	350	300j6	400	5	20	690	4	18.5	110	110	90	48k6	9	5.5	14	M8	M4	M4
22	15	11	—			185																							
—	18.5	15	5.5	FF350	180L	—	—	—	—	—	—	—	—	—	—	—	—	—	—	—	—	—	—	—	—	—	—	—	— *
30	—	—	—	FF400	200L	270	406	255	485	90	346	400	350j6	450	5	22	823.5	8	18.5	140	140	110	60m6	11	7	18	M10	M4	M4
37, 45	22, 30	18.5	7.5			290																							

Note) 1. Install the motor on the floor and use it with the shaft horizontal.
For use under the shaft, the protection structure of the cooling fan is IP20.
2. Leave an enough clearance between the fan suction port and wall to ensure adequate cooling.
Also, check that the ventilation direction of a fan is from the opposite load side to the load side.
3 The size difference of top and bottom of the shaft center height is $^{0}_{-0.5}$
4 The 400V class motor has -H at the end of its type name.

* Consult our sales office.

勝 特 力 材 料 886-3-5753170
胜特力电子(上海) 86-21-34970699
胜特力电子(深圳) 86-755-83298787
Http://www.100y.com.tw

Dedicated motor (SF-V5RU(H)) outline dimension drawings (1500r/min series) (flange type with brake)

SF-V5RUF(H) 1KB

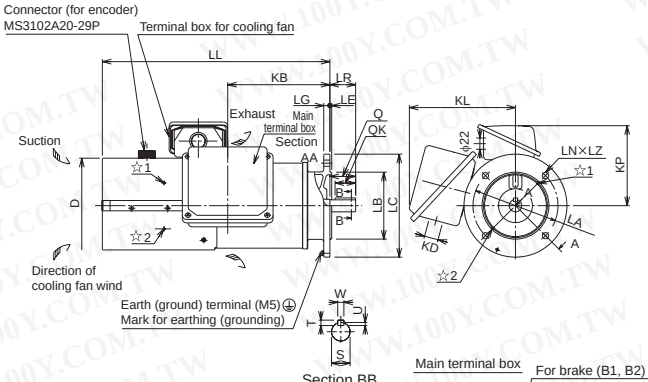

SF-V5RUF(H) 2KB, 3KB, 5KB, 7KB

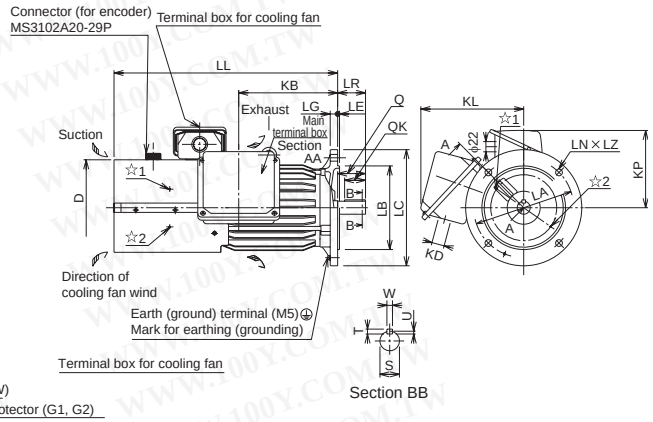

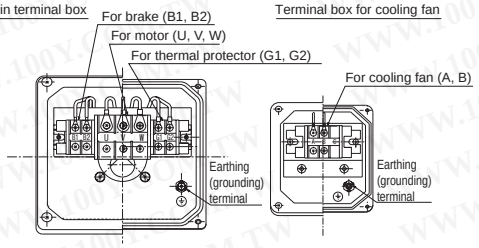

SF-V5RUF(H) 11KB, 15KB

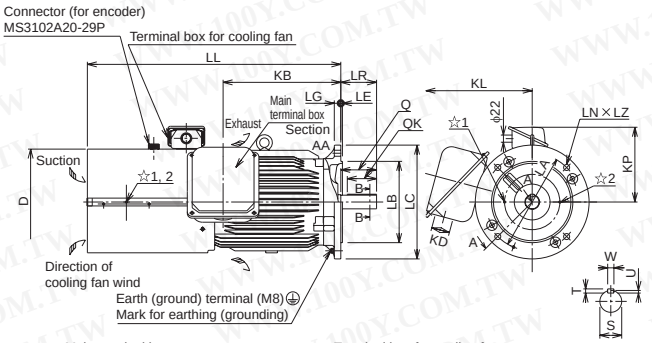

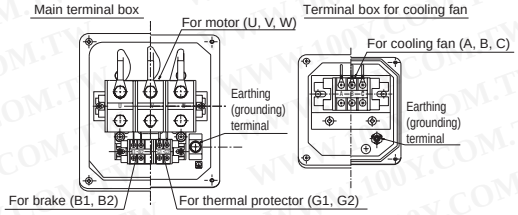

☆ indicates an inserting position of a bolt with hex head holes for manual opening.

Make sure to earth the earth terminal of the flange section as well as the earth terminal in the terminal box.

Dimensions table

(Unit: mm)

SF-V5RUFB Output (kW)	SF-V5RUFB1 Output (kW)	SF-V5RUFB3 Output (kW)	SF-V5RUFB4 Output (kW)	Flange Number	Frame No.	Mass (kg)	Motor													Shaft End							Terminal Screw Size			
							D	KB	KD	KL	KP	LA	LB	LC	LE	LG	LL	LN	LZ	LR	Q	QK	S	T	U	W	U,V,W	A,B,(C)	B1,B2	G1,G2
1.5	—	—	—	FF165	90L	31.5	183.6	198.5	27	220	155	165	130j6	200	3.5	12	442	4	12	50	50	40	24j6	7	4	8	M6	M4	M4	M4
2.2	1.5	—	—	FF215	100L	50	207	213	27	231	165	215	180j6	250	4	16	481.5	4	14.5	60	60	45	28j6	7	4	8	M6	M4	M4	M4
3.7	2.2	1.5	—	FF215	112M	58	228	239	27	242	178	215	180j6	250	4	16	525	4	14.5	60	60	45	28j6	7	4	8	M6	M4	M4	M4
5.5	3.7	2.2	—	FF265	132S	83	266	256	27	256	197	265	230j6	300	4	20	597	4	14.5	80	80	63	38k6	8	5	10	M6	M4	M4	M4
7.5	5.5	3.7	1.5	FF265	132M	88	266	294	27	256	197	265	230j6	300	4	20	635	4	14.5	80	80	63	38k6	8	5	10	M6	M4	M4	M4
11	7.5	5.5	2.2	FF300	160M	151	318	318	56	330	231	300	250j6	350	5	20	735.5	4	18.5	110	110	90	42k6	8	5	12	M8	M4	M4	M4
15	11	7.5	3.7	FF300	160L	167	318	362	56	330	231	300	250j6	350	5	20	779.5	4	18.5	110	110	90	42k6	8	5	12	M8	M4	M4	M4

Note) 1. Install the motor on the floor and use it with the shaft horizontal.
For use under the shaft, the protection structure of the cooling fan is IP20.
2. Leave an enough clearance between the fan suction port and wall to ensure adequate cooling.
Also, check that the ventilation direction of a fan is from the opposite load side to the load side.
3 The size difference of top and bottom of the shaft center height is $^{0}_{-0.5}$
4 The 400V class motor has -H at the end of its type name.
5. Since a brake power device is a stand-alone, install it inside the enclosure.
(This device should be arranged at the customer side.)

勝 特 力 材 料 886-3-5753170
胜特力电子(上海) 86-21-34970699
胜特力电子(深圳) 86-755-83298787
Http://www.100y.com.tw

Dedicated motor (SF-THY) outline dimension drawings (1500r/min series)

75kW to 160kW

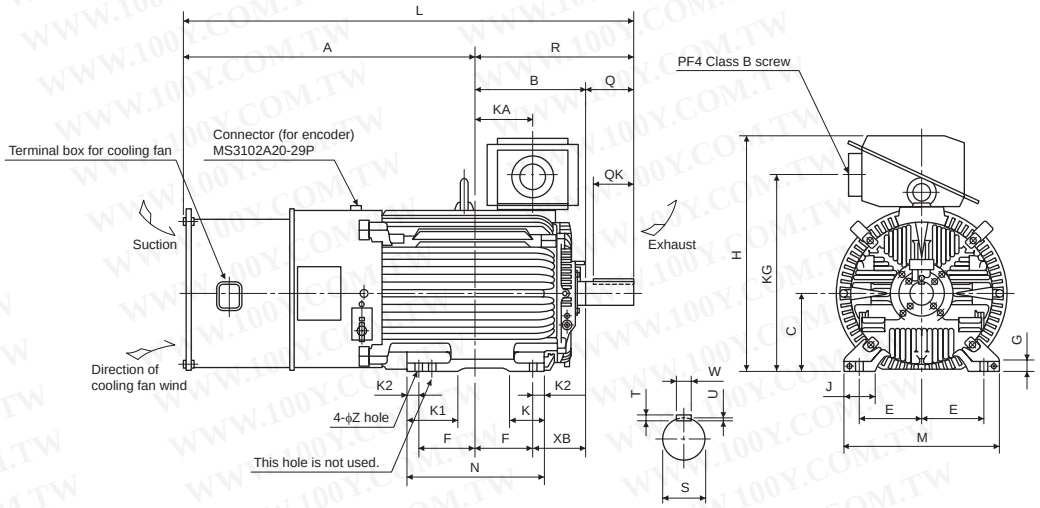

200kW, 250kW

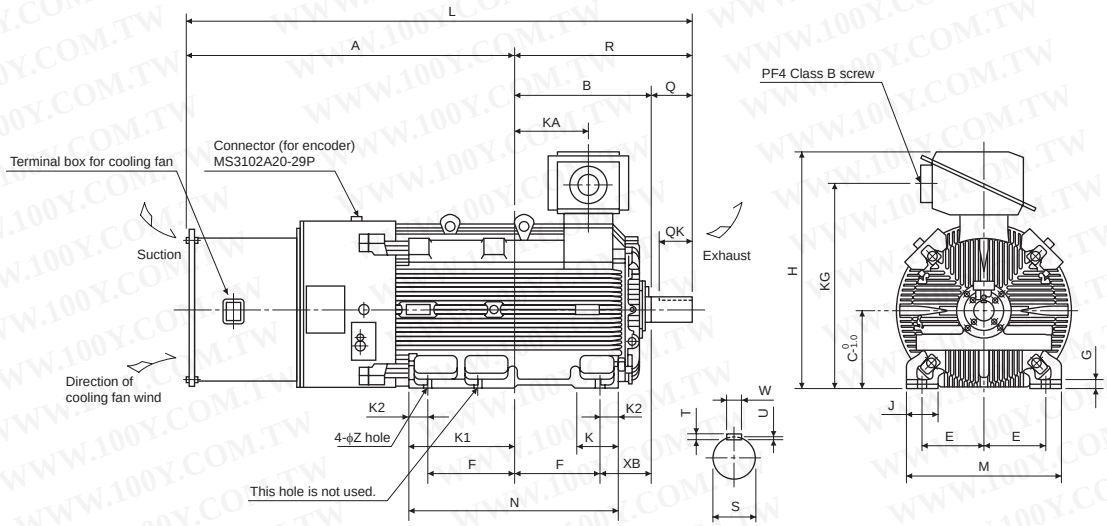

Dimensions table

(Unit: mm)

Outpur	Frame No.	Mass (kg)	Motor																				Shaft End Size					
			A	B	C	D	E	F	G	H	J	K	K1	K2	L	M	N	R	Z	XB	KA	KG	Q	QK	S	W	T	U
75	250MD	610	988.5	340.5	250	557	203	174.5	30	775	100	130	168	50	1471	486	449	482.5	24	168	157.5	635	140	110	ϕ75m6	20	12	7.5
90	250MD	660	988.5	340.5	250	557	203	174.5	30	775	100	130	168	50	1471	486	449	482.5	24	168	157.5	635	140	110	ϕ75m6	20	12	7.5
110	280MD	870	1049.5	397.5	280	607	228.5	209.5	30	845	110	130	181	40	1619	560	449	569.5	24	190	210.5	705	170	140	ϕ85m6	22	14	9
132	280MD	890	1049.5	397.5	280	607	228.5	209.5	30	845	110	130	181	40	1619	560	449	569.5	24	190	210.5	705	170	140	ϕ85m6	22	14	9
160	280MD	920	1049.5	397.5	280	607	228.5	209.5	30	845	110	130	181	40	1619	560	499	569.5	24	190	210.5	705	170	140	ϕ85m6	22	14	9
200	280L	1170	1210.5	416.5	280	652	228.5	228.5	30	885	110	160	160	75	1799	560	607	588.5	24	190	214.5	745	170	140	ϕ85m6	22	14	9
250	315H	1630	1343	565	315	717	254	355	35	965	130	175	428	80	2084	636	870	741	28	216	306	825	170	140	ϕ95m6	25	14	9

Note) The tolerance of the top and bottom of the center shaft height *C is $^{0}_{-0.5}$ for the 250 frame and $^{0}_{-1.0}$ for the 280 frame or more.

勝 特 力 材 料 886-3-5753170
胜特力电子(上海) 86-21-34970699
胜特力电子(深圳) 86-755-83298787
Http://www.100y.com.tw

6.4 Heatsink protrusion attachment procedure

When encasing the inverter in an enclosure, the generated heat amount in an enclosure can be greatly reduced by installing the heatsink portion of the inverter outside the enclosure. When installing the inverter in a compact enclosure, etc., this installation method is recommended.

6.4.1 When using a heatsink protrusion attachment (FR-A7CN)

For the FR-A720-1.5K to 55K, FR-A740-0.4K to 132K, a heatsink can be protruded outside the enclosure using a heatsink protrusion attachment (FR-A7CN). (For the 160K or more, attachment is not necessary when the heatsink is to be protruded.)
For a panel cut dimension drawing and an installation procedure of the heatsink protrusion attachment (FR-A7CN) to the inverter, refer to a manual of "heatsink protrusion attachment".

6.4.2 Protrusion of heatsink of the FR-A740-160K or more

(1) Panel cutting

Cut the panel of the enclosure according to the inverter capacity.

• FR-A740-160K, 185K

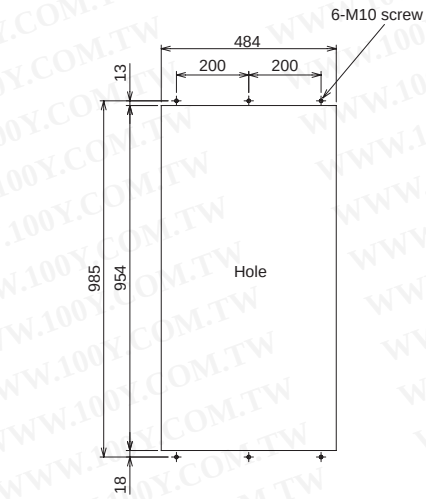

• FR-A740-220K, 250K, 280K

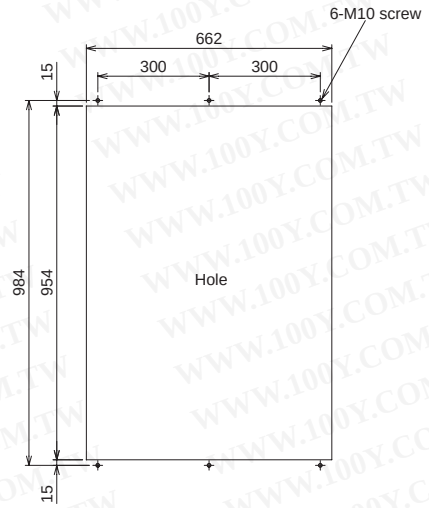

• FR-A740-315K, 355K

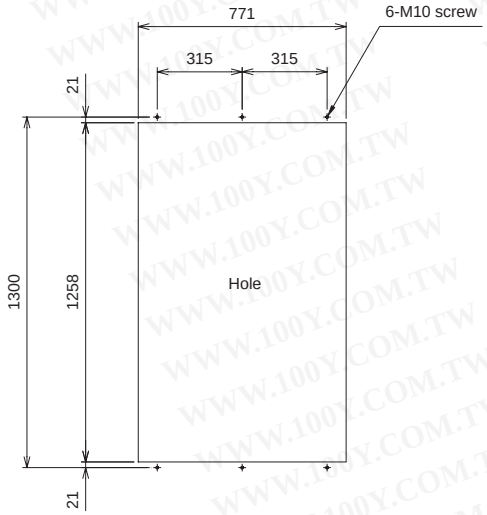

• FR-A740-400K, 450K, 500K

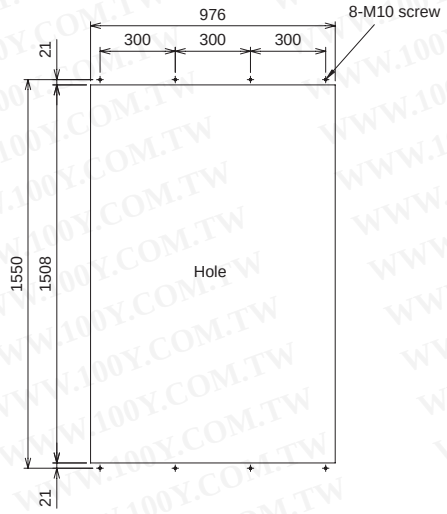

勝 特 力 材 料 886-3-5753170
胜特力电子(上海) 86-21-34970699
胜特力电子(深圳) 86-755-83298787
Http://www.100y.com.tw

(2) Shift and removal of a rear side installation frame

- **FR-A740-160K to 280K**

  One installation frame is attached to each of the upper and lower part of the inverter. Change the position of the rear side installation frame on the upper and lower side of the inverter to the front side as shown on the right. When changing the installation frames, make sure that the installation orientation is correct.

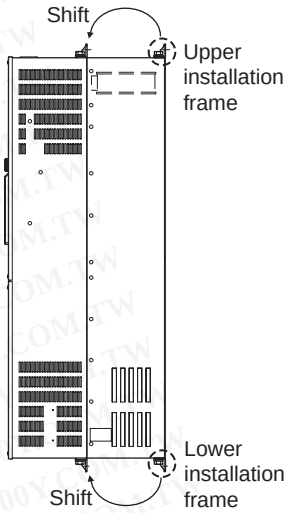

- **FR-A740-315K or more**

  Two installation frames each are attached to the upper and lower part of the inverter. Remove the rear side installation frame on the upper and lower side of the inverter as shown on the right.

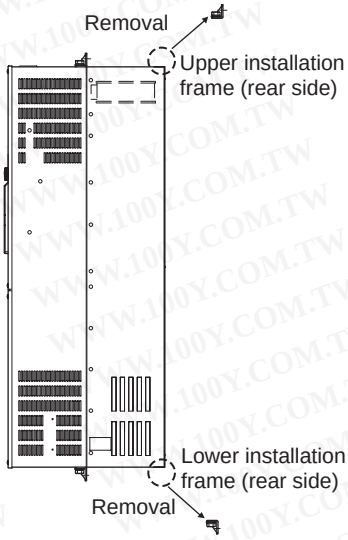

勝 特 力 材 料 886-3-5753170
胜特力电子(上海) 86-21-34970699
胜特力电子(深圳) 86-755-83298787
Http://www.100y.com.tw

(3) Installation of the inverter

Push the inverter heatsink portion outside the enclosure and fix the enclosure and inverter with upper and lower installation frame.

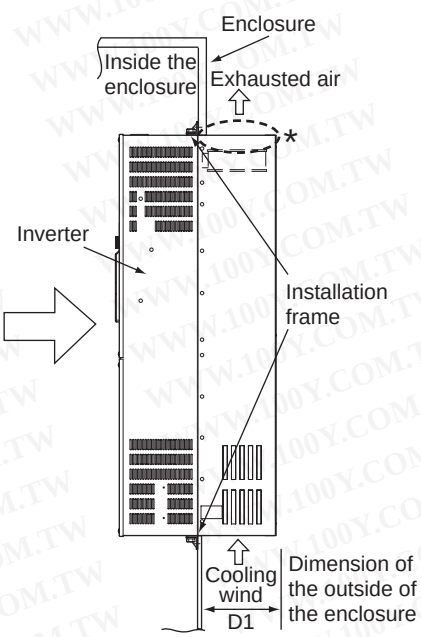

* For the FR-A740-160K or more, there are finger guards behind the enclosure. Therefore, the thickness of the panel should be less than 10mm (*1) and also do not place anything around finger guards to avoid contact with the finger guards.

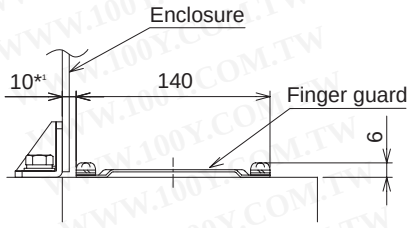

Inverter Type	D1 (mm)
FR-A740-160K, 185K	185
FR-A740-220K to 500K	184

CAUTION

- Having a cooling fan, the cooling section which comes out of the enclosure can not be used in the environment of water drops, oil, mist, dust, etc.
- Be careful not to drop screws, dust etc. into the inverter and cooling fan section.

勝 特 力 材 料 886-3-5753170
胜特力电子(上海) 86-21-34970699
胜特力电子(深圳) 86-755-83298787
Http://www.100y.com.tw

Appendix 1 For customers who have replaced the older model with this inverter

Appendix 1-1 Replacement of the FR-A500 series

(1) Instructions for installation

1)Removal procedure of the front cover was changed. (with screws) Please note. *(Refer to page 5.)*
2)Removal procedure of the operation panel was changed. (with screws) Please note. *(Refer to page 5.)*
3)Plug-in options of the A500 series are not compatible
4)Operation panel (FR-DU04) can not be used.
5)Setup software (FR-SW0-SETUP/FR-SW1-SETUP) can not be used.

(2) Wiring instructions

1)The control circuit terminal block can be used for the FR-A700 series without removing wiring.
Note that the wiring cover (0.4K to 22K) is not compatible.

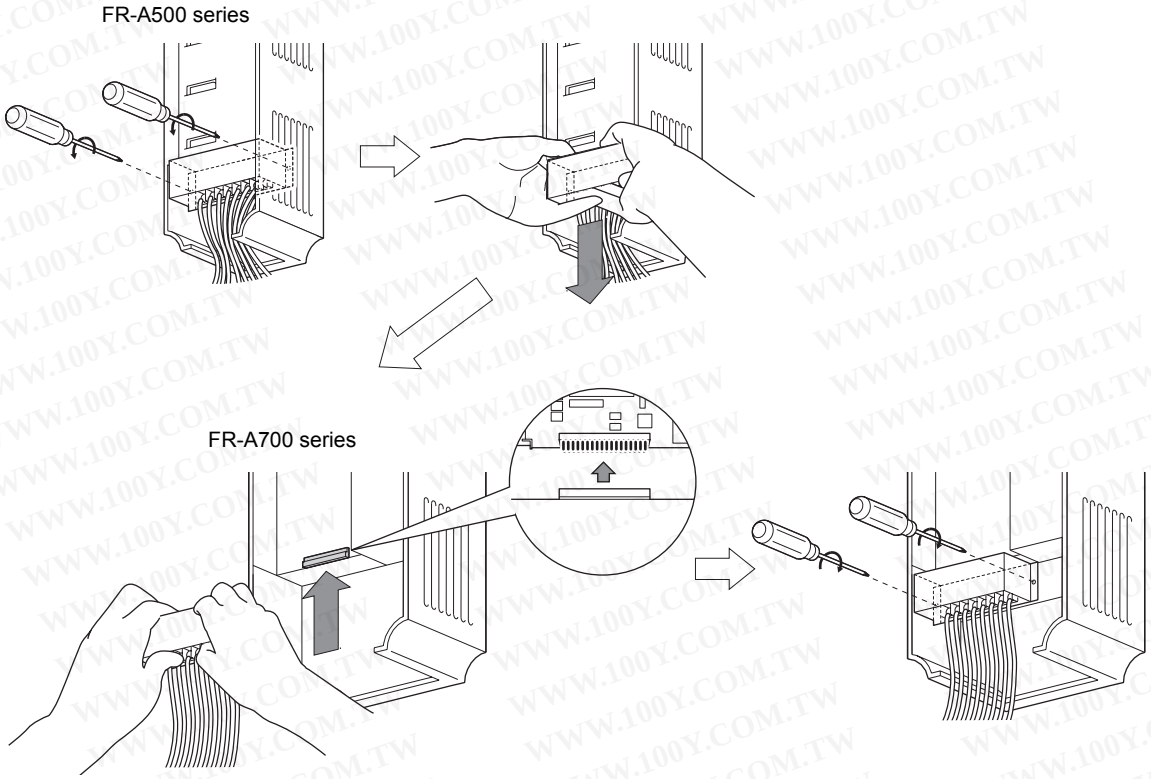

(Note that the relay output 2 (A2, B2, C2) specific for the FR-A700 series can not be used with the FR-A500 series terminals.)

(3) Instructions for continuous use of the FR-PU04 (parameter unit)

1) For the FR-A700 series, many functions (parameters) have been added. When setting these parameters, the parameter name and setting range are not displayed. User initial value list and user clear of the HELP function can not be used.
2) For the FR-A700 series, many protective functions have been added. These functions activate, but all alarms are displayed as "Fault 14". When the alarm history has been checked, "E.14" appears. Added alarm display will not appear on the parameter unit.
3) User initial value setting can not be used.
4) User registration/clear (user group 2) can not be used.
5) Parameter copy/verification function can not be used.

(4) Parameter resetting

It is easy if you use setup software (FR-Configurator).

勝 特 力 材 料 886-3-5753170
胜特力电子(上海) 86-21-34970699
胜特力电子(深圳) 86-755-83298787
Http://www.100y.com.tw

(5) Main differences and compatibilities with the FR-A500(L) series

Item	FR-A500(L)	FR-A700
Control method	V/F control Advanced magnetic flux vector control	V/F control Advanced magnetic flux vector control Real sensorless vector control Vector control (used with a plug-in option FR-A7AP)
Changed/cleared functions	User group 1 (16), user group 2 (16) *(Pr. 160, Pr. 173 to Pr. 175)*	User group (16) only Setting methods were partially changed *(Pr. 160, Pr. 172 to Pr. 173)*
	User initial value setting *(Pr. 199)*	User initial value setting *(Pr. 199)* was cleared Substitutable with the copy function of the operation panel (FR-DU07)
	Long wiring mode (*Pr. 240* setting 10, 11)	Setting is not necessary (*Pr. 240* settings "10" and "11" were cleared)
	Intelligent mode selection *(Pr. 60)*	Parameter number change *(Pr. 60 Energy saving control selection)* *(Pr. 292 Automatic acceleration/deceleration)*
	Program operation *(Pr. 200 to Pr. 231)*	Function was cleared
Terminal block	Removable terminal block	Removable terminal block Upward compatibility (A500 terminal block mountable)
PU	FR-PU04, DU04	FR-PU07 FR-DU07 FR-PU04 (Some functions, such as parameter copy, are unavailable.) FR-DU04 unavailable
Plug-in Options	Dedicated plug-in option (incompatible)	
	Computer link, relay output option FR-A5NR	Built into the inverter (RS-485 terminals, relay output 2 points)
Installation size	· FR-A740-0.4K to 7.5K, 18.5K to 55K, 110K, 160K are compatible in mounting dimensions For the FR-A740-11K, 15K, an optional intercompatibility attachment (FR-AAT) is necessary. · Heatsink protrusion attachment is not compatible. Also, the panel cut dimension of 3.7K or less, 400V class 11K, 15K, 75K or more is not compatible.	

Appendix 1-2 Replacement of the FR-A200 <EXCELENT> series

Instructions for installation

- When using the installation holes of the FR-A200(E) series, FR-A5AT (intercompatibility attachment) is necessary.

勝 特 力 材 料 886-3-5753170
胜特力电子(上海) 86-21-34970699
胜特力电子(深圳) 86-755-83298787
Http://www.100y.com.tw

Appendix 2 Instructions for UL and cUL

(Conforming standard UL 508C, CSA C22.2 No.14)

(1) Installation

This inverter is UL-listed as a product for use in an enclosure.
Design an enclosure so that the inverter ambient temperature, humidity and atmosphere satisfy the specifications. *(Refer to page 161.)*

Wiring protection

For installation in the United States, branch circuit protection must be provided in accordance with the National Electrical Code and any applicable provincial codes.
For installation in Canada, branch circuit protection must be provided in accordance with the Canada Electrical Code and any applicable provincial codes.
Use the Class RK5, Class T or L type fuses certified by UL and cUL.

FR-A720-□□K		0.4	0.75	1.5	2.2	3.7	5.5	7.5	11	15	18.5	22	30	37	45	55
Rated voltage(V)		240V or more														
Rated current (A)	Without power factor improving reactor	15	20	30	40	60	80	150	175	200	225	300	350	400	500	500
	With power factor improving reactor	15	20	20	30	50	70	125	150	200	200	250	300	350	400	500

FR-A720-□□K		75	90
Rated voltage(V)		240V or more	
Rated current (A)	Without power factor improving reactor	—	—
	With power factor improving reactor	600	700

FR-A740-□□K		0.4	0.75	1.5	2.2	3.7	5.5	7.5	11	15	18.5	22	30	37	45	55
Rated voltage(V)		480V or more														
Rated current (A)	Without power factor improving reactor	6	10	15	20	30	40	70	80	90	110	150	175	200	250	300
	With power factor improving reactor	6	10	10	15	25	35	60	70	90	100	125	150	175	200	250

FR-A740-□□K		75	90	110	132	160	185	220	250	280	315	355	400	450	500
Rated voltage(V)		500V or more													
Rated current (A)	Without power factor improving reactor	—	—	—	—	—	—	—	—	—	—	—	—	—	—
	With power factor improving reactor	300	350	400	500	600	700	800	900	1000	1100	1200	1350	1500	1800

(2) Wiring of the power supply and motor

For wiring the input (R/L1, S/L2, T/L3) and output (U, V, W) terminals of the inverter, use the UL-listed copper wires (rated at 75°C) and round crimping terminals. Crimp the crimping terminals with the crimping tool recommended by the terminal maker.

(3) Short circuit ratings

- 200V class
  Suitable For Use in A Circuit Capable Of Delivering Not More Than 100kA rms Symmetrical Amperes, 264V Maximum.
- 400V class
  55K or less
  Suitable For Use in A Circuit Capable Of Delivering Not More Than 100kA rms Symmetrical Amperes, 528V Maximum.
  75K or more
  Suitable For Use in A Circuit Capable Of Delivering Not More Than 100kA rms Symmetrical Amperes, 550V Maximum.

勝 特 力 材 料 886-3-5753170
胜特力电子(上海) 86-21-34970699
胜特力电子(深圳) 86-755-83298787
Http://www.100y.com.tw

(4) Motor overload protection

This inverter is certified as a motor overload protection device by UL.
When using the electronic thermal relay function as motor overload protection, set the rated motor current to *Pr. 9 Electronic thermal O/L relay*.

Electronic thermal relay function operation characteristic

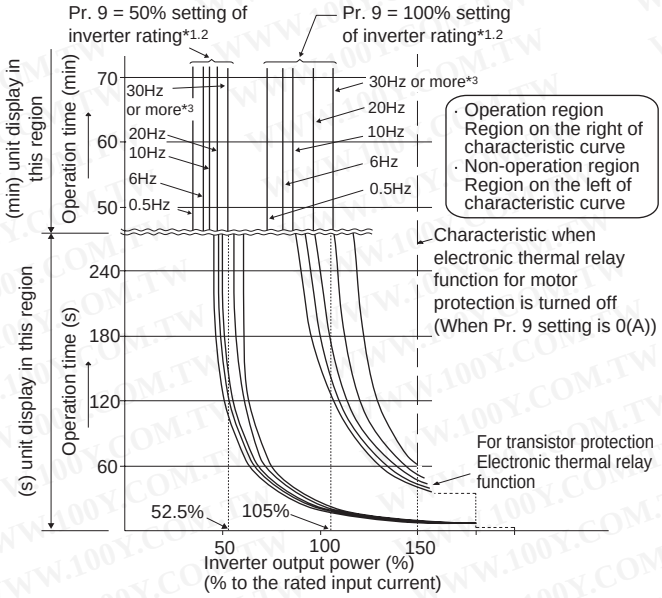

This function detects the overload (overheat) of the motor, stops the operation of the inverter's output transistor, and stops the output.
(The operation characteristic is shown on the left)

When using the Mitsubishi constant-torque motor

1) Set "1" or any of "13" to "18", "50", "53", "54" in *Pr. 71*.
   (This provides a 100% continuous torque characteristic in the low-speed range.)
2) Set the rated current of the motor in *Pr. 9*.

*1 When a value 50% of the inverter rated output current (current value) is set in *Pr. 9*

*2 The % value denotes the percentage to the inverter rated output current. It is not the percentage to the motor rated current.

*3 When you set the electronic thermal relay function dedicated to the Mitsubishi constant-torque motor, this characteristic curve applies to operation at 6Hz or higher.

CAUTION

- Protective function by electronic thermal relay function is reset by inverter power reset and reset signal input. Avoid unnecessary reset and power-off.
- When multiple motors are operated by a single inverter, protection cannot be provided by the electronic thermal relay function. Install an external thermal relay to each motor.
- When the difference between the inverter and motor capacities is large and the setting is small, the protective characteristics of the electronic thermal relay function will be deteriorated. In this case, use an external thermal relay.
- A special motor cannot be protected by the electronic thermal relay function. Use the external thermal relay.

勝 特 力 材 料 886-3-5753170
胜特力电子(上海) 86-21-34970699
胜特力电子(深圳) 86-755-83298787
Http://www.100y.com.tw

勝 特 力 材 料 886-3-5753170
胜特力电子(上海) 86-21-34970699
胜特力电子(深圳) 86-755-83298787
Http://www.100y.com.tw

Appendix 3 Instructions for Compliance with the European Directives

(1) EMC Directive

We have self-confirmed our inverters as products compliant to the EMC Directive (second environment of conforming standard EN61800-3) and place the CE mark on the inverters.

Note: First environment
Environment including residential buildings. Includes buildings directly connected without a transformer to the low voltage power supply network which supplies power to residential buildings.
Second environment
Environment including all buildings except buildings directly connected without a transformer to the low voltage power supply network which supplies power to residential buildings.

1) Notes

Set the EMC filter valid and install the inverter and perform wiring according to the following instructions.

* The inverter is equipped with a built-in EMC filter. Set the EMC filter valid. (The EMC filter is invalid when shipped from the factory. (The FR-A720-0.4K and 0.75K are always valid.) For details, *refer to page 9*.)
* Connect the inverter to an earthed power supply.
* Install a motor and a control cable written in the EMC Installation Manual (BCN-A21041-204) according to the instruction.
* The cable length between the inverter and the motor is 5 m maximum.
* Confirm that the inverter complies with the EMC Directive as the industrial drives application for final installation.

(2) Low Voltage Directive

We have self-confirmed our inverters as products compliant to the Low Voltage Directive (Conforming standard EN 50178) and place the CE mark on the inverters.

1)Outline of instructions

* Do not use an earth leakage current breaker as an electric shock protector without connecting the equipment to the earth. Connect the equipment to the earth securely.
* Wire the earth terminal independently. (Do not connect two or more cables to one terminal.)
* Use the cable sizes on *page 15* under the following conditions.
  · Ambient temperature: 40°C maximum
  If conditions are different from above, select appropriate wire according to EN60204 Appendix C TABLE 5.
* Use a tinned (plating should not include zinc) crimping terminal to connect the earth (ground) cable. When tightening the screw, be careful not to damage the threads.
  For use as a product compliant with the Low Voltage Directive, use PVC cable whose size is indicated on *page 15*.
* Use the moulded case circuit breaker and magnetic contactor which conform to the EN or IEC Standard.
* When using an earth leakage current breaker, use a residual current operated protective device (RCD) of type B (breaker which can detect both AC and DC). If not, provide double or reinforced insulation between the inverter and other equipment, or put a transformer between the main power supply and inverter.
* Use the inverter under the conditions of overvoltage category II (usable regardless of the earth (ground) condition of the power supply), overvoltage category III (usable with the earthed-neutral system power supply, 400V class only) and pollution degree 2 or lower specified in IEC664.
  · To use the inverter of 37K or more (IP00) under the conditions of pollution degree 2, install it in the enclosure of IP 2X or higher.
  · To use the inverter under the conditions of pollution degree 3, install it in the enclosure of IP54 or higher.
  · To use the inverter of 30K or less (IP20) outside of an enclosure in the environment of pollution degree 2, fix a fan cover with fan cover fixing screws enclosed.

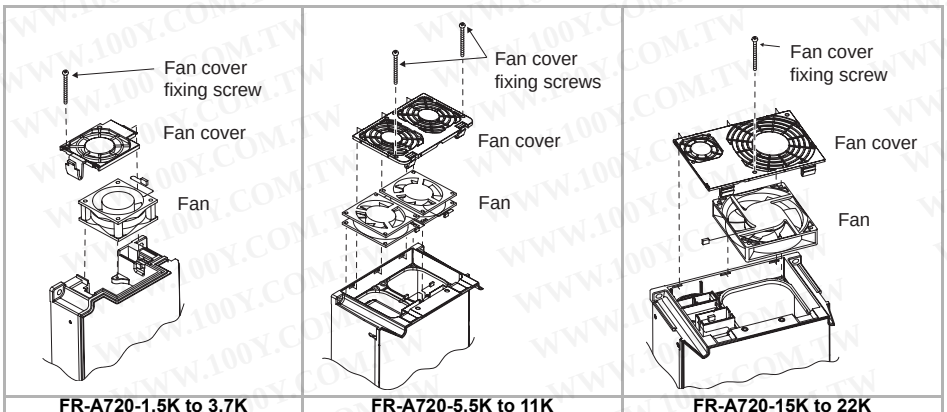

FR-A720-1.5K to 3.7K FR-A740-2.2K, 3.7K	FR-A720-5.5K to 11K FR-A740-5.5K to 15K	FR-A720-15K to 22K FR-A740-18.5K to 22K

* On the input and output of the inverter, use cables of the type and size set forth in EN60204 Appendix C.
* The operating capacity of the relay outputs (terminal symbols A1, B1, C1, A2, B2, C2) should be 30VDC, 0.3A. (Relay outputs are basically isolated from the inverter internal circuit.)
* Control circuit terminals on *page 8* are safely isolated from the main circuit.
* Environment

	During Operation	In Storage	During Transportation
Ambient temperature	-10°C to +50°C	-20°C to +65°C	-20°C to +65°C
Ambient humidity	90% RH or less	90% RH or less	90% RH or less
Maximum altitude	1000m	1000m	10000m

Details are given in the technical information "Low Voltage Directive Conformance Guide" (BCN-A21041-203). Please contact your sales representative.

勝 特 力 材 料 886-3-5753170
胜特力电子(上海) 86-21-34970699
胜特力电子(深圳) 86-755-83298787
Http://www.100y.com.tw

REVISIONS

*The manual number is given on the bottom left of the back cover.

Print Date	*Manual Number	Revision
Jun., 2005	IB(NA)-0600225ENG-A	First edition
Aug., 2005	IB(NA)-0600225ENG-B	Additions · FR-A720-75K, 90K · FR-A740-0.4K to 160K
Sep., 2005	IB(NA)-0600225ENG-C	Additions FR-A740-185K to 500K Compatible with the FR-A7AP · Orientation control · Encoder feedback control · Vector control

⚠ For Maximum Safety

- Mitsubishi inverters are not designed or manufactured to be used in equipment or systems in situations that can affect or endanger human life.
- When considering this product for operation in special applications such as machinery or systems used in passenger transportation, medical, aerospace, atomic power, electric power, or submarine repeating applications, please contact your nearest Mitsubishi sales representative.
- Although this product was manufactured under conditions of strict quality control, you are strongly advised to install safety devices to prevent serious accidents when it is used in facilities where breakdowns of the product are likely to cause a serious accident.
- Please do not use this product for loads other than three-phase induction motors.