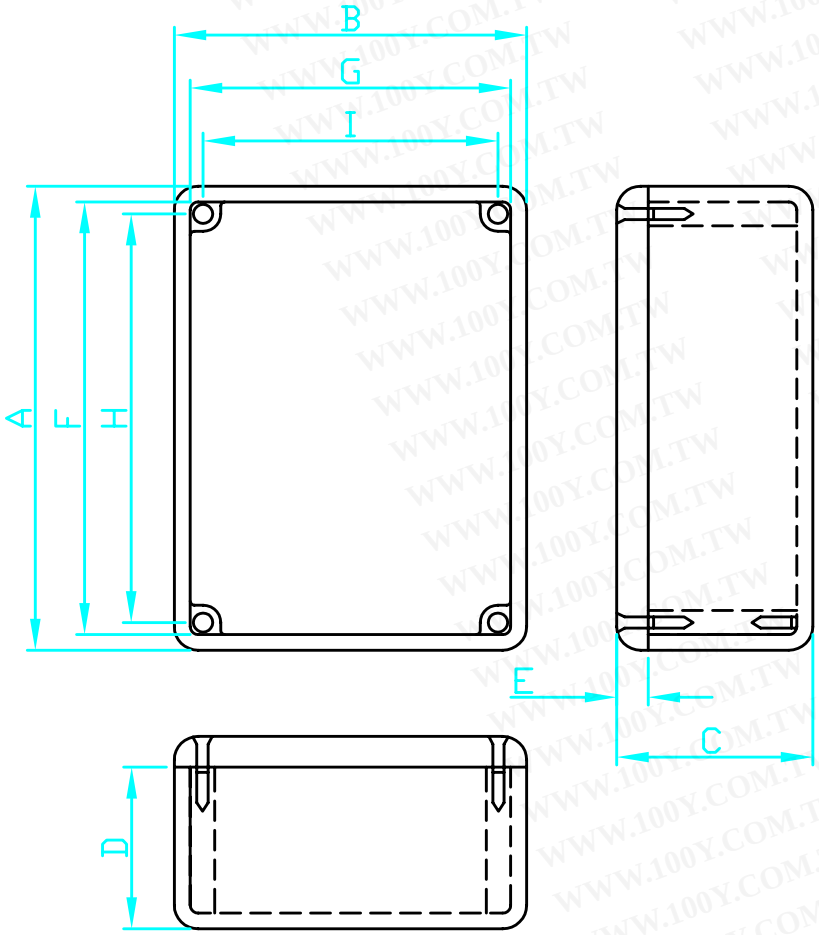

勝 特 力 材 料 886-3-5753170
胜特力电子(上海) 86-21-34970699
胜特力电子(深圳) 86-755-83298787
Http://www.100y.com.tw

DETAILED DIMENSION IN mm

PART NO.	A	B	C	D	E	F	G	H	I
G0123	90.0	38.0	30.0	26.0	4.0	86.6	34.6	82.5	28.6
G0124	111.0	60.0	30.0	26.0	4.0	107.2	56.2	101.6	50.8
G0234	119.0	93.5	56.5	52.5	4.0	114.2	88.7	109.5	84.1
G0470	50.8	50.8	31.8	27.8	4.0	47.4	47.4	41.2	41.2
G0471	110.0	82.5	44.5	40.5	4.0	105.2	77.7	100.5	73.0
G0472	120.5	80.0	59.2	55.2	4.0	115.7	75.2	111.1	70.5
G0473	119.0	93.5	34.0	30.0	4.0	114.2	88.7	109.5	84.2
G0474	120.5	120.5	59.2	55.2	4.0	115.7	115.7	111.1	111.1
G0475	120.5	120.5	95.2	91.2	4.0	115.7	115.7	111.1	111.1
G0479	111.0	60.0	54.0	50.0	4.0	107.2	56.2	101.6	50.8