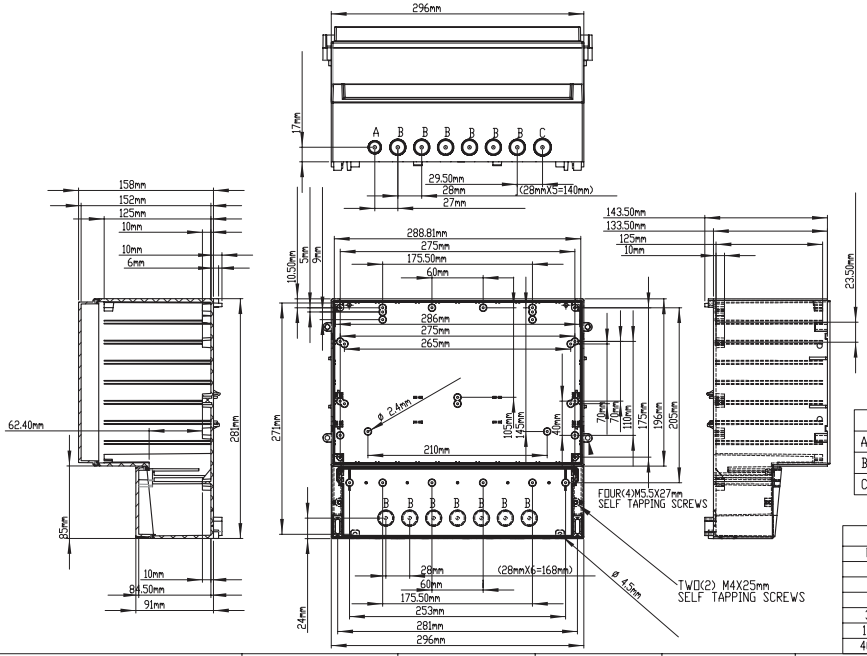

	DIMENSION	CABLE GLAND
A	15.6mm	PG 9(OR M12)
B	19.0mm	PG 11(OR M16)
C	20.8mm	PG 13.5(OR M20)

According to ISO 2768-m	
Measuring DIM=L	Tolerances
0.5(L<=3.0mm	±0.1mm
3.0(L<=6.0 mm	±0.1mm
6.0(L<=30.0 mm	±0.2mm
30.0(L<=120.0 mm	±0.3mm
120.0(L<=400.0 mm	±0.5mm
400.0(L<=1000.0 mm	±0.8mm

繪圖 DRA'D BY	日期 DATE	材質 MATE.	圖名TITLE:	圖號DWG NO:	版次REVISID:
JACKY	2012/04/13	ABS(HB)	DC009LGND DC009CBUND	1-1	A

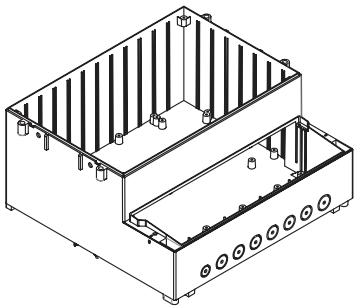

cabinets

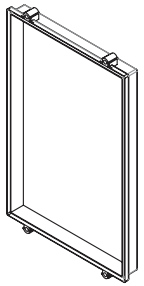

lid

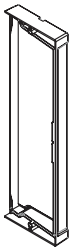

terminal compartment lid

ITEM	DESCRIPTION	DC009LGND MATERIAL	DC009LGND COLOUR	DC009LGND UNIT	DC009CBUND MATERIAL	DC009CBUND COLOUR	DC009CBUND UNIT
1	cabinets	ABS(HB)	GRAY	1	ABS(HB)	GRAY	1
2	lid	ABS(HB)	GRAY	1	PC(HB)	transparent Blue	1
3	terminal compartment lid	ABS(HB)	GRAY	1	ABS(HB)	GRAY	1

繪圖 DRA'D BY	日期 DATE	材質 MATE.	圖名TITLE:	圖號DWG NO:	版次REVISID:
JACKY	2012/04/13	ABS(HB)	DC009LGND DC009CBUND	1-2	A

勝特力電材超市-龍山店 886-3-5773766
勝特力電材超市-光復店 886-3-5729570
胜特力电子(上海) 86-21-34970699
胜特力电子(深圳) 86-755-83298787
http://www.100y.com.tw