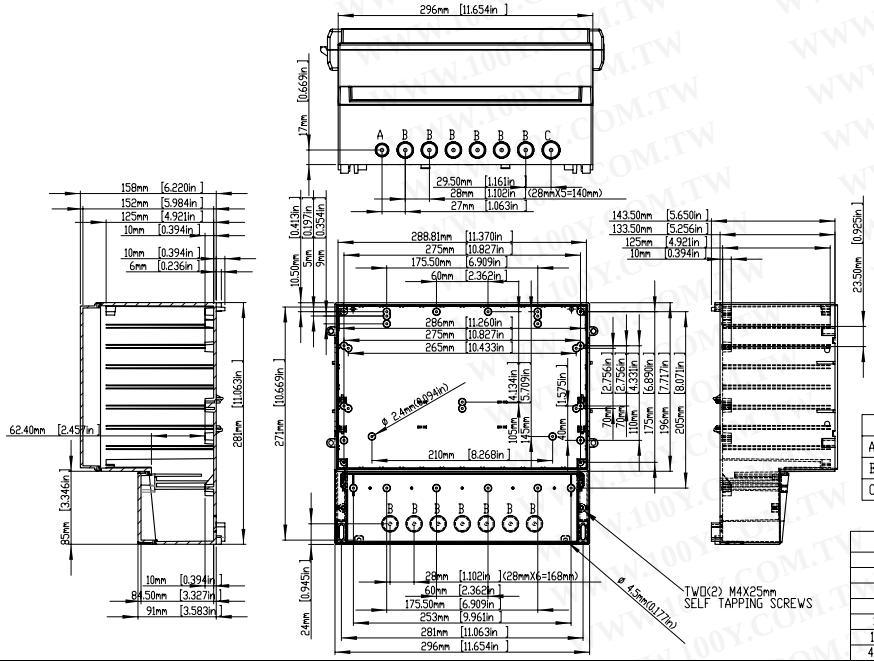

	DIMENSION	CABLE GLAND
A	15.6mm	PG 9(OR M12)
B	19.0mm	PG 11(OR M16)
C	20.8mm	PG 13.5(OR M20)

According to ISO 2768-m	
Measuring DIM=L	Tolerances
0.5<L<=3.0mm	±0.1mm
3.0<L<=6.0 mm	±0.1mm
6.0<L<=30.0 mm	±0.2mm
30.0<L<=120.0 mm	±0.3mm
120.0<L<=400.0 mm	±0.5mm
400.0<L<=1000.0 mm	±0.8mm

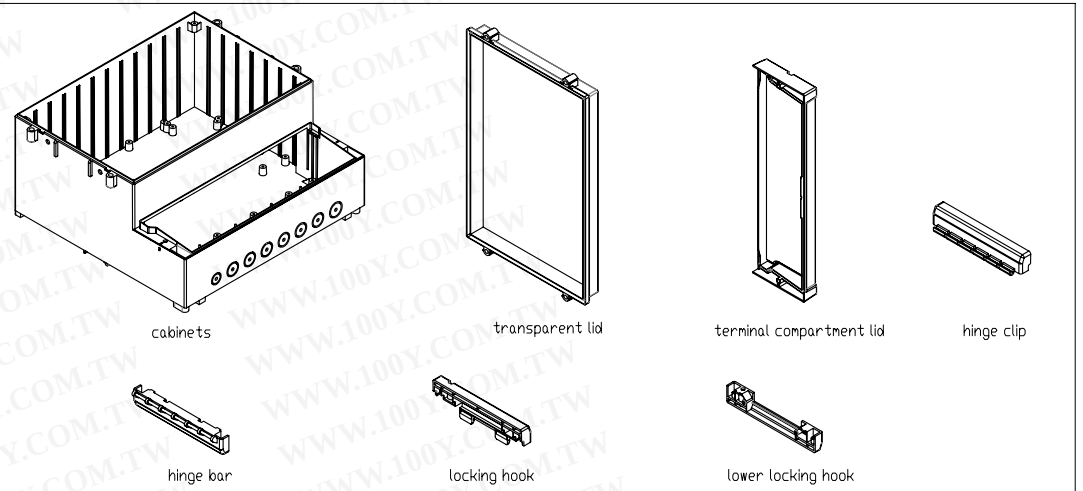

ITEM	DESCRIPTION	DC009CUL MATERIAL	DC009CUL COLOUR	DC009CUL UNIT	DC009CBU MATERIAL	DC009CBU COLOUR	DC009CBU UNIT
1	cabinets	PC+ABS(V0)	GRAY	1	ABS(HB)	GRAY	1
2	transparent lid	PC(V0)	CLEAR COVER	1	PC(HB)	transparent Blue	1
3	terminal compartment lid	PC+ABS(V0)	GRAY	1	ABS(HB)	GRAY	1
4	hinge clip	PC+ABS(V0)	GRAY	1	ABS(HB)	GRAY	1
5	hinge bar	PC+ABS(V0)	GRAY	1	ABS(HB)	GRAY	1
6	locking hook	PC+ABS(V0)	GRAY	1	ABS(HB)	GRAY	1
7	lower locking hook	PC+ABS(V0)	GRAY	1	ABS(HB)	GRAY	1

日期 DATE	材質 MATE.	圖名TITLE:	圖號DWG NO:	版次REVISID:
2012/04/13	PC+ABS(V0), ABS(HB)	DC009CUL DC009CBU	1-1	A

繪圖 DRA'D BY	日期 DATE	材質 MATE.	圖名TITLE:	圖號DWG NO:	版次REVISID:
JACKY	2012/04/13	PC+ABS(V0), ABS(HB)	DC009CUL DC009CBU	1-2	A

勝 特 力 材 料 886-3-5753170
胜特力电子(上海) 86-21-34970699
胜特力电子(深圳) 86-755-83298787
Http://www.100y.com.tw