勝 特 力 材 料 886-3-5753170
胜特力电子(上海) 86-21-34970699
胜特力电子(深圳) 86-755-83298787
Http://www.100y.com.tw

Intel® RealSense™ D400 Series Product Family

Datasheet

*Intel® **RealSense™ Vision Processor D4**, Intel® **RealSense™ Vision** Processor D4 Board, Intel® **RealSense™ Depth Module D400**, Intel® **RealSense™ Depth Module D410**, Intel® **RealSense™ Depth Module D415,** Intel® **RealSense™** Depth Camera D415, Intel® **RealSense™ Depth Module** D420, Intel® **RealSense™ Depth Module D430,** Intel® **RealSense™** Depth Camera D435*

Revision 003

July 2018

Document Number: 337029-003

Intel products described herein. You agree to grant Intel a non-exclusive, royalty-free license to any patent claim thereafter drafted which includes subject matter disclosed herein.

No license (express or implied, by estoppel or otherwise) to any intellectual property rights is granted by this document.

Intel technologies' features and benefits depend on system configuration and may require enabled hardware, software or service activation. Performance varies depending on system configuration. No computer system can be absolutely secure. Check with your system manufacturer or retailer or learn more at intel.com.

Intel technologies may require enabled hardware, specific software, or services activation. Check with your system manufacturer or retailer.

The products described may contain design defects or errors known as errata which may cause the product to deviate from published specifications. Current characterized errata are available on request.

Intel disclaims all express and implied warranties, including without limitation, the implied warranties of merchantability, fitness for a particular purpose, and non-infringement, as well as any warranty arising from course of performance, course of dealing, or usage in trade.

All information provided here is subject to change without notice. Contact your Intel representative to obtain the latest Intel product specifications and roadmaps.

Copies of documents which have an order number and are referenced in this document may be obtained by calling 1-800-548-4725 or visit www.intel.com/design/literature.htm.

Intel and the Intel logo, Intel® Core™, Intel® Atom™, trademarks of Intel Corporation in the U.S. and/or other countries.

*Other names and brands may be claimed as the property of others.

© 2018 Intel Corporation. All rights reserved.

Contents

1 Description and Features 10

2 Introduction 11

2.1 Purpose and Scope of this Document 11
2.2 Terminology 11
2.3 Stereo Vision Depth Technology Overview 12
2.4 Camera System Block Diagram 14
2.5 Intel® RealSense™ Depth Module D400 series Product SKUs 15
2.6 Intel® RealSense™ Depth Camera D400 series Product SKUs 16

3 Component Specification 17

3.1 Vision Processor D4 Camera System Components 17
3.2 Host Processor 17
3.3 Intel® RealSense™ Vision Processor D4 17
3.3.1 Vision Processor D4 Features 17
3.3.2 Vision Processor D4 Signal Description 18
3.3.3 Vision Processor D4 Package Mechanical Attributes 23
3.3.4 Vision Processor D4 Power Requirements 29
3.3.5 Vision Processor D4 Power Sequencing 29
3.3.6 Vision Processor D4 Spec Code 30
3.3.7 Vision Processor D4 Storage and Operating Conditions 30
3.3.8 Vision Processor D4 Thermals 31
3.4 Clock 31
3.5 Serial (SPI) Flash Memory 31
3.6 Stereo Depth Module 31
3.6.1 Left and Right Imagers 33
3.6.2 Infrared Projector 34
3.6.3 Color Sensor 35
3.6.4 Depth Module Connector 35
3.6.5 Stereo Depth Module Label 36
3.6.6 Stiffener 37
3.6.7 Temperature Sensor 37
3.6.8 Other Stereo Depth Module Components 37
3.6.9 Mechanical Dimensions 38
3.6.10 Stereo Depth Module Power Sequence 39
3.6.11 Stereo Depth Module Storage and Operating Conditions 39
3.7 Intel® RealSense™ Vision Processor D4 Board 40
3.7.1 Mechanical Dimensions 41
3.7.2 Depth Module Receptacle 41
3.7.3 Flex and Rigid Interposer Interconnect 41
3.7.4 External Sensor Sync Connector 45
3.7.5 USB Peripheral Connector – Type-C 46
3.7.6 Color Image Signal Processor (ISP) 47
3.7.7 Vision Processor D4 Board Power Requirements 48
3.7.8 Vision Processor D4 Board Thermals 48
3.7.9 Vision Processor D4 Board Storage and Operating Conditions 48
3.7.10 Intel® RealSense™ Vision Processor D4 Board Product Identifier and Material Code 49
3.8 Intel® RealSense™ Depth Camera D400 Series 49

3.8.1 Depth Camera D400 Series Mechanical Dimensions 50
3.8.2 Depth Camera D400 Series Thermals 51
3.8.3 Depth Camera D400 Series Storage and Operating Conditions 51
3.8.4 Depth Camera D400 Series Product Identifier and Material Code ... 51
3.8.5 Camera Lens Cleaning Procedure 51

4 Functional Specification 53
4.1 Vendor Identification (VID) and Device Identification (DID) 53
4.2 Vision Processor D4 Data Streams 53
4.3 Depth Field of View (FOV) 55
4.4 Minimum-Z Depth 56
4.5 Depth Quality Specification 56
4.6 Invalid Depth Band 57
4.7 Depth Start Point (Ground Zero Reference) 57
4.7.1 Depth Origin X-Y Coordinates 60
4.8 Depth Camera Functions 61
4.9 Color Camera Functions 62

5 Firmware 64
5.1 Update 64
5.1.1 Update Limits 64
5.2 Recovery 64

6 Software 65
6.1 Intel® RealSense™ Software Development Kit 2.0 65

7 System Integration 66
7.1 System Level Block Diagram 66
7.2 Vision Processor D4 System Integration 66
7.2.1 Vision Processor D4 Board 66
7.2.2 Vision Processor D4 on Motherboard 67
7.3 D4 Camera System Power Delivery 68
7.4 Vision Processor D4 Board for Integrated Peripheral 69
7.4.1 USB 3.1 Gen 1 Receptacle 69
7.4.2 USB 3.1 Gen 1 High Speed Cable Assembly 69
7.4.3 Transmit to Receive Crossover 70
7.4.4 Motherboard Receptacle 71
7.4.5 Vision Processor D4 Board for Integrated Peripheral Power Requirements 71
7.5 Thermals 71
7.6 Stereo Depth Module Flex 73
7.7 Stereo Depth Module Mounting Guidance 73
7.7.1 Screw Mount 73
7.7.2 Bracket Mount 74
7.7.3 Stereo Depth Module Air gap 76
7.8 Thermal Interface Material 76
7.9 Heat Sink 76
7.10 Cover Design and Material Guidance 76
7.11 Gaskets 77
7.11.1 Optical Isolation 78
7.11.2 Dust Protection 79
7.12 Firmware Recovery 79
7.13 Calibration Support 80

7.14 Multi-Camera Hardware Sync 80
7.15 Handling Conditions 81

8 Platform Design Guidelines 82
8.1 Vision Processor D4 on Motherboard 82
8.2 Kaby Lake U and Kaby Lake Y platforms 83
8.2.1 Kaby Lake Platform Introduction 83
8.2.2 Supported PCB Stack-Up and Routing Geometries 83
8.2.3 Vision Processor D4 on Motherboard with USB Host Interface 84
8.2.4 Vision Processor D4 on Motherboard with MIPI Host Interface 85
8.2.5 Vision Processor D4 Board for Integrated Peripheral (USB 3.1 Gen 1 Host to Vision Processor D4 Routing) 87
8.2.6 USB2.0 Design Guidelines (USB2 Host to Vision Processor D4 Routing) 88
8.3 Cherry Trail T4 Platform 89
8.3.1 Cherry Trail T4 Platform Introduction 89
8.3.2 Vision Processor D4 Platform Design Guidelines 89

9 Regulatory Compliance 90
9.1 System Laser Compliance 90
9.1.1 Certification Statement 90
9.1.2 Explanatory Label 90
9.1.3 Cautionary Statements 90
9.1.4 Manufacturer's Information 91
9.1.5 US FDA Accession Number 91
9.1.6 NRTL Statement 91
9.2 Ecology Compliance 92
9.2.1 China RoHS Declaration 92
9.2.2 Waste Electrical and Electronic Equipment (WEEE) 93

10 Mechanical Drawings 94

11 Connector Drawings 102

12 Appendix A – Vision Processor D4 on Motherboard Schematic Checklist 104
12.1 Power Delivery 111

13 Appendix B- Cover Material 114

Figures

Figure 2-1. Active Infrared (IR) Stereo Vision Technology 13
Figure 2-2. Depth Measurement (Z) versus Range (R) 13
Figure 2-3. Vision Processor D4 Camera System Block Diagram 14
Figure 3-1. Vision Processor D4 Package Drawing 25
Figure 3-2. Vision Processor D4 Ball-out 26
Figure 3-3. Vision Processor D4 Power Sequencing 30
Figure 3-4. Stereo Depth Module (Intel® RealSense™ Depth Module D410) 32
Figure 3-5. Stereo Depth Module (Intel® RealSense™ Depth Module D430) 32
Figure 3-6. Stereo Depth Module Power Sequence 39
Figure 3-7. Vision Processor D4 Board (USB Peripheral Type-C) 40
Figure 3-8. Flex Interposer (Illustration) 42
Figure 3-9. Rigid Interposer (Illustration) 42

Figure 3-10. Depth Module Receptacle and Plug Connector Pin Position 43
Figure 3-11. Depth Module Connector Orientation and Pin Position..... 45
Figure 3-12. USB Type-C Receptacle Pin Map 47
Figure 3-13. Intel® RealSense™ Depth Camera D415..... 49
Figure 3-14. Intel® RealSense™ Depth Camera D435..... 49
Figure 4-1. Left Invalid Depth Band 57
Figure 4-2. Depth Module Depth Start Point Reference 58
Figure 4-3. Depth Camera Depth Start Point Reference 59
Figure 4-4. Depth Module X-Y Depth Origin Reference..... 60
Figure 4-5. Depth Camera X-Y Depth Origin Reference 61
Figure 7-1. System Block Diagram..... 66
Figure 7-2. Intel® RealSense™ Vision Processor D4 Board 67
Figure 7-3. Vision Processor D4 on Motherboard (Illustration) 67
Figure 7-4. D4 Camera System Power Scheme..... 68
Figure 7-5. Host Motherboard USB 3.1 Gen 1 Routing 70
Figure 7-6. Receptacle Ground Bar Motherboard Connections..... 71
Figure 7-7. Bottom Stiffener Depth Module D410..... 73
Figure 7-8. Bottom Stiffener Depth Module D430..... 73
Figure 7-9. Stereo Depth Module Screw Mount 74
Figure 7-10. Stereo Depth Module Bracket..... 74
Figure 7-11. Stereo Depth Module Bracket Mount 75
Figure 7-12. Stereo Depth Module Bracket Install 75
Figure 7-13. Stereo Depth Module Air Gap 76
Figure 7-14. Illustration of Gasket Placement and Cover Material..... 78
Figure 7-15. Example of Light Leakage Effects..... 79
Figure 7-16. Firmware Recovery Sequence 80
Figure 7-17. External Sensor Sync Connector Location on D4 Vision Processor D4 Board 80
Figure 7-18. External Sensor Sync Connector Location on Depth Camera D435 81
Figure 8-1. Vision Processor D4 with USB Host Interface 82
Figure 8-2. Vision Processor D4 with MIPI Host Interface..... 82
Figure 8-3. Vision Processor D4 on Board for USB Integrated Peripheral 83
Figure 8-4. Host Processor - Vision Processor D4 84
Figure 8-5. Vision Processor D4 Transmit - Host Receive 85
Figure 8-6. Stereo Depth Transmit - Vision Processor D4 Receive 86
Figure 8-7. Flex Interposer PCB Stack-Up 87
Figure 8-8. USB 3.1 Gen 1 Host to Vision Processor D4 Topology..... 87
Figure 8-9. USB2.0 Host to Vision Processor D4..... 88
Figure 9-1. NRTL Certifications 92
Figure 10-1. Intel® RealSense™ Depth Module D400..... 94
Figure 10-2. Intel® RealSense™ Depth Module D410..... 95
Figure 10-3. Intel® RealSense™ Depth Module D415..... 96
Figure 10-4. Intel® RealSense™ Depth Module D420..... 97
Figure 10-5. Intel® RealSense™ Depth Module D430..... 98
Figure 10-6. Vision Processor D4 Board USB Type-C (Intel® RealSense™ Vision Processor D4 Board)..... 99
Figure 10-7. Intel® RealSense™ Depth Camera D415..... 100
Figure 10-8. Intel® RealSense™ Depth Camera D435..... 101
Figure 11-1. Receptacle Mechanical Drawing (50 Pin Depth Module Receptacle)..... 102
Figure 11-2. Plug Mechanical Drawing (50 pin Depth Module Plug)..... 103
Figure 12-1. Vision Processor D4 Laser PWM Reference Platform Schematic..... 111
Figure 12-2. Vision Processor D4 24MHz Crystal Clock Reference Platform Schematic..... 111
Figure 12-3. DC-DC Reference Platform Schematic (3.3V, 1.8V, 0.9V)..... 112
Figure 12-4. Vision Processor D4 VDD_PG and AVDD Reference Platform Schematic 113

Tables

Table 2-1. Depth Module Product SKU Descriptions 15
Table 2-2. Depth Camera Product SKU Descriptions 16
Table 3-1. Component Descriptions 17
Table 3-2. Vision Processor D4 Signal Descriptions 18
Table 3-3. Hardware Straps 23
Table 3-4. Vision Processor D4 Package Mechanical Attributes 24
Table 3-5. Vision Processor D4 Ball-out by Signal Name 26
Table 3-6. Vision Processor D4 Power Requirements 29
Table 3-7. Vision Processor D4 Power Sequencing Timing Parameters 29
Table 3-8. Vision Processor D4 SPEC Code 30
Table 3-9. Vision Processor D4 Storage and Operating Conditions 30
Table 3-10. Stereo Depth Module 31
Table 3-11. Stereo Depth Module SKU Properties 32
Table 3-12. Standard Left and Right Imager Properties 33
Table 3-13. Wide Left and Right Imager Properties 33
Table 3-14. Standard Infrared Projector Parameters 34
Table 3-15. Wide Infrared Projector Parameters 34
Table 3-16. Color Sensor Properties 35
Table 3-17. Depth Module 50-pin Connector Plug Details 36
Table 3-18. Stereo Depth Module Product Labeling 36
Table 3-19. Stereo Depth Module Label Fields 36
Table 3-20. Intel® RealSense™ Depth Module D400 Series Product Identifier Code and Product Material Code 37
Table 3-21. Other Stereo Depth Module Components 37
Table 3-22. Intel® RealSense™ Depth Module D400 Mechanical Dimensions 38
Table 3-23. Intel® RealSense™ Depth Module D410 Mechanical Dimensions 38
Table 3-24. Intel® RealSense™ Depth Module D415 Mechanical Dimensions 38
Table 3-25. Intel® RealSense™ Depth Module D420 Mechanical Dimensions 38
Table 3-26. Intel® RealSense™ Depth Module D430 Mechanical Dimensions 39
Table 3-27. Stereo Depth Module Storage and Operating Conditions 39
Table 3-28. Vision Processor D4 Board 40
Table 3-29. Vision Processor D4 Board Components 40
Table 3-30. Vision Processor D4 USB Type-C Board Mechanical Dimensions 41
Table 3-31. Depth Module Receptacle Details 41
Table 3-32. Interposer Interconnect Signal Description 43
Table 3-33. External Sensor Connector Details 46
Table 3-34. External Sensor Sync Connector Pin List 46
Table 3-35. USB Peripheral Connector Pin List 47
Table 3-36. ISP Properties 48
Table 3-37. Vision Processor D4 Board Power Requirements 48
Table 3-38. Vision Processor D4 Board Storage and Operating Conditions 48
Table 3-39. Vision Processor D4 Board Product Identifier and Material Code 49
Table 3-40. Depth Camera SKU properties 49
Table 3-41. Intel® RealSense™ Depth Camera D415 Mechanical Dimensions 50
Table 3-42. Intel® RealSense™ Depth Camera D435 Mechanical Dimensions 50
Table 3-43. Max Skin Temperature 51
Table 3-44. Depth Camera D400 Series Storage and Operating Conditions 51
Table 3-45. Depth Camera D400 Series Product Identifier and Material Code 51
Table 4-1. Vendor ID and Device ID Table 53
Table 4-2. Image Formats (USB 3.1 Gen1) 53
Table 4-3. Image Formats (USB 2.0) 54
Table 4-4. Simultaneous Image Streams (USB 3.1 Gen1 & USB2.0) 55

Table 4-5. Depth Field of View 55
Table 4-6. Minimum-Z Depth 56
Table 4-7. Depth Quality Specification 56
Table 4-8. Depth Module Depth Start Point 58
Table 4-9. Depth Cameras Depth Start Point 59
Table 4-10. Depth Module X-Y Depth Origin Coordinates 60
Table 4-11. Depth Camera X-Y Depth Origin Coordinates 61
Table 4-12. Depth Camera Controls 61
Table 4-13. RGB Exposed Controls 62
Table 7-1. USB 3.1 Gen 1 Receptacle Characteristics 69
Table 7-2. USB 3.1 Gen 1 Receptacle Pin Out 69
Table 7-3. USB 3.1 Gen 1 Plug Characteristics 69
Table 7-4. Cable Assembly Specification 70
Table 7-5. Motherboard Receptacle Properties 71
Table 7-6. Vision Processor D4 Board as Embedded Peripheral Power Requirements 71
Table 7-7. Vision Processor D4 Board – Component Power and TDP at Max Operating Mode(1) 72
Table 7-8. Stereo Depth Module (Standard) – Component Power and TDP at Max Operating Mode(1) 72
Table 7-9. Stereo Depth Module (Wide) – Component Power and TDP at Max Operating Mode(1) 72
Table 7-10. Vision Processor D4 Board Components – Case Temperature Limits (Still Air) 72
Table 7-11. Bracket Ordering Logistics 75
Table 7-12. Component Transmission 77
Table 7-13. Electrostatic Discharge Caution 81
Table 8-1. Host Transmit – Vision Processor D4 Receive Routing Guidelines 84
Table 8-2. Vision Processor D4 Transmit - Host Receive Routing Guidelines 84
Table 8-3. Vision Processor D4 Transmit – Host Receive Routing Guidelines 85
Table 8-4. Stereo Depth Module Transmit - Vision Processor D4 Receive Routing Guidelines 86
Table 8-5. USB 3.1 Gen 1 Host to Vision Processor D4 Routing Guidelines 88
Table 9-1. U.S. FDA Accession Number 91
Table 12-1. Vision Processor D4 on Motherboard Schematic Checklist 104
Table 12-2. Vision Processor D4 Decoupling and Filter Requirements 113
Table 13-1. Example: Cover Material Parameters 114

Revision History

Document Number	Revision Number	Description	Revision Date
337029	001	Initial release	January 2018
	002	Tracking Module 1 removal, NRTL certification, 7.2.2.1Firmware Update	March 2018
	003	•Added USB2.0 support •Removed VBUS0 from Table 3 6.Vision Processor D4 Power Requirements •Table 3 12. Standard Left and Right Imager Properties •Table 3 13. Wide Left and Right Imager Properties •Table 3 9. Vision Processor D4 Storage and Operating Conditions •Table 3 27 Stereo Depth Module Storage and Operating Conditions •Table 3 38. Vision Processor D4 Board Storage and Operating Conditions •Table 3 44. Depth Camera D400 Series Storage and Operating Conditions •Table 4 3. Image Formats (USB 2.0) •Table 4 5. Simultaneous Image Streams (USB3.1 Gen1, USB 2.0) • 4.7 Depth Origin Point (Ground Truth Zero) • 7.14 Multi-Camera hardware sync for multi-camera configuration	July 2018

§ §

1 Description and Features

Description

The Intel® RealSense™ D400 series is a stereo vision depth camera system. The subsystem assembly contains stereo depth module and vision processor with USB 2.0/USB 3.1 Gen 1 or MIPI[1] connection to host processor.

The small size and ease of integration of the camera sub system provides system integrators flexibility to design into a wide range of products.

The Intel® RealSense™ D400 series also offers complete depth cameras integrating vision processor, stereo depth module and RGB sensor with color image signal processing. The depth cameras are designed for easy setup and portability making them ideal for makers, educators, hardware prototypes and software development.

The Intel® RealSense™ D400 series is supported with cross-platform and open source Intel® RealSense™ SDK 2.0

Features

- 2nd Generation Stereo Depth Camera System
- 2nd Generation dedicated Intel® RealSense™ Vision Processor D4 with advanced algorithms
- Infrared (IR) Laser Projector System (Class 1)
- Full HD resolution Image sensors
- Active Power Management
- Selection of Stereo Depth Module options to meet your usage requirements

1. MIPI is not currently supported. Please contact your Intel representative on MIPI enablement timelines.

Usages/Markets

- Drones
- Robots
- Home and Surveillance
- Virtual Reality
- PC Peripherals

Minimum System Requirements

USB 2.0/USB 3.1 Gen 1

Ubuntu*16.xx/Windows*10

Intel® **RealSense™ Depth Camera D415** Features

- Intel® RealSense™ Vision Processor D4
- Up to 1280x720 active stereo depth resolution
- Up to 1920x1080 RGB resolution
- Depth Diagonal Field of View over 70°
- Dual rolling shutter sensors for up to 90 FPS depth streaming
- Range 0.3m to over 10m (Varies with lighting conditions)

Intel® **RealSense™ Depth Camera D435** Features

- Intel® RealSense™ Vision Processor D4
- Up to 1280x720 active stereo depth resolution
- Up to 1920x1080 RGB resolution
- Depth Diagonal Field of View over 90°
- Dual global shutter sensors for up to 90 FPS depth streaming
- Range 0.2m to over 10m (Varies with lighting conditions)

§ §

2 Introduction

2.1 Purpose and Scope of this Document

This document captures the specifications and the design–in details for the Intel® RealSense™ D400 series family of products. This document provides information necessary to understand and implement an Intel® RealSense™ D400 series based camera system.

Note: Intel® RealSense™ D400 series is alternately referred as "D4 Camera System" in this document. Intel® RealSense™ Vision Processor D4 is alternately referred as "D4" in this document.

2.2 Terminology

Term	Description
6DOF	Six degrees of freedom (6DoF) refers to the freedom of movement of a rigid body in three-dimensional space. Forward/back, up/down, left/right, pitch, yaw, roll
Stereo Depth Baseline	The distance between the center of the left and right imagers in a stereo camera
MIPI CSI-2	The Camera Serial Interface (CSI) is a specification of the Mobile Industry Processor Interface (MIPI) Alliance and CSI-2 is the 2nd generation specification defining the interface between a camera and a host processor
Depth	Depth video streams are like color video streams except each pixel has a value representing the distance away from the camera instead of color information
D4 (DS5)	If the term D4 is used alone, it refers to the entire D4 camera system consisting of various modules and components. If the term D4 is used with an appropriate qualifier (i.e. D4 Vision Processor, D4 Vision Processor Board), it refers to the specific module or component within the D4 camera system.
FOV	Field Of View (FOV) describes the angular extent of a given scene that is imaged by a camera. A camera's FOV can be measured horizontally, vertically, or diagonally
Host System	Computer or SOC connected to D4 camera
I2C	I²C (Inter-Integrated Circuit), pronounced I-squared-C, is a multi-master, multi-slave, single-ended, serial computer bus invented by Philips Semiconductor (now NXP Semiconductors). It is typically used to allow easy control and data communication between components.
IR Projector	This refers to the source of infrared (IR) light used for illuminating a scene, object, or person to collect depth data.

Term	Description
Imagers	Depth camera system uses a pair of cameras referred as imagers to calculate depth. They are identical cameras configured with identical settings.
Image Signal Processor (ISP)	Image processing functions to enhance color image quality
Left imager	From the perspective of the stereo camera looking out at the world, the left imager is on the left side of the camera module. Thus, when the user is facing the D4 camera, the left imager is actually on the right side of the camera module.
Lens	This refers to the optical component of an imager in the D4 camera. Its purpose is to focus the incoming light rays onto the CMOS chip in the imager.
MIPI	MIPI (Mobile Industry Processor Interface) is a global, open membership organization that develops interface specifications for the mobile ecosystem
Platform camera	This refers to the two-dimensional (2D) color camera on platform
System On Chip (SoC)	Integrated circuit (IC) that integrates all components of a computer
Stereo Depth Module	This refers to a stiffened module containing at least two imagers. The distance between the imagers, which is referred to as the baseline or intraocular spacing, is typically in the range of 20 mm to 70 mm.
Stereo camera	This refers to a pair of imagers looking at the same subject from slightly different perspectives. The difference in the perspectives is used to generate a depth map by calculating a numeric value for the distance from the imagers to every point in the scene.
SKU	Stock Keeping Unit (SKU) is a unique identifier for distinct products. It is often used in the scope of naming different versions of a device
TBD	To Be Determined. In the context of this document, information will be available in a later revision.

2.3 Stereo Vision Depth Technology Overview

The Intel® RealSense™ D400 series depth camera uses stereo vision to calculate depth. The stereo vision implementation consists of a left imager, right imager, and an optional infrared projector. The infrared projector projects non-visible static IR pattern to improve depth accuracy in scenes with low texture. The left and right imagers capture the scene and sends imager data to the depth imaging (vision) processor, which calculates depth values for each pixel in the image by correlating points on the left image to the right image and via shift between a point on the Left image and the Right image. The depth pixel values are processed to generate a depth frame. Subsequent depth frames create a depth video stream.

Figure 2-1. Active Infrared (IR) Stereo Vision Technology

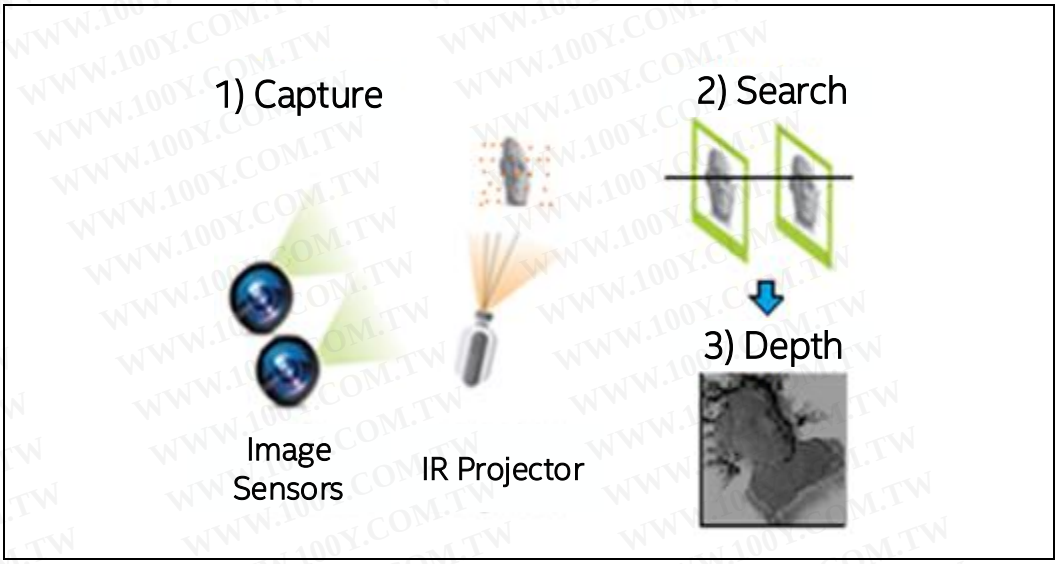

The depth pixel value is a measurement from the parallel plane of the imagers and not the absolute range as illustrated.

Figure 2-2. Depth Measurement (Z) versus Range (R)

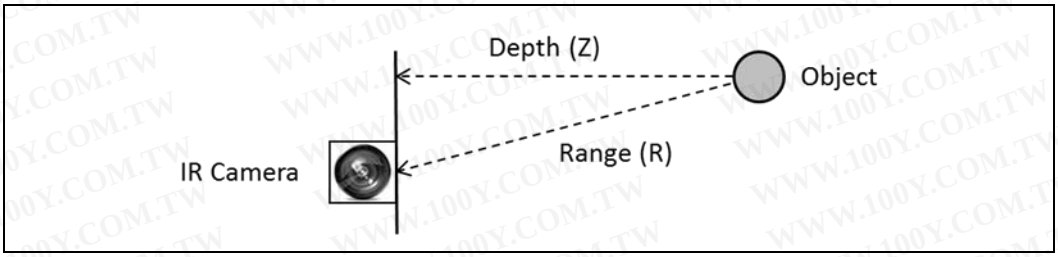

2.4 Camera System Block Diagram

The camera system has two main components, Vision processor D4 and Depth module. The Vision processor D4 is either on the host processor motherboard or on a discrete board with either USB2.0/USB 3.1 Gen1 or MIPI connection to the host processor. The Depth module incorporates left and right imagers for stereo vision with the optional IR projector and RGB color sensor. The RGB color sensor data is sent to vision processor D4 via the color Image Signal Processor (ISP) on Host Processor motherboard or D4 Board.

Figure 2-3. Vision Processor D4 Camera System Block Diagram

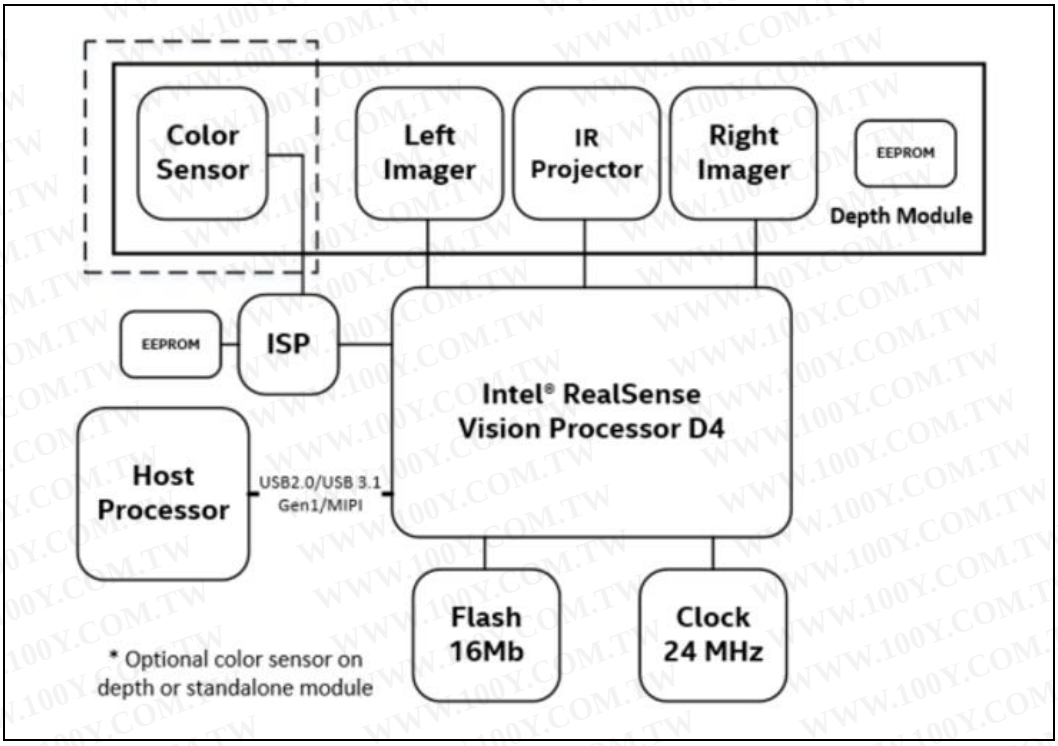

2.5 Intel® **RealSense™** Depth Module D400 series Product SKUs

Table below describes main components that make up the different depth module SKUs

Table 2-1. Depth Module Product SKU Descriptions

Component	Subcomponent	D400	D410	D415	D420	D430
Intel® RealSense™ Vision Processor D4	-	√	√	√	√	√
Intel® RealSense™ Depth Module	Standard Stereo Imagers	√	√	√	X	X
	Wide Stereo Imagers	X	X	X	√	√
	Standard Infrared Projector	X	√	√	X	X
	Wide Infrared Projector	X	X	X	X	√
	RGB color sensor	X	X	√	X	X

D400 - Intel® RealSense™ Depth Module D400
D410 - Intel® RealSense™ Depth Module D410
D415 - Intel® RealSense™ Depth Module D415
D420 - Intel® RealSense™ Depth Module D420
D430 - Intel® RealSense™ Depth Module D430

2.6 Intel® RealSense™ Depth Camera D400 series Product SKUs

Table below describes main components that make up the different camera SKUs:

Table 2-2. Depth Camera Product SKU Descriptions

Component	Subcomponent	Intel® RealSense™ Depth Camera D415	Intel® RealSense™ Depth Camera D435
Intel® RealSense™ Vision Processor D4	-	√	√
Intel® RealSense™ Depth Module	Standard Stereo Imagers	√	X
	Wide Stereo Imagers	X	√
	Standard Infrared Projector	√	X
	Wide Infrared Projector	X	√
	RGB color sensor	√	√

§ §

3 Component Specification

3.1 Vision Processor D4 Camera System Components

Table 3-1. Component Descriptions

Component	Description
Host Processor	Host Processor that receives Depth and other data streams from Vision Processor D4
Vision Processor D4 (DS5 ASIC)	Depth Imaging Processor with USB 2.0/USB 3.1 Gen 1 or MIPI interface connection to Host Processor
Clock	24MHz clock source for Vision Processor D4
Serial Flash Memory	SPI 16Mb Serial Flash memory for firmware storage
Stereo Depth Module	Camera module with left and Right Imager, Color Sensor†, IR projector† enclosed in a stiffener
Power Delivery	Circuitry on motherboard/Vision processor D4 Board to deliver and manage power to Vision Processor D4 and Stereo Depth Module.
Stereo Depth Connector and Interposer	50 pin connector on motherboard/Vision Processor D4 Board and Stereo Depth module with interposer for connection

(†) SKU dependent

3.2 Host Processor

The host processor interface to Vision Processor D4 is either USB 2.0/USB 3.1 Gen 1 or MIPI. To ensure the best of quality of service, the Vision Processor D4 must be connected to a dedicated USB 3.1 Gen 1 root port within the host processor system.

3.3 Intel® RealSense™ Vision Processor D4

The primary function of Vision Processor D4 is to perform depth stereo vision processing. The Vision Processor D4 on Host Processor motherboard or on Vision Processor D4 Board communicates to the host processor through USB2.0/USB 3.1 Gen 1 or MIPI and receives sensor data from stereo depth module. The Vision Processor D4 supports MIPI CSI-2 channels for connection to image sensors.

3.3.1 Vision Processor D4 Features

- 28nm Process Technology.

- 5 MIPI camera ports with each MIPI lane capable of handling data transfers of up to 750 Mbps.
- USB2.0/USB 3.1 Gen 1 or MIPI interface to host system.
- Image rectification for camera optics and alignment compensation
- IR Projector (Laser) controls
- Serial Peripheral Interface for fast data transfer with external SPI flash.
- Integrated I2C ports
- General purpose Input Output pins
- Active power gating

3.3.2 Vision Processor D4 Signal Description

Table 3-2. Vision Processor D4 Signal Descriptions

RESERVED – Signal reserved for future usage

IO Type- Input Output Buffer type

A – Analog

I – Input

O - Output

Signal Name	Description	IO Type	After RESET
Host MIPI			
H_DATAP0 H_DATAN0	Host MIPI Data Lane 0 Differential Pair	A	I
H_DATAP1 H_DATAN1	Host MIPI Data Lane 1 Differential Pair	A	I
H_DATAP2 H_DATAN2	Host MIPI Data Lane 2 Differential Pair	A	I
H_DATAP3 H_DATAN3	Host MIPI Data Lane 3 Differential Pair	A	I
H_CLKP H_CLKN	Host MIPI Clock Differential Transmit Pair	A	I
H_SDA H_SCL	Host I2C Bus Data and Clock	I/O	IO
H_REXT	Host MIPI External Reference 6.04K 1% resistor pull down to ground)	A	I
Imager A MIPI			
A_DATAP0 A_DATAN0	Imager A MIPI Data Lane 0 Differential Receive Pair	A	I
A_DATAP1 A_DATAN1	Imager A MIPI Data Lane 1 Differential Receive Pair	A	I

Signal Name	Description	IO Type	After RESET
A_CLKP A_CKLN	Imager A MIPI Clock Differential Receive Pair	A	I
A_SDA A_SCL	Imager A I2C Bus Data and Clock	I/O	IO
A_RCLK	Imager A Reference Clock	I/O	O
A_PDOWN	(RESERVED) Imager A Power Down Signal	I/O	O
A_VSYNC	Imager A Vertical/Frame Sync	I/O	I
A_RESETN	Imager A Reset	I/O	O
A_REXT	Imager A MIPI External Reference (6.04K 1% resistor pull down to ground)	A	I
Imager B MIPI			
B_DATAP0 B_DATAN0	(RESERVED) Imager B MIPI Data Lane 0 Differential Receive Pair	A	I
B_DATAP1 B_DATAN1	(RESERVED) Imager B MIPI Data Lane 1 Differential Receive Pair	A	I
B_CLKP B_CKLN	(RESERVED) Imager B MIPI Clock Differential Receive Pair	A	I
B_SDA B_SCL	(RESERVED) Imager B I2C Bus Data and Clock	I/O	IO
B_RCLK	(RESERVED) Imager B Reference Clock	I/O	O
B_PDOWN	(RESERVED) Imager B Power Down	I/O	O
B_VSYNC	(RESERVED) Imager B Vertical/Frame Sync	I/O	I
B_RESETN	(RESERVED) Imager B Reset	I/O	O
B_REXT	Imager B MIPI External Reference (6.04K 1% resistor pull down to ground)	A	I
Imager M MIPI			
M_DATAP0 M_DATAN0	Imager M MIPI Data Lane 0 Differential Receive Pair	A	I
M_DATAP1 M_DATAN1	Imager M MIPI Data Lane 1 Differential Receive Pair	A	I
M_CLKP M_CKLN	Imager M MIPI Clock Differential Receive Pair	A	I
M_SDA M_SCL	Imager M I2C Bus Data and Clock	I/O	IO
M_RCLK	Imager M Reference Clock	I/O	O
M_PDOWN	(RESERVED) Imager M Power Down	I/O	O
M_VSYNC	Imager M Vertical/Frame Sync	I/O	I

Signal Name	Description	IO Type	After RESET
M_RESETN	Imager M Reset	I/O	O
M_REXT	Imager M MIPI External Reference (6.04K 1% resistor pull down to ground)	A	I
Imager Y MIPI			
Y_DATAP0 Y_DATAN0	Imager Y MIPI Data Lane 0 Differential Receive Pair	A	I
Y_DATAP1 Y_DATAN1	Imager Y MIPI Data Lane 1 Differential Receive Pair	A	I
Y_CLKP Y_CKLN	Imager Y MIPI Clock Differential Receive Pair	A	I
Y_SDA Y_SCL	Imager Y I2C Bus Data and Clock	I/O	IO
Y_RCLK	Imager Y Reference Clock	I/O	O
Y_PDOWN	(RESERVED) Imager Y Power Down	I/O	O
Y_VSYNC	Imager Y Vertical/Frame Sync	I/O	I
Y_RESETN	Imager Y Reset	I/O	O
Y_REXT	Imager Y MIPI External Reference (6.04K 1% resistor pull down to ground)	A	I
Imager Z MIPI			
Z_DATAP0 Z_DATAN0	(RESERVED) Imager Z MIPI Data Lane 0 Differential Receive Pair	A	I
Z_DATAP1 Z_DATAN1	(RESERVED) Imager Z MIPI Data Lane 1 Differential Receive Pair	A	I
Z_CLKP Z_CKLN	(RESERVED) Imager Z MIPI Clock differential Receive Pair	A	I
Z_SDA Z_SCL	(RESERVED) Imager Z I2C Bus Data and Clock	I/O	IO
Z_RCLK	(RESERVED) Imager Z Reference Clock	I/O	O
Z_PDOWN	(RESERVED) Imager Z Power Down	I/O	O
Z_VSYNC	Depth Vertical/Frame Sync	I/O	O
Z_RESETN	(RESERVED) Imager Z Reset	I/O	O
Z_REXT	Imager Z MIPI External Reference (6.04K 1% resistor pull down to ground)	A	I
Serial Peripheral Interconnect (SPI)			
SPI_DI	SPI Data Input	I/O	I
SPI_DO	SPI Data Output	I/O	O
SPI_CLK	SPI Clock	O	O

Signal Name	Description	IO Type	After RESET
SPI_CS	SPI Chip Select	O	O
SPI_WP	Flash Write Protect	O	O
General Purpose Input Output (GPIO)			
GPIO[0]	(RESERVED) Not Defined	I/O	I
GPIO[1]	(RESERVED) Not Defined	I/O	I
GPIO[2]	Laser PWM – Controls Laser Power for IR projector on Stereo Module	I/O	O
GPIO[3]	(RESERVED) Not Defined	I/O	I
GPIO[4]	(RESERVED) Not Defined	I/O	I
GPIO[5]	(RESERVED) Not Defined	I/O	I
GPIO[6]	(RESERVED) Not Defined	I/O	I
GPIO[7]	(RESERVED) Not Defined	I/O	I/O
EGPIO[0]	(RESERVED) Not Defined	I/O	I/O
EGPIO[1]	(RESERVED) Not Defined	I/O	I/O
EGPIO[2]	(RESERVED) Not Defined	I/O	I/O
EGPIO[3]	Laser_PWRDN - IR projector Power Down Signal	I/O	O
EGPIO[4]	(RESERVED) Not Defined	I/O	I/O
EGPIO[5]	FLAGB – IR Projector Fault Detect	I/O	I
EGPIO[6]	(RESERVED) Not Defined	I/O	I/O
EGPIO[7]	(RESERVED) Not Defined	I/O	I/O
EGPIO[8]	ISP_FCS (Color ISP)	I/O	O
EGPIO[9]	(RESERVED) Not Defined	I/O	I/O
EGPIO[10]	(RESERVED) Not Defined	I/O	I/O
EGPIO[11]	(RESERVED) Not Defined	I/O	I/O
EGPIO[12]	(RESERVED) Not Defined	I/O	I/O
EGPIO[13]	(RESERVED) - For Intel test purpose only	I/O	I/O
Miscellaneous			
LD_ON_OUT_XX	(RESERVED) Laser Enable	O	O
MODSTROB	(RESERVED) Modulation current strobe	O	O
MODSIGN	(RESERVED) Modulation current sign	O	O
LD_ERR	Laser Error (Active High)	I	I
CLKXI	24MHz XTAL	I	I
CLKXO	24MHz XTAL	I	I
PRSTN	D4 Reset	I	I
CW_CSR_PRSTn	Hardware reset without debug port reset	I/O	I

Signal Name	Description	IO Type	After RESET
PMU_PWR_EN	Switchable domain (VDD_PG) power control signal	I/O	O
DFU	Dynamic FW update, used for FW recovery	I/O	I
ISP_SCL ISP_SDA	I2C Bus Data and Clock	I/O	IO
VQPSQ	(RESERVED) – For Intel test purpose only	O	O
VQPSM	(RESERVED) – For Intel test purpose only	O	O
REFPADCLKP	(RESERVED) – For Intel test purpose only	I	I
REFPADCLKM	(RESERVED) – For Intel test purpose only	I	I
JTAG			
TDI	Test Data Input	I/O	I
TDO	Test Data Output	I/O	O
TCLK	Test Clock Input	I/O	I
TMS	Test Mode Select	I/O	I
TRSTN	Test Reset	I/O	I
USB			
USB_RXP	USB 3.1 Gen 1 receive, positive side	A	I
USB_RXN	USB 3.1 Gen 1 receive, negative side	A	I
USB_TXP	USB 3.1 Gen 1 Transmit, positive side	A	O
USB_TXN	USB 3.1 Gen 1 Transmit, negative side	A	O
USB_DP	USB 2.0 D+ line	A	IO
USB_DN	USB 2.0 D- line	A	IO
USB_ID	Mini-receptacle identifier and test point		
USB_RESREF	Reference Resistor input. 200 Ohm 1%	A	I
Power and Ground			
VDD	0.9V (Core Voltage)	Power	
VDD_PG	0.9V (Switched Core Voltage)	Power	
USB_DVDD	0.9V (USB Core Voltage)	Power	
VPTX0	0.9V (USB Core Voltage)	Power	
VP	0.9V (USB Core Voltage)	Power	
*_AVDD	1.8V (MIPI Core and IO Voltage)	Power	
VDDPLL	0.9V (PLL Voltage)	Power	
VDDTS	1.8V (Temperature Sensor Voltage)	Power	
VDDPST18	1.8V (IO Voltage)	Power	
USB_VDD330	3.3V (USB Core Voltage)	Power	

Signal Name	Description	IO Type	After RESET
VBUS0	3.3V (VBUS power monitor)	Power	
VSS	Ground	GND	
*_AGND	Ground	GND	

Table 3-3. Hardware Straps

Pin	Boot Load	HW/FW	Description
EPGPIO0	No	FW	USB connection type: 0: Peripheral (default) 1: Integrated
EGPIO4	Yes	HW	SPI Interface: 0: SPI on "Z" 1: SPI connected (default)
EPGPIO7 EPGPIO8	Yes	FW	Flash 00: 64Mbit 01: 8Mbit 10: 16 Mbit (default) 11: 32 Mbit
EPGPIO9	No	FW	Host interface: 0: USB (default) 1: MIPI
EPGPIO10	No	FW	Board version [0] (default: 0)
EPGPIO11	No	FW	Board version [1] (default: 0)
EPGPIO12	No	FW	Board version [2] (default: 0)
DFU	Yes	HW	Go to DFU 0: Disabled (default) 1: Go to DFU mode (Recovery)

NOTES:

- Boot Load – Read during Boot
- Hardware (HW) Strap – External hardware pin state directly configures D4 functionality
- Firmware (FW) Strap – External hardware pin state is read by firmware and firmware configures D4 functionality

3.3.3 Vision Processor D4 Package Mechanical Attributes

Table below provides an overview of the mechanical attributes of the package.

Table 3-4. Vision Processor D4 Package Mechanical Attributes

Pin	Boot Load	HW/FW
Package Technology	Package Type	FlipChip CSP (Chip Scale Package)
	Interconnect	Ball Grid Array (BGA) Ball
	Lead Free	Yes
	Halogenated Flame Retardant Free	Yes
Package Configuration	Solder Ball Composition	SAC125Ni
	Ball/Pin Count	225 solder balls
	Grid Array Pattern	15 x 15
Package Dimensions	Nominal Package Size (mm)	6.40 x 6.40
	Min Ball/Pin pitch (mm)	0.42
Weight		~1 gm

Figure 3-1. Vision Processor D4 Package Drawing

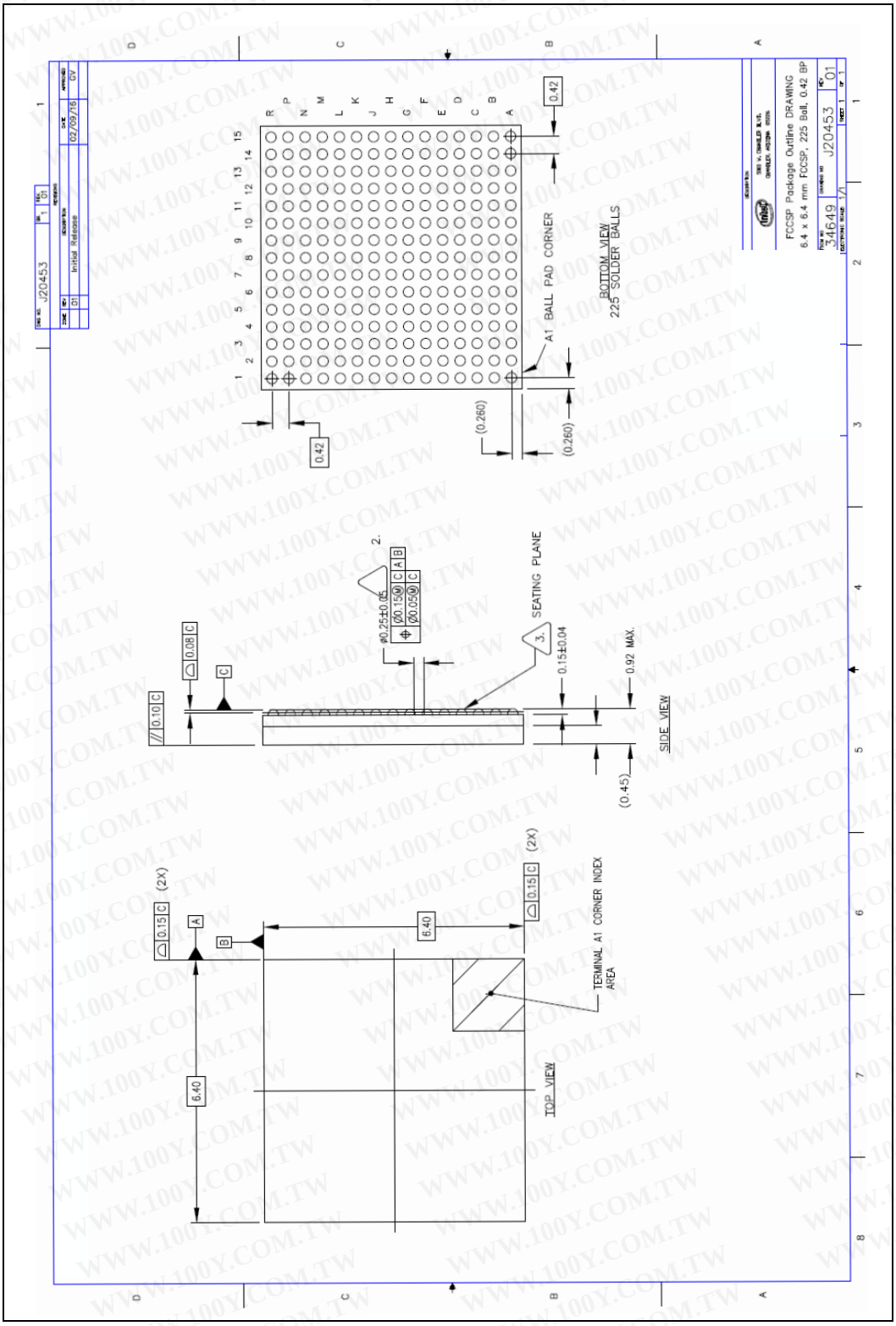

Figure 3-2. Vision Processor D4 Ball-out

	A	B	C	D	E	F	G	H	J	K	L	M	N	P	R	
15	VSS	Y_DATAN0	Y_REXT	Y_SCL	GPIO_0	GPIO_1	GPIO_5	GPIO_6	MODSTROB	TMS	TRSTN	SPI_WPN	SPI_MISO	CW_CSR_RSTN	VSS	15
14	Y_CLKN	Y_CLKP	Y_DATAP0	Y_RCLK	Y_SDA	Y_RESETN	GPIO_2	GPIO_3	MODSIGN	TCLK	TDO	SPI_CLK	SPI_MOSI	Z_RESETN	Z_VSYNC	14
13	Y_DATAN1	Y_DATAP1	VSS	VSS	Y_PDOWN	Y_VSYNC	GPIO_4	GPIO_7	LD_ERR	LD_ON_OUT_XX	TDI	SPI_CS	Z_SDA	Z_DATAP0	Z_RCLK	13
12	B_DATAN0	B_SCL	B_SDA	Y_AVDD	VSS	VSS	VDDPST18_LEFT	VSS	VSS	VDDPST18_LEFT	VSS	VSS	Z_SCL	Z_CLKP	Z_DATAN0	12
11	B_CLKN	B_DATAP0	B_REXT	VSS	VSS	VSS	VDD	VDD	VDD	VSS	VSS	Z_AVDD	Z_PDOWN	Z_DATAP1	Z_CLKN	11
10	B_DATAN1	B_CLKP	B_RESETN	B_AVDD	VDD_PG	VDD_PG	VDD_PG	VDD	VDD	VDD_PG	VDD_PG	ISP_SCL	Z_REXT	M_DATAP1	Z_DATAN1	10
9	H_DATAN3	B_DATAP1	B_PDOWN	VSS	VDD_PG	VDD_PG	VDD_PG	VSS	VSS	VDD_PG	VDD_PG	VSS	ISP_SDA	M_CLKP	M_DATAN1	9
8	H_DATAN2	H_DATAP3	B_VSYNC	VSS	VSS	VDD_PG	VDD_PG	VSS	VSS	VSS	VSS	VSS	VSS	M_DATAP0	M_CLKN	8
7	H_CLKN	H_DATAP2	B_RCLK	H_AVDD	VSS	VSS	VSS	VSS	VSS	VDD_PG	VDD_PG	M_AVDD	M_RESETN	M_PDOWN	M_DATAN0	7
6	H_DATAN1	H_CLKP	H_AVDD	REFPADCLKP	REFPADCLKM	VSS	VDD	VDD	VSS	VDD_PG	VDD_PG	M_REXT	M_VSYNC	M_SDA	M_RCLK	6
5	H_DATAN0	H_DATAP1	H_REXT	VP	USB_ID	VDD	VDD	VDD	VSS	VSS	VSS	VSS	VSS	A_DATAP1	M_SCL	5
4	H_SCL	H_DATAP0	USB_VDD330	VPTX0	USB_RESREF	USB_DVDD	VSS	VSS	VDDPST18_RIGHT	VSS	VSS	A_AVDD	A_REXT	A_CLKP	A_DATAN1	4
3	USB_RXN	H_SDA	PRSTN	USB_DP	EGPIO_1	EGPIO_11	VDDTS	VSSTS	VDDPST18_RIGHT	PMU_PWR_EN	VQPSQ	VQPSM	A_PDOWN	A_DATAP0	A_CLKN	3
2	USB_TXN	USB_RXP	DFU	USB_DN	EGPIO_9	EGPIO_13	VDDPLL	VSSPLL	EGPIO_5	EGPIO_12	EGPIO_3	EGPIO_4	A_SCL	A_RCLK	A_DATAN0	2
1	VSS	USB_TXP	VBUS0	EGPIO_6	EGPIO_7	EGPIO_8	CLK_XIN	CLK_XOUT	EGPIO_10	EGPIO_2	EGPIO_0	A_VSYNC	A_SDA	A_RESETN	VSS	1
	A	B	C	D	E	F	G	H	J	K	L	M	N	P	R	

Table 3-5. Vision Processor D4 Ball-out by Signal Name

Ball	Name	Ball	Name	Ball	Name
A01	H_AGND	B01	USB_TXP	C01	VBUS0
A02	USB_TXN	B02	USB_RXP	C02	DFU
A03	USB_RXN	B03	H_SDA	C03	PRSTN
A04	H_SCL	B04	H_DATAP0	C04	USB_VDD330
A05	H_DATAN0	B05	H_DATAP1	C05	H_REXT
A06	H_DATAN1	B06	H_CLKP	C06	H_AVDD
A07	H_CLKN	B07	H_DATAP2	C07	B_RCLK

Ball	Name	Ball	Name	Ball	Name
A08	H_DATAN2	B08	H_DATAP3	C08	B_VSYNC
A09	H_DATAN3	B09	B_DATAP1	C09	B_PDOWN
A10	B_DATAN1	B10	B_CLKP	C10	B_RESETN
A11	B_CLKN	B11	B_DATAP0	C11	B_REXT
A12	B_DATAN0	B12	B_SCL	C12	B_SDA
A13	Y_DATAN1	B13	Y_DATAP1	C13	Y_AGND
A14	Y_CLKN	B14	Y_CLKP	C14	Y_DATAP0
A15	Y_AGND	B15	Y_DATAN0	C15	Y_REXT
D01	EGPIO_6	E01	EGPIO_7	F01	EGPIO_8
D02	USB_DN	E02	EGPIO_9	F02	EGPIO_13
D03	USB_DP	E03	EGPIO_1	F03	EGPIO_11
D04	VPTX0	E04	USB_RESREF	F04	USB_DVDD
D05	VP	E05	USB_ID	F05	VDD
D06	REFPADCLKP	E06	REFPADCLKM	F06	VSS
D07	H_AVDD	E07	H_AGND	F07	VSS
D08	B_AGND	E08	VSS	F08	VDD_PG
D09	B_AGND	E09	VDD_PG	F09	VDD_PG
D10	B_AVDD	E10	VDD_PG	F10	VDD_PG
D11	VSS	E11	VSS	F11	VSS
D12	Y_AVDD	E12	VSS	F12	VSS
D13	VSS	E13	Y_PDOWN	F13	Y_VSYNC
D14	Y_RCLK	E14	Y_SDA	F14	Y_RESETN
D15	Y_SCL	E15	GPIO_0	F15	GPIO_1
G01	CLK_XIN	H01	CLK_XOUT	J01	EGPIO_10
G02	VDDPLL	H02	VSSPLL	J02	EGPIO_5
G03	VDDTS	H03	VSSTS	J03	VDDPST18_RIGHT
G04	VSS	H04	VSS	J04	VDDPST18_RIGHT
G05	VDD	H05	VDD	J05	VSS
G06	VDD	H06	VDD	J06	VSS
G07	VSS	H07	VSS	J07	VSS
G08	VDD_PG	H08	VSS	J08	VSS
G09	VDD_PG	H09	VSS	J09	VSS
G10	VDD_PG	H10	VDD	J10	VDD
G11	VDD	H11	VDD	J11	VDD
G12	VDDPST18_LEFT	H12	VSS	J12	VSS

Ball	Name	Ball	Name	Ball	Name
G13	GPIO_4	H13	GPIO_7	J13	LD_ERR
G14	GPIO_2	H14	GPIO_3	J14	MODSIGN
G15	GPIO_5	H15	GPIO_6	J15	MODSTROB
K01	EGPIO_2	L01	EGPIO_0	M01	A_VSYNC
K02	EGPIO_12	L02	EGPIO_3	M02	EGPIO_4
K03	PMU_PWR_EN	L03	VQPSQ	M03	VQPSM
K04	VSS	L04	VSS	M04	A_AVDD
K05	VSS	L05	VSS	M05	VSS
K06	VDD_PG	L06	VDD_PG	M06	M_REXT
K07	VDD_PG	L07	VDD_PG	M07	M_AVDD
K08	VSS	L08	VSS	M08	M_AGND
K09	VDD_PG	L09	VDD_PG	M09	M_AGND
K10	VDD_PG	L10	VDD_PG	M10	ISP_SCL
K11	VSS	L11	VSS	M11	Z_AVDD
K12	VDDPST18_LEFT	L12	VSS	M12	VSS
K13	LD_ON_OUT_XX	L13	TDI	M13	SPI_CS
K14	TCLK	L14	TDO	M14	SPI_CLK
K15	TMS	L15	TRSTN	M15	SPI_WPN
N01	A_SDA	P01	A_RESETN	R01	A_AGND
N02	A_SCL	P02	A_RCLK	R02	A_DATAN0
N03	A_PDOWN	P03	A_DATAP0	R03	A_CLKN
N04	A_REXT	P04	A_CLKP	R04	A_DATAN1
N05	A_AGND	P05	A_DATAP1	R05	M_SCL
N06	M_VSYNC	P06	M_SDA	R06	M_RCLK
N07	M_RESETN	P07	M_PDOWN	R07	M_DATAN0
N08	VSS	P08	M_DATAP0	R08	M_CLKN
N09	ISP_SDA	P09	M_CLKP	R09	M_DATAN1
N10	Z_REXT	P10	M_DATAP1	R10	Z_DATAN1
N11	Z_PDOWN	P11	Z_DATAP1	R11	Z_CLKN
N12	Z_SCL	P12	Z_CLKP	R12	Z_DATAN0
N13	Z_SDA	P13	Z_DATAP0	R13	Z_RCLK
N14	SPI_MOSI	P14	Z_RESETN	R14	Z_VSYNC
N15	SPI_MISO	P15	CW_CSR_RSTN	R15	Z_AGND

3.3.4 Vision Processor D4 Power Requirements

The Vision Processor D4 requires the following power supplies for operation.

Table 3-6. Vision Processor D4 Power Requirements

Voltage Ball Name	Min. (V)	Nominal (V)	Max. (V)	Peak Current (Icc)
VDD	0.85	0.9	0.95	0.4A
VDD_PG	0.85	0.9	0.95	1.6A
USB_DVDD	0.81	0.9	0.99	0.2A
VPTX0	0.81	0.9	0.99	0.2A
VP	0.81	0.9	0.99	0.2A
*AVDD	1.71	1.8	1.89	0.2A
VDDPLL	0.85	0.9	0.95	0.2A
VDDTS	1.71	1.8	1.89	0.2A
VDDPST18 (Left and Right)	1.71	1.8	1.89	0.2A
USB_VDD330	3.13	3.3	3.46	0.2A

3.3.5 Vision Processor D4 Power Sequencing

The timing requirement for power sequencing is listed below and shown in the following figure.

- Hold Vision Processor D4 in reset
- Ramp up power in the 3.3V
- Ramp up power in the 0.9V
- Ramp up power in the 1.8V
- Release Vision Processor D4 Reset

Table 3-7. Vision Processor D4 Power Sequencing Timing Parameters

Parameter	Value	Units	Label
0.9V stable to 3.3V stable	>=50	us	T1
PMU_PWR_EN to 0.9V Stable	>=50	us	T2
1.8V stable to 0.9V Stable	>=50	us	T3
PRSTN (D4 RESET) assertion to 1.8V stable	15	us	T4

Figure 3-3. Vision Processor D4 Power Sequencing

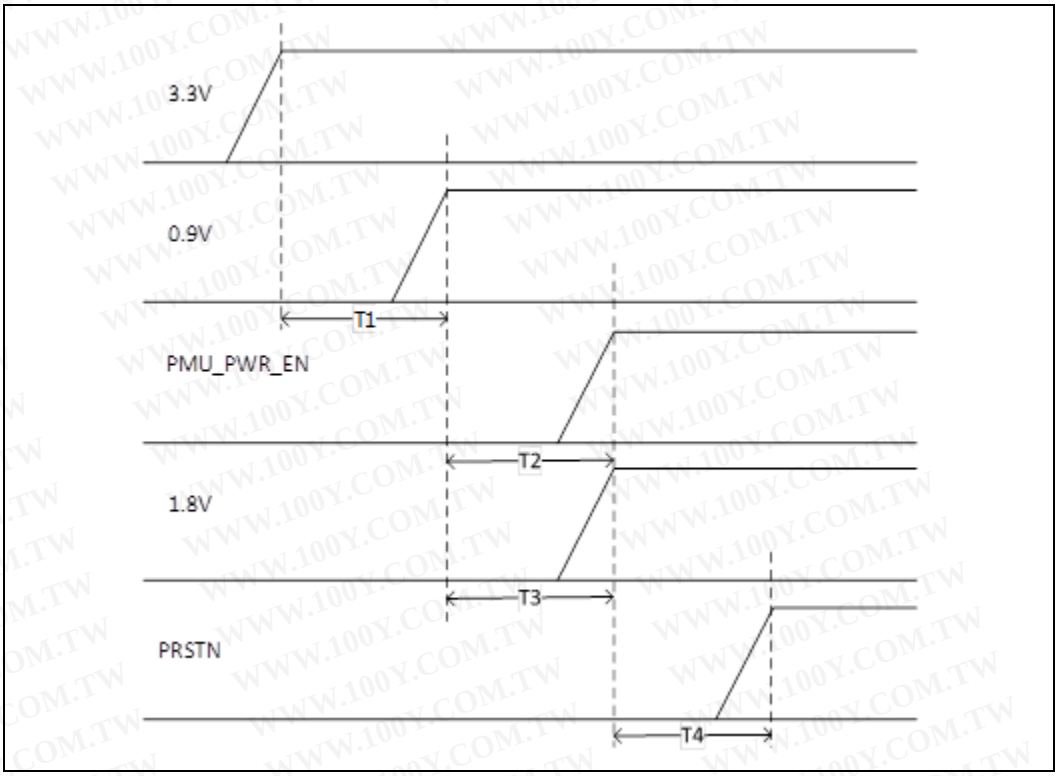

Note: Vision Processor D4 has no specific power down sequence requirement.

3.3.6 Vision Processor D4 Spec Code

The spec code is an identification mark printed on Vision Processor D4.

Table 3-8. Vision Processor D4 SPEC Code

Vision Processor D4	SPEC CODE
Production (Shipped in Tape and Reel)	SLLY5
Production (Shipped in Tray)	SLM6B

3.3.7 Vision Processor D4 Storage and Operating Conditions

Table 3-9. Vision Processor D4 Storage and Operating Conditions

Condition	Description	Min	Max	Unit
Storage (Still Air), Not Operating	Temperature (Sustained, Controlled)(1)	0	40	^{o}C

	Temperature (Short Exposure)(2)	-40	70	ºC
	Humidity	Temperature/ RH: 40ºC / 90%		
Component Case Temperature(3)	Temperature	0	110	ºC

NOTE:
(1) Controlled conditions should be used for long term storage of product.
(2) Short exposure represents temporary max limits acceptable for transportation conditions.
(3) Component case temperature limits must be met for all operating temperatures.

3.3.8 Vision Processor D4 Thermals

The thermal design should be such that Vision Processor D4 does not exceed component case temperature limit. Care must also be taken to make sure that the Vision Processor D4 heat is not transferred to other components of the imaging system or stereo depth module. It will be best to thermally isolate Vision Processor D4 from the stereo depth module.

3.4 Clock

Vision Processor D4 requires a single 24 MHz clock oscillator. All clocks required by stereo depth module are generated by Vision Processor D4.

3.5 Serial (SPI) Flash Memory

Vision Processor D4 requires 16Mbit Serial Flash Memory for its firmware storage. The recommended part number is IS25WP016 (www.issi.com) or equivalent

3.6 Stereo Depth Module

The stereo depth module components are described in Table 3-10. The stereo depth printed circuit board and components are encapsulated in a common metal stiffener.

Table 3-10. Stereo Depth Module

Component	Description
Left and Right Imagers	2 HD image sensors
Infrared (IR) Projector	Class 1 laser compliant (optional)
Color Sensor	1080p RGB image sensor (optional)
Depth Module Connector	50 pin connector plug
Privacy LED	Indicator when stereo module is streaming data (optional)
Stiffener	Reinforcement housing to keep imagers aligned
Label	Manufacture and product identifier information

Other Components	Laser Driver, EEPROM, Voltage Regulators, etc.

Figure 3-4. Stereo Depth Module (Intel® **RealSense™ Depth Module D410**)

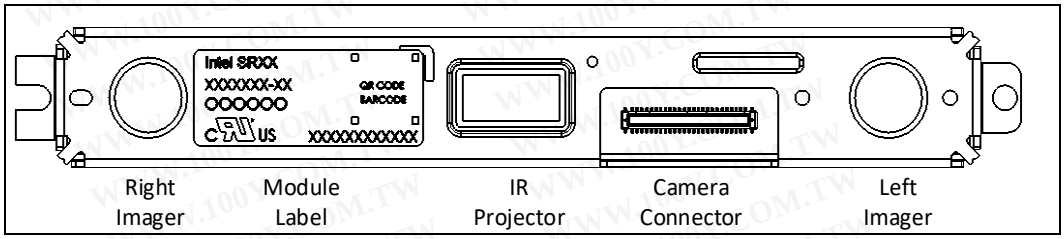

Figure 3-5. Stereo Depth Module (Intel® **RealSense™ Depth Module D430**)

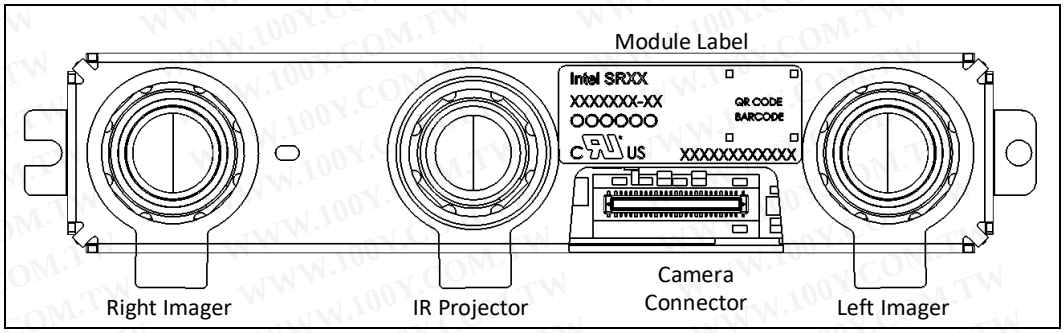

Table 3-11. Stereo Depth Module SKU Properties

Stereo Module	Intel® **RealSense™** Depth Module D400	Intel® **RealSense™** Depth Module D410	Intel® **RealSense™** Depth Module D415	Intel® **RealSense™** Depth Module D420	Intel® **RealSense™** Depth Module D430
Baseline	55mm	55mm	55mm	50mm	50mm
Left/Right Imagers Type	Standard	Standard	Standard	Wide	Wide
Left/Right Imagers FOV (degrees)	H:69.4±3 / V:42.5±2 / D:77±3	H:69.4±3 / V:42.5±2 / D:77±3	H:69.4±3 / V:42.5±2 / D:77±3	H:91.2±3 / V:65.5±3 / D:100.6±3	H:91.2±3 / V:65.5±3 / D:100.6±3
IR Projector	-	Standard	Standard	-	Wide
IR Projector FOV	-	H:80±3 / V:55±3 / D:89.3±3	H:80±3 / V:55±3 / D:89.3±3	-	H:100.4±3 / V:69±3 / D:110.4±3
Color Sensor	-	-	OV2740	-	-
Color Camera FOV	-	-	H:69.4±3/ V:42.5±2 / D:77±3	-	-
Module Dimensions (mm)	X=74.7mm Y=10mm Z=4.7mm	X=74.7mm Y=10mm Z=4.7mm	X=83.7mm Y=10mm Z=4.7mm	X=70.7mm Y=14mm Z=10.53mm	X=70.7mm Y=14mm Z=10.53mm

H – Horizontal FOV, V – Vertical FOV, D – Diagonal FOV, X – Length, Y – Breadth, Z – Thickness

3.6.1 Left and Right Imagers

The stereo depth module has two camera sensors referred here as imagers, they are identical parts and are configured with identical settings. The imagers are labeled "left" and "right" from the perspective of the camera module looking outward. The stereo imager pairs are referred as Standard or Wide based on imager field of view.

Table 3-12. Standard Left and Right Imager Properties

Parameter	Camera Sensor Properties
Image Sensor	OmniVision OV2740
Active Pixels	1920 × 1080
Sensor Aspect Ratio	16:9
Format	10-bit RAW
F Number	f/2.0
Focal Length	1.88mm
Filter Type	IR Cut – D400, None – D410, D415, Camera D415
Focus	Fixed
Shutter Type	Rolling Shutter
Signal Interface	MIPI CSI-2, 2X Lanes
Horizontal Field of View	69.4°
Vertical Field of View	42.5°
Diagonal Field of View	77°
Distortion	<=1.5%

Table 3-13. Wide Left and Right Imager Properties

Parameter	Camera Sensor Properties
Image Sensor	OmniVision OV9282
Active Pixels	1280 X 800
Sensor Aspect Ratio	8:5
Format	10-bit RAW
F Number	f/2.0
Focal Length	1.93mm
Filter Type	IR Cut – D420, None – D430, D435
Focus	Fixed
Shutter Type	Global Shutter

Parameter	Camera Sensor Properties
Signal Interface	MIPI CSI-2, 2X Lanes
Horizontal Field of View	91.2º
Vertical Field of View	65.5º
Diagonal Field of View	100.6º
Distortion	<=1.5%

3.6.2 Infrared Projector

The infrared projector improves the ability of the stereo camera system to determine depth by projecting a static infrared pattern on the scene to increase texture on low texture scenes. The infrared projector meets class 1 laser safety under normal operation. The power delivery and laser safety circuits are on the stereo depth module. The infrared projector is referred as Standard or Wide based on field of projection.

Table 3-14. Standard Infrared Projector Parameters

Parameter	Properties
Projector	Infrared
Pattern Type	Static
Illuminating Component	Vertical-cavity surface-emitting laser (VCSEL) + Optics
Laser Controller	PWM
Optical Power	360mW average, 440mW peak
Laser Wavelength	850nm ± 10 nm nominal @ 20°C
Laser Compliance	Class 1, IEC 60825-1:2007 Edition 2, IEC 60825-1:2014 Edition 3
Horizontal Field of Projection	80º
Vertical Field of Projection	55º
Diagonal Field of Projection	89.3º

Table 3-15. Wide Infrared Projector Parameters

Parameter	Properties
Projector	Infrared
Pattern Type	Static
Illuminating Component	Vertical-cavity surface-emitting laser (VCSEL) + optics
Laser Controller	PWM
Optical Power	360mW average, 4.25W peak
Laser Wavelength	850nm ± 10 nm nominal @ 20°C

Parameter	Properties
Laser Compliance	Class 1, IEC 60825-1:2007 Edition 2, IEC 60825-1:2014 Edition 3
Horizontal Field of Projection	100.4º
Vertical Field of Projection	69º
Diagonal Field of Projection	110.4º

3.6.3 Color Sensor

The color sensor on the stereo depth module in addition to color image provides texture information. Usages for the texture information include overlay on a depth image to create a color point cloud and overlay on a 3d model for reconstruction.

Table 3-16. Color Sensor Properties

Parameter	Camera Sensor Properties
Image Sensor	OmniVision OV2740
Color Image Signal Processor	Discrete
Active Pixels	1920 X 1080
Sensor Aspect Ratio	16:9
Format	10-bit RAW RGB
F Number	f/2.0
Focal Length	1.88mm
Filter Type	IR Cut Filter
Focus	Fixed
Shutter Type	Rolling Shutter
Signal Interface	MIPI CSI-2, 1 Lane
Horizontal Field of View	69.4º
Vertical Field of View	42.5º
Diagonal Field of View	77º
Distortion	<=1.5%

3.6.4 Depth Module Connector

The depth module connector provides signal and power interface to the stereo depth module. The connector on stereo depth module is a 50-pin connector plug.

Table 3-17. Depth Module 50-pin Connector Plug Details

Parmeter	Description	Diagram
Number of Contacts	50	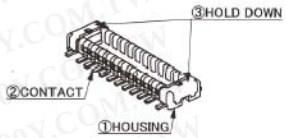
Product Name	NOVASTACK 35-P Plug Assembly	
Part Number	20708-050E	
Manufacturer Website	www.i-pex.com	

3.6.5 Stereo Depth Module Label

Table 3-18. Stereo Depth Module Product Labeling

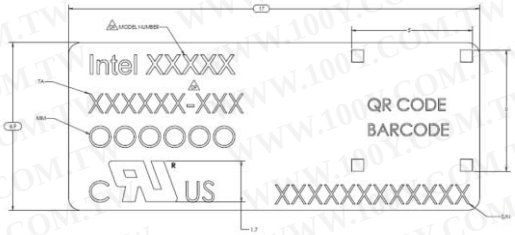

For illustration purpose only, subject to change

	Dimension	Value	Unit
A	Label Width	17	mm
B	Label Height	6.9	mm
C	Scan Code Width	5	mm
D	Scan Code Height	5	mm

Scan Code Format
XXXXXXXXXXXXOOOOOOXXXXXX-XXX

Table 3-19. Stereo Depth Module Label Fields

Group	Field	Description	Type
Company	Intel	Manufacturer	Static
Model Number	RealSense™ Camera 4XX	Camera Model Number	Static
Product Assembly Number	XXXXXX	Product Identifier Code	Static
	-XXX	Manufacture Configuration Code	Dynamic
	OOOOOO	Product Material Code	Static
Serial Number	XXXXXXXXXXXX	Manufacture Unit Code	Dynamic

Table 3-20. Intel® **RealSense™ Depth Module D400** Series Product Identifier Code and Product Material Code

Production	Product Identifier Code-Manufacture Configuration Code	Product Material Code
Depth Module D400	J32082-100	951934
Depth Module D410	J32106-100	951913
Depth Module D415	J32114-100	952000
Depth Module D420	J51355-100	956826
Depth Module D430	J42086-100	954010

3.6.6 Stiffener

The stiffener maintains the precise alignment of the camera sensors and assists in subassembly rigidity. The stiffener consists of a bottom and a top plate. The stiffener is of stainless steel grade AISI 304.

3.6.7 Temperature Sensor

The stereo depth module is equipped with a thermal sensor that is used for laser safety control (IR Projector). The RealSense library provides access to the thermal sensor but it is not intended to be used by applications outside of development environments.

3.6.8 Other Stereo Depth Module Components

Table 3-21. Other Stereo Depth Module Components

Component	Description
Laser (IR Projector) Driver	The depth module implements a laser driver which controls the infrared laser within the infrared projector system.
Laser (IR projector) Thermal Control	The depth module implements a laser safety control circuit that adjusts laser drive output. When laser power and depth streaming is enabled and if stereo depth module temperature is >60°, laser power is halved. If temperature is not lowered below temperature limit within a certain interval, the laser is shut off.
EEPROM	The depth module implements flash memory for storing the calibration data.
Fork/Screw Mount	Secure placement and mounting to system/chassis/heat sink
Voltage Regulators	The stereo depth module implements DC to DC voltage converters

3.6.9 Mechanical Dimensions

Table 3-22. Intel® **RealSense™ Depth Module D400** Mechanical Dimensions

Dimension	Min	Nominal	Max	Unit
Width	74.5	74.7	74.9	mm
Height	9.8	10	10.2	mm
Depth	4.5	4.7	4.9	mm
Flatness Tolerance	-	0.2	-	mm
Weight	6.5	7.2	8	gr

Table 3-23. Intel® **RealSense™ Depth Module D410** Mechanical Dimensions

Dimension	Min	Nominal	Max	Unit
Width	74.5	74.7	74.9	mm
Height	9.8	10	10.2	mm
Depth	4.5	4.7	4.9	mm
Flatness Tolerance	-	0.2	-	mm
Weight	7.3	8.1	8.9	gr

Table 3-24. Intel® **RealSense™ Depth Module D415** Mechanical Dimensions

Dimension	Min	Nominal	Max	Unit
Width	89.5	89.7	89.9	mm
Height	9.8	10	10.2	mm
Depth	4.5	4.7	4.9	mm
Flatness Tolerance		TBD		mm
Weight		TBD		gr

Table 3-25. Intel® **RealSense™ Depth Module D420** Mechanical Dimensions

Dimension	Min	Nominal	Max	Unit
Width	70.5	70.7	70.9	mm
Height	13.8	14	14.2	mm
Depth	10.33	10.53	10.73	mm
Flatness Tolerance	-	0.2	-	mm
Weight		TBD		gr

Table 3-26. Intel® **RealSense™ Depth Module D43**0 Mechanical Dimensions

Dimension	Min	Nominal	Max	Unit
Width	70.5	70.7	70.9	mm
Height	13.8	14	14.2	mm
Depth	10.33	10.53	10.73	mm
Flatness Tolerance	-	0.2	-	mm
Weight	13	14.5	16	gr

3.6.10 Stereo Depth Module Power Sequence

Figure 3-6. Stereo Depth Module Power Sequence

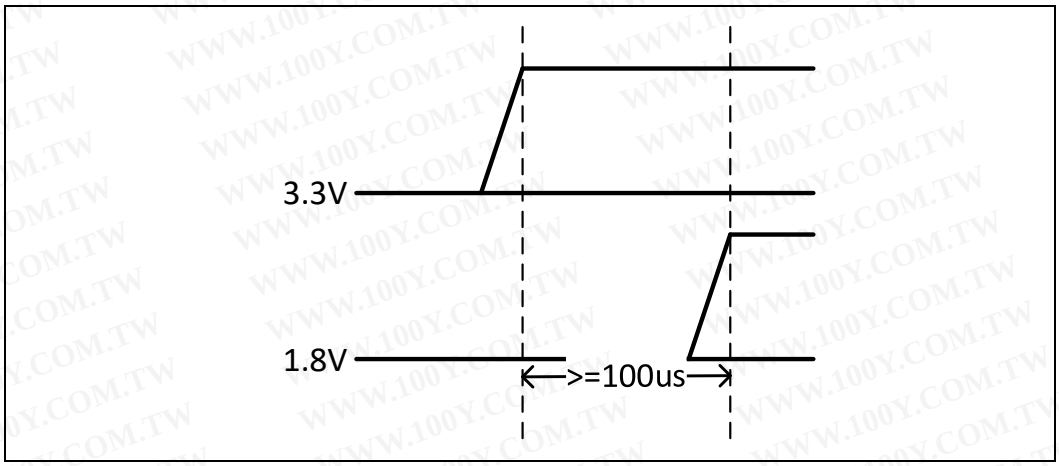

3.6.11 Stereo Depth Module Storage and Operating Conditions

Table 3-27. Stereo Depth Module Storage and Operating Conditions

Condition	Description	Min	Max	Unit
Storage (Ambient), Not Operating	Temperature (Sustained, Controlled)(1)	0	40	ºC
	Temperature (Short Exposure)(2)	-40	70	ºC
	Humidity	Temperature/ RH: 40ºC / 90%		
Case Temperature (3)(4)(5)	Temperature	0	50	ºC

NOTE:
(1) Controlled conditions should be used for long term storage of product.
(2) Short exposure represents temporary max limits acceptable for transportation conditions.
(3) Case temperature limits must be met for all operating temperatures.
(4) Case temperature is specified for the overall depth module
(5) Case temperature 0° minimum and lower temperatures is non-condensing

3.7 Intel® RealSense™ Vision Processor D4 Board

The Vision Processor D4 Board enables an easy and quick option for system integrators to integrate Vision Processor D4 into a system.

Table 3-28. Vision Processor D4 Board

Type	Description
USB Peripheral Type-C	Connects to Host USB 3.1 Gen 1 port through USB Type-C connector and cable

Table 3-29. Vision Processor D4 Board Components

Components	Description
Vision Processor D4	Stereo Depth Processing ASIC
16Mb Serial Flash	Vision Processor D4 firmware storage
24MHz Crystal	Clock source for Vision Processor D4
Realtek* ISP with external serial flash	Color image signal processor
Depth Module Receptacle	50 pin receptacle for connection to Stereo Depth Module
USB Type-C	USB peripheral connector for connection to Host USB 2.0/USB 3.1 Gen 1 port
External Sensor Sync Connector	Interface to external sensor interrupts/sync signals
Voltage Regulators	DC to DC converters powering Vision Processor D4 Board and stereo depth module.
Mounting holes	Vision Processor D4 Board secure mounting

Figure 3-7. Vision Processor D4 Board (USB Peripheral Type-C)

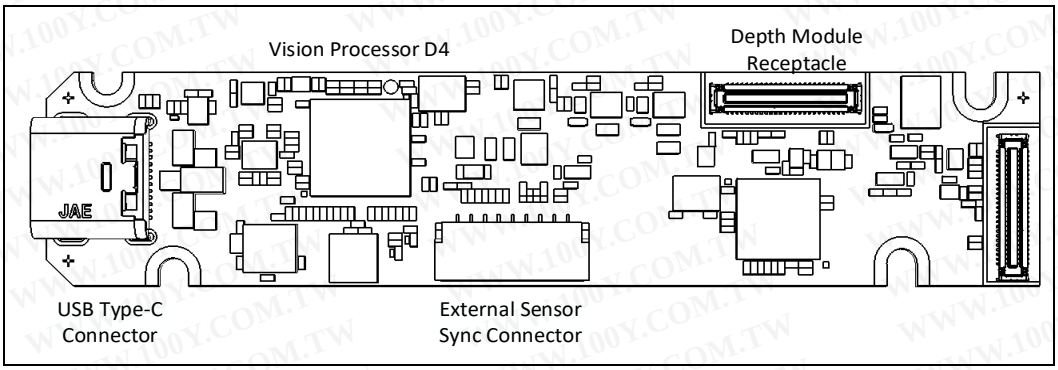

3.7.1 Mechanical Dimensions

Table 3-30. Vision Processor D4 USB Type-C Board Mechanical Dimensions

Dimension	Min	Nominal	Max	Unit
Width	72.2	72.4	72.6	mm
Height	15.8	16	16.2	mm
Depth	3.74	3.94	4.14	mm
Weight	3.56	3.96	4.36	gr

3.7.2 Depth Module Receptacle

The Vision Processor D4 Board interface to stereo depth module is through 50 pin receptacle on the board.

Table 3-31. Depth Module Receptacle Details

Parameter	Description	Diagram
Number of Contacts	50	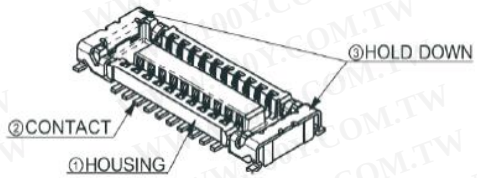
Product Name	NOVASTACK* 35-P Receptacle Assembly	
Part Number	20709-050E	
Manufacturer Website	www.i-pex.com	

3.7.3 Flex and Rigid Interposer Interconnect

The high speed interposer at one end has the 50 pin depth module receptacle to connect into 50 pin depth module plug on stereo depth module and at the other end has the 50 pin depth module plug to connect into 50 pin depth module receptacle on Vision Processor D4 Board. The high speed flex Interposer is custom developed and procured by system integrator.

Figure 3-8. Flex Interposer (Illustration)

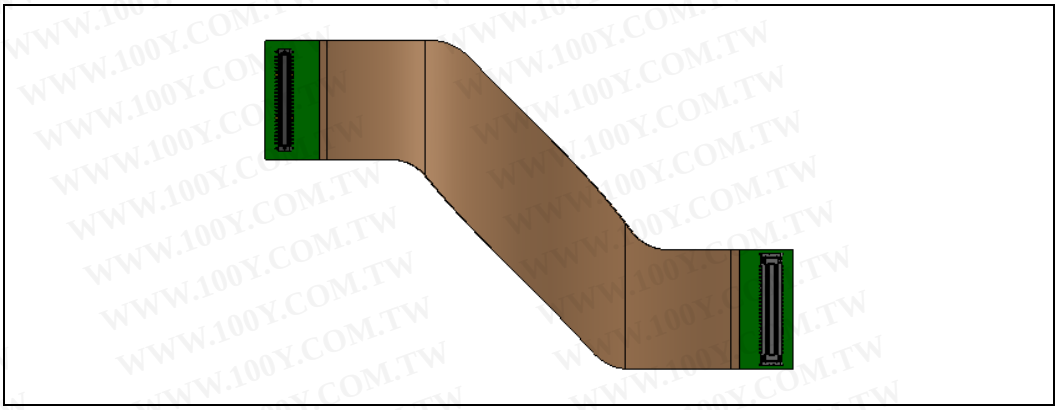

Figure 3-9. Rigid Interposer (Illustration)

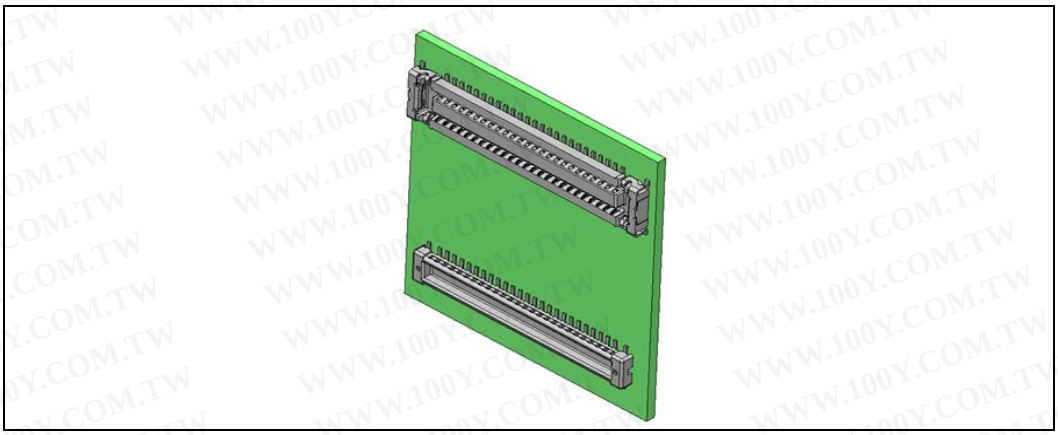

Figure 3-10. Depth Module Receptacle and Plug Connector Pin Position

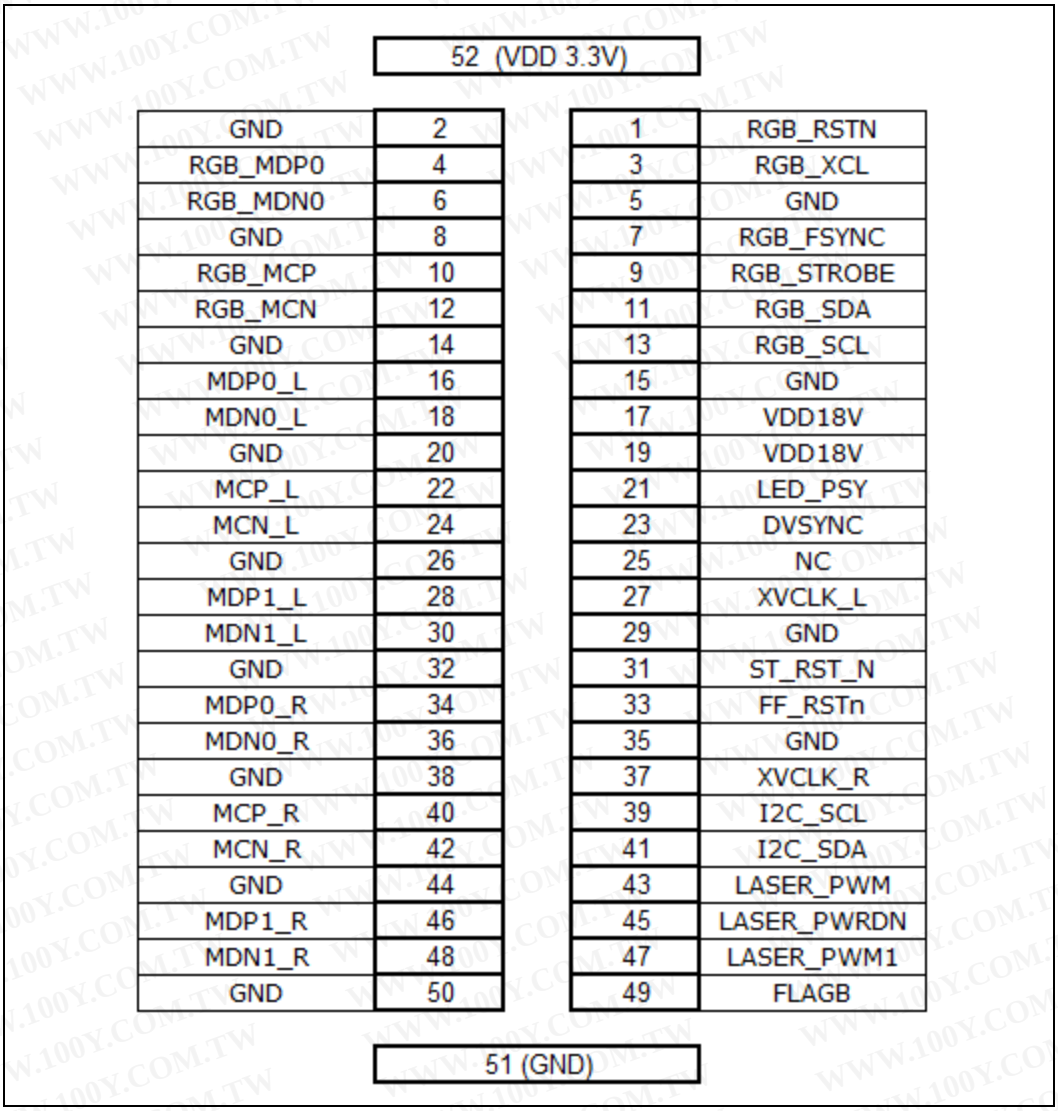

Table 3-32. Interposer Interconnect Signal Description

Position	ASIC Board / Motherboard	Depth Module	Interconnect Description
1	RGB_RSTN_N	RGB_RSTN_N	RGB Sensor Reset
2	GND	GND	Ground
3	RGB_XCL	RGB_XCL	RGB Sensor Clock
4	RGB_MDP0	RGB_MDP0	RGB Sensor MIPI Data Lane 0 differential pair positive
5	GND	GND	Ground
6	RGB_MDN0	RGB_MDN0	RGB Sensor MIPI Data Lane 0 differential pair negative

Position	ASIC Board / Motherboard	Depth Module	Interconnect Description
7	RGB_FSYNC	RGB_FSYNC	RGB Sensor Sync
8	GND	GND	Ground
9	RGB_STROBE	RGB_STROBE	RGB Sensor Strobe
10	RGB_MCP	RGB_MCP	RGB Sensor MIPI Clock differential pair positive
11	RGB_SDA	RGB_SDA	RGB Sensor I2C Bus Data
12	RGB_MCN	RGB_MCN	RGB Sensor MIPI Clock differential pair negative
13	RGB_SCL	RGB_SCL	RGB Sensor I2C Bus Clock
14	GND	GND	Ground
15	GND	GND	Ground
16	MDP0_L	MDP0_L	Left Imager MIPI Data Lane 0 differential pair positive
17	VDD18V	VDD18V	1.8V Power
18	MDN0_L	MDN0_L	Left Imager MIPI Data Lane 0 differential pair negative
19	VDD18V	VDD18V	1.8V Power
20	GND	GND	Ground
21	LED_PSY	LED_PSY	Privacy LED control signal
22	MCP_L	MCP_L	Left Imager MIPI Clock differential pair positive
23	DVSYNC	DVSYNC	VSYNC
24	MCN_L	MCN_L	Left Imager MIPI Clock differential pair negative
25	NC	NC	No Connect
26	GND	GND	Ground
27	XVCLK_L	XVCLK_L	Clock to Left Imager
28	MDP1_L	MDP1_L	Left Imager MIPI Data Lane 1 differential pair positive
29	GND	GND	Ground
30	MDN1_L	MDN1_L	Left Imager MIPI Data Lane 1 differential pair negative
31	ST_RST_N	ST_RST_N	Reset signal to Left and Right Imager
32	GND	GND	Ground
33	FF_RSTn	FF_RSTn	Laser Error
34	MDP0_R	MDP0_R	Right Imager MIPI Data Lane 0 differential pair positive
35	GND	GND	Ground
36	MDN0_R	MDN0_R	Right Imager MIPI Data Lane 0 differential pair negative
37	XVCLK_R	XVCLK_R	Clock to Right Imager
38	GND	GND	Ground

Position	ASIC Board / Motherboard	Depth Module	Interconnect Description
39	I2C_SCL	I2C_SCL	I2C Bus Clock
40	MCP_R	MCP_R	Right Imager MIPI Clock differential pair positive
41	I2C_SDA	I2C_SDA	I2C Bus Data
42	MCN_R	MCN_R	Right Imager MIPI Clock differential pair negative
43	LASER_PWM	LASER_PWM	IR Projector Control Signal
44	GND	GND	Ground
45	LASER_PWRDN	LASER_PWRDN	IR Projector Power Down
46	MDP1_R	MDP1_R	Right Imager MIPI Data Lane 1 differential pair positive
47	LASER_PWM1	LASER_PWM1	IR Projector Control Signal
48	MDN1_R	MDN1_R	Right Imager MIPI Data Lane 1 differential pair negative
49	FLAGB	FLAGB	IR Projector Fault Detect
50	GND	GND	Ground
51	GND	GND	Ground
52	VDD33V	VDD33V	3.3V power

Figure 3-11. Depth Module Connector Orientation and Pin Position

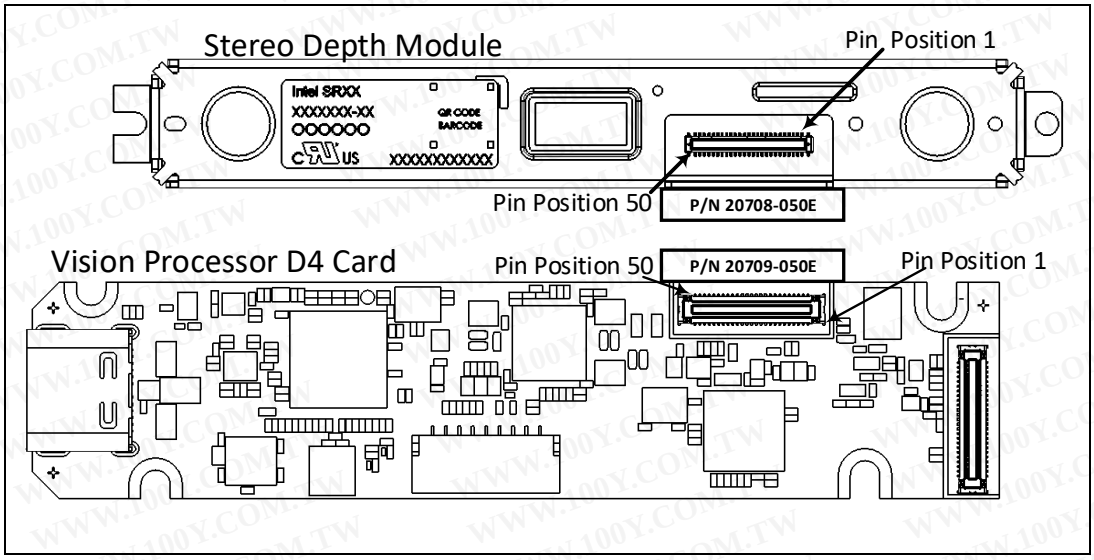

3.7.4 External Sensor Sync Connector

The external sensor connector provides the interface for external sensors to synchronize to depth output.

Table 3-33. External Sensor Connector Details

Parameter	Description	Diagram
Number of Contacts	9	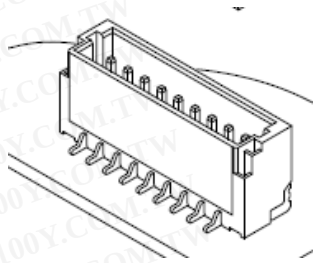
Product Name	9 Positions Header, Shrouded Connector	
Part Number	SM09B-SRSS-TB(LF)(SN)	
Manufacturer Website	www.jst-mfg.com	

Table 3-34. External Sensor Sync Connector Pin List

Pin	Signal	Function	Description
1	GPIO3	GPIO	Not Defined
2	LASER_PWRDWN	External IR Projector Control	IR Projector Power Down signal
3	FLAGB	External IR Projector Control	External IR Projector Fault Detect
4	LASER_PWM	External IR Projector Control	External IR Projector
5	SYNC	VSYNC	Depth VSYNC
6	SDA	I2C Bus	I2C Data (Slave)
7	SCL	I2C Bus	I2C Clock (Slave)
8	VDD33V	Power	3.3V
9	GND	Ground	Ground

3.7.5 USB Peripheral Connector – Type-C

USB Type-C connector consists of 24 signal pins designed in a symmetrical way. The connector z height is as low as 3mm and enables enhanced user experience by allowing the USB Type-C plug to be plugged into a receptacle either right side up or upside down. Interoperability between USB Type-C and legacy USB is possible through standard legacy cable assemblies defined in USB Type-C Cable and Connector specification.

Figure 3-12. USB Type-C Receptacle Pin Map

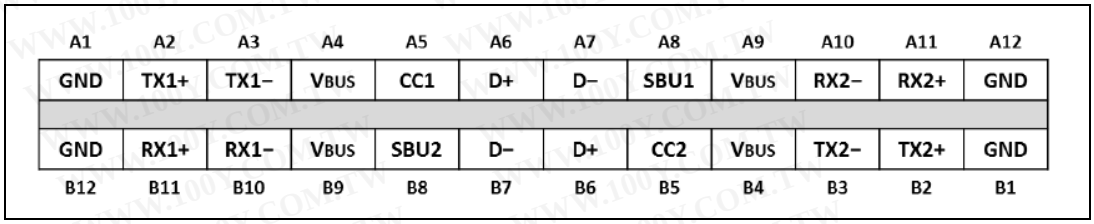

Table 3-35. USB Peripheral Connector Pin List

Pin	Signal	Function	Description
A1	GND	Power Delivery	Ground
A2	TX1+	USB 3.1 Gen 1 Data	First SuperSpeed TX Differential Pair Positive
A3	TX1-	USB 3.1 Gen 1 Data	First SuperSpeed TX Differential Pair Negative
A4	VBUS	Power Delivery	5V
A5	CC1	Control	Configuration Channel 1
A6	D+	USB2.0 Data	USB 2.0 differential pair positive
A7	D-	USB2.0 Data	USB 2.0 differential pair negative
A8	SBU1	Sideband	Sideband Use Signal 1
A9	VBUS	Power Delivery	5V
A10	RX2-	USB 3.1 Gen 1 Data	Second SuperSpeed RX Differential Pair Negative
A11	RX2+	USB 3.1 Gen 1 Data	Second SuperSpeed RX Differential Pair Positive
A12	GND	Power Delivery	Ground
B1	GND	Power Delivery	Ground
B2	TX2+	USB 3.1 Gen 1 Data	Second SuperSpeed TX Differential Pair Positive
B3	TX2-	USB 3.1 Gen 1 Data	Second SuperSpeed TX Differential Pair Negative
B4	VBUS	Power Delivery	5V
B5	CC2	Control	Configuration Channel 2
B6	D+	USB 2.0 Data	USB 2.0 differential pair positive
B7	D-	USB 2.0 Data	USB 2.0 differential pair negative
B8	SBU2	Sideband	Sideband Use Signal 2
B9	VBUS	Power Delivery	5V
B10	RX1-	USB 3.1 Gen 1.0 Data	First SuperSpeed RX Differential Pair Negative
B11	RX1+	USB 3.1 Gen 1.0 Data	First SuperSpeed RX Differential Pair Positive
B12	GND	Power Delivery	Ground

3.7.6 Color Image Signal Processor (ISP)

The color sensor data is sent to discrete Image Signal Processor (ISP) on the Vision processor D4 Board for image adjustments, image scaling and processing functions to

help compensate for inherent inaccuracy in lens and sensor in providing a better image quality. The processed color image is sent to the Vision Processor D4.

Table 3-36. ISP Properties

Parameter	ISP Properties
ISP Part Number on Vision Processor D4 Board	RTS5845
1M-bit Serial Flash for ISP	Winbond* W25X10CL or equivalent
Interface To Vision Processor D4	MIPI CSI-2, 2X Lanes
Interface To RGB Sensor	MIPI CSI-2, 1X Lane

3.7.7 Vision Processor D4 Board Power Requirements

The Vision Processor D4 Board is powered through VBUS power of the USB connector. The Vision Processor D4 Board in turn power sources the stereo depth module.

Table 3-37. Vision Processor D4 Board Power Requirements

Parameter		Min	Nom	Max	Unit
VCC	Supply Voltage	4.75	5V	5.25V	V
ICC	Supply Current			700	mA
	Supply Voltage Ramp Rate	0.5		5	ms

3.7.8 Vision Processor D4 Board Thermals

The Vision Processor D4 Board should be screw mounted on to a heat sink or a heat dissipating structure element using screw forks on Board. Thermal conductive tape (electrically non-conductive) should cover the entire back side area (non-component side) of the ASIC Board for thermal transfer onto heat sink or heat dissipating structure element.

3.7.9 Vision Processor D4 Board Storage and Operating Conditions

Table 3-38. Vision Processor D4 Board Storage and Operating Conditions

Condition	Description	Min	Max	Unit
Storage (Still Air), Not Operating	Temperature (Sustained, Controlled)(1)	0	40	ºC
	Temperature (Short Exposure)(2)	-40	70	ºC
	Humidity	Temperature/ RH: 40ºC / 90%		
Case Temperature (3)(4)(5)	Temperature	0	50	ºC

NOTE:
(1) Controlled conditions should be used for long term storage of product.
(2) Short exposure represents temporary max limits acceptable for transportation conditions.
(3) Case temperature limits must be met for all operating temperatures.
(4) Case temperature is specified for the overall Vision Processor D4 Board
(5) Case temperature 0° minimum and lower temperatures is non-condensing

3.7.10 Intel® **RealSense™ Vision Processor D4 Board** Product Identifier and Material Code

Table 3-39. Vision Processor D4 Board Product Identifier and Material Code

Production	Product Identifier Code-Manufacture Configuration Code	Product Material Code
Vision Processor D4 Board	J32139-120	952019

3.8 Intel® **RealSense™ Depth Camera D40**0 Series

Figure 3-13. Intel® RealSense™ Depth Camera D415

Figure 3-14. Intel® **RealSense™ Depth Camera** D435

Table 3-40. Depth Camera SKU properties

D400 series Depth Cameras	Intel® **RealSense™ Depth** Camera D415	Intel® **RealSense™ Depth** Camera D435
Depth module	Intel® RealSense™ Depth module D415	Intel® RealSense™ Depth module D430
Baseline	55mm	50mm
Left/Right Imagers Type	Standard	Wide

D400 series Depth Cameras	Intel® **RealSense™ Depth** Camera D415	Intel® **RealSense™ Depth** Camera D435
Left/Right Imagers FOV (degrees)	H:69.4±3 / V:42.5±2 / D:77±3	H:91.2±3 / V:65.5±3 / D:100.6±3
IR Projector	Standard	Wide
IR Projector FOV	H:80±3 / V:55±3 / D:89.3±3	H:100.4±3 / V:69±3 / D:110.4±3
Color Sensor	OV2740	OV2740
Color Camera FOV	H:69.4±3 / V:42.5±2 / D:77±3	H:69.4±3 / V:42.5±2 / D:77±3
Depth Module Dimensions (mm)	X=83.7mm Y=10mm Z=4.7mm	X=70.7mm Y=14mm Z=10.53mm

NOTE: H – Horizontal FOV, V – Vertical FOV, D – Diagonal FOV, X – Length, Y – Breadth, Z – Thickness

3.8.1 Depth Camera D400 Series Mechanical Dimensions

Table 3-41. Intel® **RealSense™ Depth Camera D415 Mechanical Dimensions**

Dimension	Min	Nominal	Max	Unit
Width	-	99	-	mm
Height	-	23	-	mm
Depth	-	20	-	mm
Weight	-	72	-	gr

Table 3-42. Intel® **RealSense™ Depth Camera D435 Mechanical Dimensions**

Dimension	Min	Nominal	Max	Unit
Width	-	90	-	mm
Height	-	25	-	mm
Depth	-	25	-	mm
Weight	-	72	-	gr

3.8.2 Depth Camera D400 Series Thermals

Table 3-43. Max Skin Temperature

D400-Series Depth Cameras	Max Skin Temperature (25 degree C Ambient in Open Environment)
D415	44 ºC
D435	44 ºC

3.8.3 Depth Camera D400 Series Storage and Operating Conditions

Table 3-44. Depth Camera D400 Series Storage and Operating Conditions

Condition	Description	Min	Max	Unit
Storage (Still Air), Not Operating	Temperature (Sustained, Controlled)(1)	0	40	ºC
	Temperature (Short Exposure)(2)	-40	70	ºC
	Humidity	Temperature/ RH: 40ºC / 90%		
Operating (Still Air)	Temperature	0	35	ºC

NOTE:

(1) Controlled conditions should be used for long term storage of product.

(2) Short exposure represents temporary max limits acceptable for transportation conditions.

3.8.4 Depth Camera D400 Series Product Identifier and Material Code

Table 3-45. Depth Camera D400 Series Product Identifier and Material Code

Production	Product Identifier Code-Manufacture Configuration Code	Product Material Code
Depth Camera D415	J72476-100	961443
Depth Camera D415 (Multi Pack)	J72476-100	962304
Depth Camera D435	J72479-100	961448
Depth Camera D435 (Multi Pack)	J72479-100	962305

3.8.5 Camera Lens Cleaning Procedure

1. Do not use any chemical or water on the camera lens

2. Remove dust and dirt as much as possible from the lens with a lens blower brush.
3. Wipe with soft cloth or eyeglass lens wiper.

§§

4 Functional Specification

4.1 Vendor Identification (VID) and Device Identification (DID)

Table 4-1. Vendor ID and Device ID Table

Depth Module/Depth Camera	Vendor ID	Device ID
Intel® RealSense™ Depth Module D400	8086	0x0AD1
Intel® RealSense™ Depth Module D410	8086	0x0AD2
Intel® RealSense™ Depth Module D415	8086	0x0AD3
Intel® RealSense™ Depth Camera D415	8086	0x0AD3
Intel® RealSense™ Depth Module D420	8086	0x0AF6
Intel® RealSense™ Depth Module D430	8086	0x0AD4
Intel® RealSense™ Depth Camera D435	8086	0x0B07

4.2 Vision Processor D4 Data Streams

Intel® RealSense™ Vision Processor D4 Depth imaging system provides high quality depth data to a host system. The depth data is generated with stereo vision technology that is optionally assisted by an infrared projector. The imaging system has the ability to syncronize with color stream.

Table 4-2. Image Formats (USB 3.1 Gen1)

Format	Resolution	Frame Rate (FPS)	Comment
Z [16 bits]	1280x720	6,15,30	Depth
	848X480	6,15,30,60,90	
	640x480	6,15,30,60,90	
	640x360	6,15,30,60,90	
	480x270	6,15,30,60,90	
	424x240	6,15,30,60,90	
Y8 [8 bits]	1280x720	6,15,30	Luminance Left and Right Imager
	848X480	6,15,30,60,90	
	640x480	6,15,30,60,90	
	640x360	6,15,30,60,90	

Format	Resolution	Frame Rate (FPS)	Comment
	480x270	6,15,30,60,90	
	424x240	6,15,30,60,90	
UYVY [16 bits]	1280x720	6,15,30	Color Stream from Left Imager (D400, D410 & D415)
	848X480	6,15,30,60,90	
	640x480	6,15,30,60,90	
	640x360	6,15,30,60,90	
	480x270	6,15,30,60,90	
	424x240	6,15,30,60,90	
YUY2 [16 bits]	1920x1080	6,15,30	Color Stream from RGB camera (Camera D415 & D435)
	1280x720	6,15,30,60	
	960x540	6,15,30,60	
	848x480	6,15,30,60	
	640x480	6,15,30,60	
	640x360	6,15,30,60	
	424x240	6,15,30,60	
	320x240	6,30,60	
	320x180	6,30,60	
Calibration [24 bits]	1920x1080	15,25	D400/D410/D415
	1280x800	15,25	D420/D430/D435

NOTE:

Depth and Color are mapped as separated interfaces. Each one of the interfaces is working independent with the other interface (Virtual channel in MIPI and End Point in USB).

Table 4-3. Image Formats (USB 2.0)

Format	Resolution	Frame Rate	Comment
Z [16 bits]	1280x720	6	Depth
	640x480	6,15,30	
	480x270	6,15,30,60	
Y8 [8 bits]	1280x720	6	Luminance Left and Right Imager
	640x480	6,15,30	
	480x270	6,15,30,60	
UYVY [16 bits]	1280x720	6	Color Stream from Left Imager (D410 & D415)
	640x480	6,15,30	
	480x270	6,15,30,60	
YUY2 [16 bits]	1280x720	6	

Format	Resolution	Frame Rate	Comment
	640x480	6,15,30	Color Stream from RGB camera (Camera D415 & D435)
	424x240	6,15,30,60	

NOTE:

Depth and Color are mapped as separated interfaces. Each one of the interfaces is working independent with the other interface (Virtual channel in MIPI and End Point in USB).

Table 4-4. Simultaneous Image Streams (USB 3.1 Gen1 & USB2.0)

Depth	Imager	Color (Left Imager) D400/D410	Color (RGB Camera) D415/D435	Comment
Z16	Y8			
Z16		UYVY		
Z16	Y8		YUV2	
Z16			YUV2	

NOTE:

1. RGB to depth hardware sync is only supported with the same frame rate for all streams.
2. For Depth and RGB camera simultaneous streaming, it is recommended to have color resolution to be the same or higher than depth resolution.
3. USB 3.1 Gen1 supports all resolution/frame rate combinations in a typical dedicated USB port configuration. On a USB hub with other devices (e.g. other RealSense cameras), considerations regarding bandwidth requirements have to be taken.
4. USB 2.0 supports a subset of the resolution/frame rate combinations given the bandwidth requirements.
   - Max. Depth Resolution Simultaneous Stream Configuration with Depth at 640X480, 15 FPS, Imager at 640X480, 15 FPS and RGB Camera at 640X480, 30 FPS.
   - Max. Depth Frame Rate Simultaneous Stream Configuration with Depth at 480X270, 60 FPS, Imager at 480X270, 60 FPS and RGB Camera at 424x240, 30 FPS

4.3 Depth Field of View (FOV)

The depth field of view is the common overlap of the individual left and right Imager field of view for which Vision Processor D4 provides depth data

Table 4-5. Depth Field of View

Format	D400/D410/D415	D420/D430/D435
Horizontal FOV (VGA 4:3)	48	74
Vertical FOV (VGA 4:3)	40	62
Diagonal FOV (4:3)	60	88

Horizontal FOV (HD 16:9)	64	86
Vertical FOV (HD 16:9)	41	57
Diagonal FOV (HD 16:9)	72	94

NOTE:

- Due to mechanical tolerances of +/-5%, Max and Min FOV values can vary from lens to lens and module to module by ~ +/- 3 degrees.

4.4 Minimum-Z Depth

The Minimum-Z Depth is the minimum distance from depth camera to scene for which Vision Processor D4 provides depth data.

Table 4-6. Minimum-Z Depth

Resolution	D400/D410/D415	D420/D430
	Min-Z (mm)	Min-Z (mm)
1280x720	450	280
848X480	310	195
640x480	310	175
640x360	240	150
480x270	180	120
424x240	160	105

4.5 Depth Quality Specification

Table 4-7. Depth Quality Specification

Metric	D400/D410/D415 (up to 2 Meters and 80% FOV)	D420/D430/D435 (up to 2 Meters and 80% FOV)
Z-accuracy (or absolute error)	≤ 2%	≤ 2%
Fill rate	≥ 99%	≥ 99%
RMS Error (or Spatial Noise)	≤ 2%	≤ 2%
Temporal Noise (Pixel)	≤ 0.5%	≤0.5%

NOTES:

1) The Depth Quality spec applies to calibrated depth modules and depth cameras.

2) For Depth Quality metric definitions and test methodology, refer to white paper "Intel® RealSense™ Camera Depth Testing Methodology"

3) Laser Power: 150mW, Exposure: Auto Exposure

4.6 Invalid Depth Band

The depth data generated with stereo vision uses the left imager as the reference for stereo matching resulting in a non-overlap region in the field of view of left and right imager where we will not have depth data at the left edge of the frame. Closer scenes result in a wider invalid depth band than scenes at further distances.

Figure 4-1. Left Invalid Depth Band

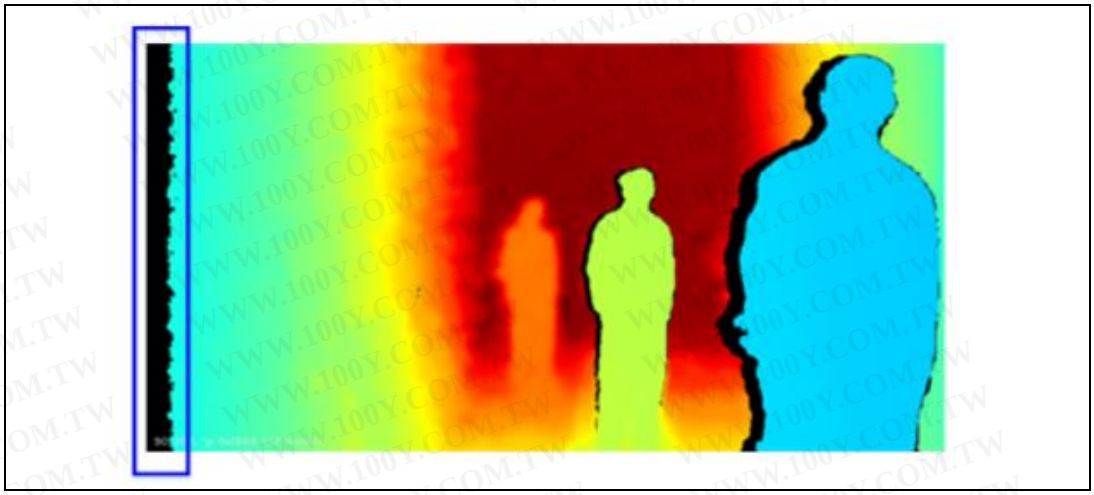

The width of the invalid depth band can be calculated using the following formula:
In terms of horizontal FOV
DBR (ratio of Invalid depth band to total horizontal image) = B/[2*Z*tan(HFOV/2)];
Invalid Depth Band (in pixels) = HRes*DBR

In terms of focal length
DBR = B*F/[Z*HRes]
Invalid Depth Band = B*F/Z

B= baseline
Z= distance
F= focal length
HFOV= horizontal depth FOV
HRes = horizontal resolution

4.7 Depth Start Point (Ground Zero Reference)

The depth start point or the ground zero reference can be described as the starting point or plane where depth = 0. For depth modules (D400, D410 & D415), this point is referenced from front of lens or from backside of module. For depth cameras (D415 and D435), this point is referenced from front of camera cover glass

Figure 4-2. Depth Module Depth Start Point Reference

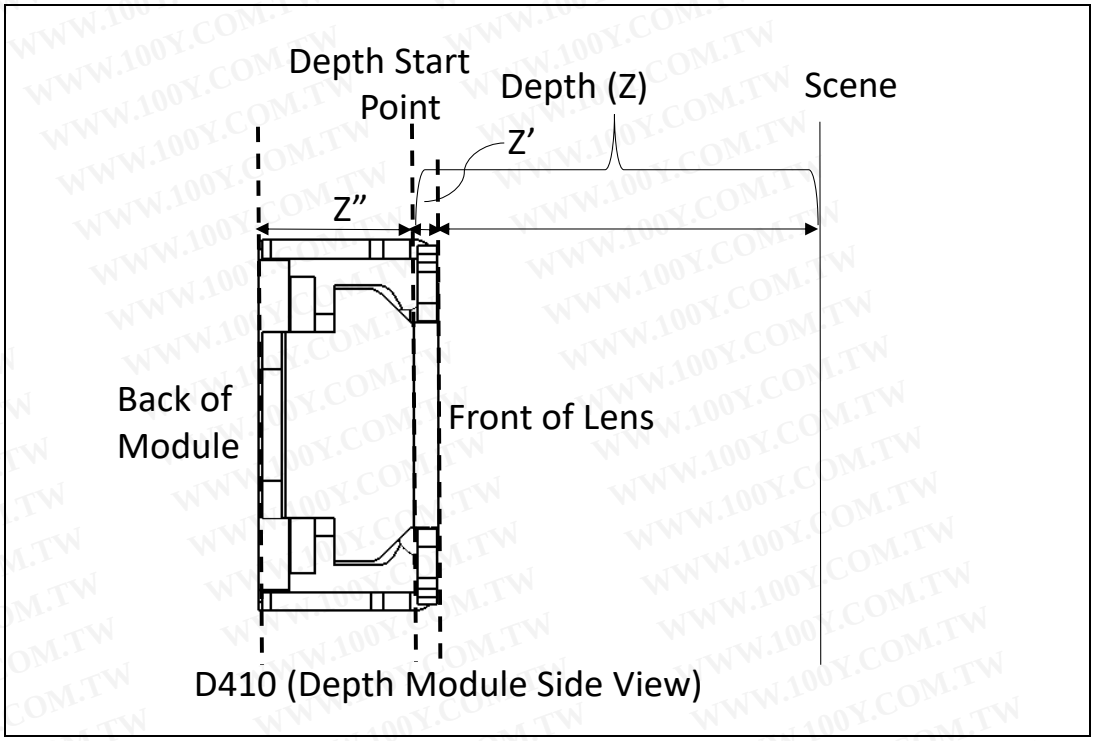

Table 4-8. Depth Module Depth Start Point

Depth Module	Front of Lens **(Z')**	Back of Module **(Z")**
D400/D410/D415	-0.1mm	4.3mm
D420/D430	-3.2mm	7.5mm

NOTES:

If depth measurement reference is front of lens, then |Z'| should be added to measured value to determine Ground Truth. If depth measurement reference is back of module, then |Z"| should be subtracted to determine Ground Truth.

Figure 4-3. Depth Camera Depth Start Point Reference

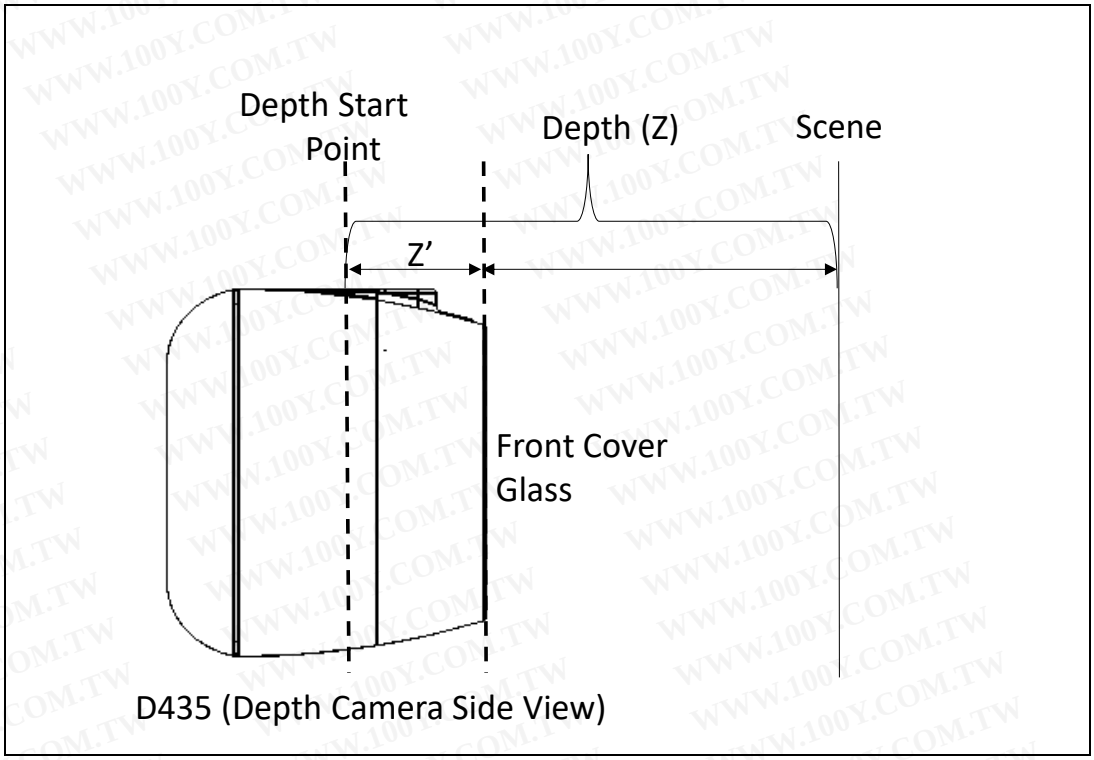

Table 4-9. Depth Cameras Depth Start Point

Depth Camera	Camera Front Glass (Z')
D415	-1.1mm
D435	-4.2mm

NOTES:

If depth measurement reference is front cover glass, then |Z'| should be added to measured value to determine Ground Truth.

4.7.1 Depth Origin X-Y Coordinates

The depth origin X-Y coordinates is the X-Y center of left imager.

Figure 4-4. Depth Module X-Y Depth Origin Reference

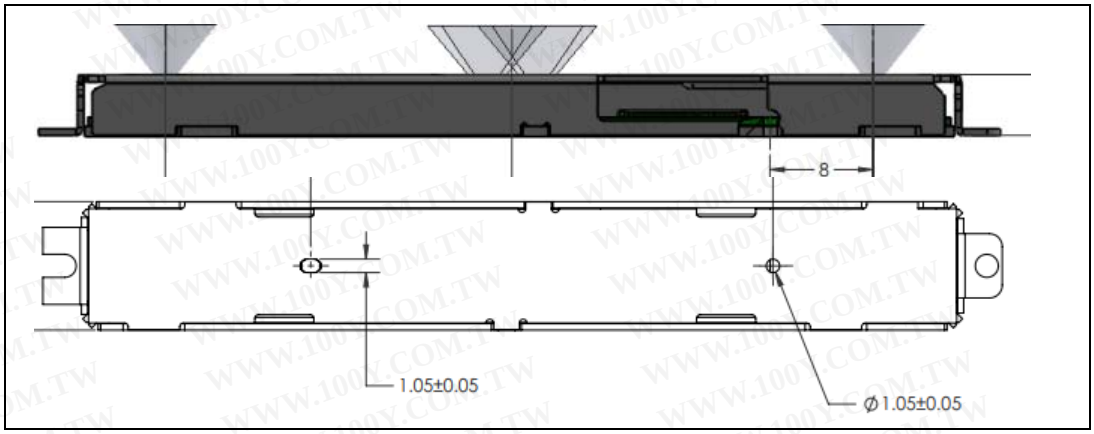

Table 4-10. Depth Module X-Y Depth Origin Coordinates

Depth Module	Left Alignment hole[1] to Left imager Center
D400	8mm
D410	8mm
D415	8mm
D420	8mm
D430	8mm

NOTES:

1. Left alignment hole on bottom stiffener of depth module
2. Left alignment hole and left imager center is on depth module centerline.

Figure 4-5. Depth Camera X-Y Depth Origin Reference

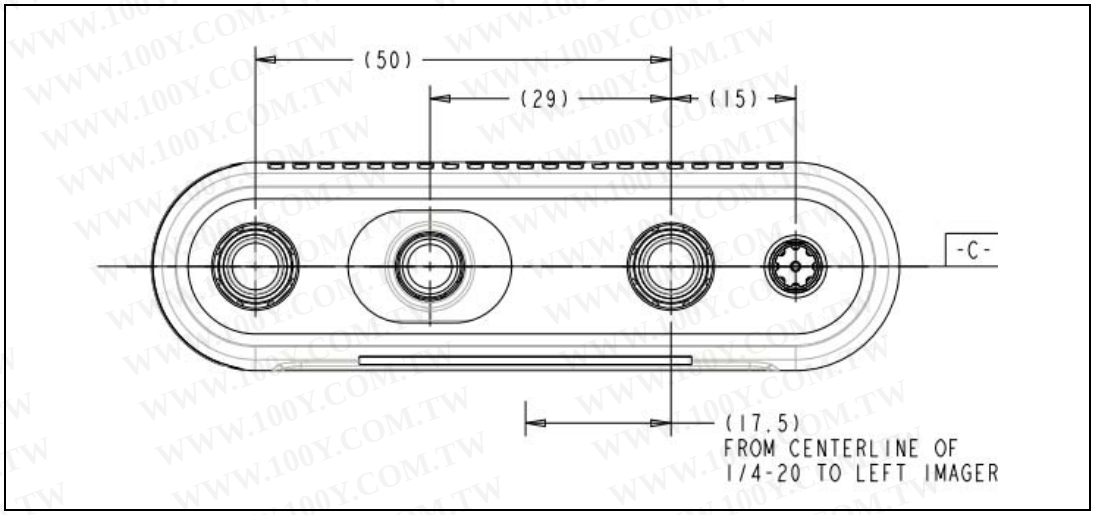

Table 4-11. Depth Camera X-Y Depth Origin Coordinates

Depth Camera	From Centerline of ¼-20[1] To Left Imager
D415	20mm
D435	17.5mm

NOTES:

1. Center of tripod mounting hole (1/4-20)

4.8 Depth Camera Functions

D4 exposes the following Depth image settings.

Table 4-12. Depth Camera Controls

Control	Description	Min	Max
Manual Exposure(1) (ms)	Control sensor exposure period (400/410)	1	166
Manual Exposure(1) (ms)	Control sensor exposure period (430)	1	166
Manual gain(1) (Gain 1.0 = 16)	Control sensor digital gain.	16	248
Laser Power (on/off) (On = 1)	Power to IR Projector	0	1
Manual Laser Power (mW)	Laser Power setting (30mW steps)	0	360

Control	Description	Min	Max
Auto Exposure Mode (Enable = 1)	Auto Exposure Mode. When Auto Exposure is enabled, Exposure and Gain are set based on the environment condition	0	1
Auto Exposure ROI	Perform Auto Exposure on a selected ROI	T-0 L-0 B-1 R-1	T-719 L-1279 B-720 R-1280
Preset	Set Controls parameters based on Camera Usage		
Meta Data Control	Enable/Disable Metadata	0	1

NOTES:

(1) – Not supported in Auto Exposure Mode

T - Top, L – Left, B - Bottom, R – Right

4.9 Color Camera Functions

Table 4-13. RGB Exposed Controls

Control	Description	Min	Max
Auto-Exposure Mode	Automatically sets the exposure time and gain for the frame.	0x1	0x8
Manual Exposure Time	Sets the absolute exposure time when auto-exposure is disabled.	41	10000
Brightness	Sets the amount of brightness applied when auto-exposure is enabled.	-64	64
Contrast	Sets the amount of contrast based on the brightness of the scene.	0	100
Gain	Sets the amount of gain applied to the frame if auto-exposure is disabled.	0	128
Hue	Sets the amount of hue adjustment applied to the frame.	-180	180
Saturation	Sets the amount of saturation adjustment applied to the frame.	0	100
Sharpness	Sets the amount of sharpening adjustment applied to the frame.	0	100
Gamma	Sets amount of gamma correction applied to the frame.	100	500
White Balance Temperature Control	Sets the white balance when AWB is disabled.	2800	6500

Control	Description	Min	Max
White Balance Temperature Auto (AWB)	Enables or disables the AWB algorithm.	0	1
Power Line Frequency	Specified based on the local power line frequency for flicker avoidance.	0	3
Backlight Compensation	Sets a weighting amount based on brightness to the frame.	0	1
Low Light Comp	Low Light Compensation	0	1

§§

5 Firmware

The firmware contains the operation instructions. Upon runtime, Vision Processor D4 loads the firmware and programs the component registers. If the Vision Processor D4 is configured for update or recovery, the unlocked R/W region of the firmware can be changed.

5.1 Update

During a firmware update, the firmware utility will issue a device firmware update command to the Vision Processor D4. The Vision Processor D4 will then reset into firmware update mode. The firmware utility uses a single binary file to maintain the firmware image. The firmware utility compares the firmware version installed on the camera to the firmware version file to be updated. Based on the comparison, the firmware utility will downgrade, upgrade, or skip if the versions match.

5.1.1 Update Limits

The firmware update engine does not allow infinite update cycles between older and current versions of firmware. The engine will establish a baseline version of firmware based on the latest firmware version installed. The engine will allow a return to a previous version or baseline version of firmware up to 20 times. After the 20th update, the engine will only allow an update to a firmware revision higher than the baseline version.

5.2 Recovery

A read only boot sector is built into firmware which enables basic operation regardless of the integrity of the operation instructions region. This ensures the imaging system can function in the case of firmware not be written properly. When a firmware recovery is required, the firmware utility will communicate with the recovery driver to set the DFU pin low and reset the imaging system in recovery mode.

Firmware Recovery can also be externally triggered by having controllable interrupt connected to the Vision Processor D4 DFU (Device Firmware Update) pin.

The firmware recovery sequence will be triggered by the firmware client utility. This client utility will communicate through ACPI _DSM to trigger the controllable interrupt (GPIO) at the appropriate times. The firmware recovery requires an ACPI _DSM interface to control the interrupt GPIO in configuring to firmware recovery state. The _DSM methods and BIOS use the Write to GPIO functions to set the controllable interrupt.

§ §

6 Software

6.1 Intel® RealSense™ Software Development Kit 2.0

Intel® RealSense™ SDK 2.0 is a cross-platform library for working with Intel® RealSense™ D400 Series. It is open source and available on https://github.com/IntelRealSense/librealsense

The SDK at a minimum includes:

- Intel® **RealSense™ Viewer** - This application can be used view, record and playback depth streams, set camera configurations and other controls.
- Depth Quality Tool - This application can be used to test depth quality, including: distance to plane accuracy, Z accuracy, standard deviation of the Z accuracy and fill rate.
- Debug Tools - These command line tools gather data and generate logs to assist in debug of camera.
- Code Examples - Examples to demonstrate the use of SDK to include D400 Series camera code snippets into applications.
- Wrappers -Software wrappers supporting common programming languages and environments such as ROS, Python, Matlab, node.js, LabVIEW, OpenCV, PCL, .NET and more

§§

7 System Integration

The small size of the stereo depth module and the separate placement of Vision Processor D4 provides system integrators flexibility to design into a wide range of products. Because the camera uses stereo vision technology, it is crucial that the stereo depth module does not flex throughout its service life. This creates unique mechanical and thermal implementation guidance. This section explains how to correctly integrate D4 depth camera into a system

7.1 System Level Block Diagram

Figure 7-1. System Block Diagram

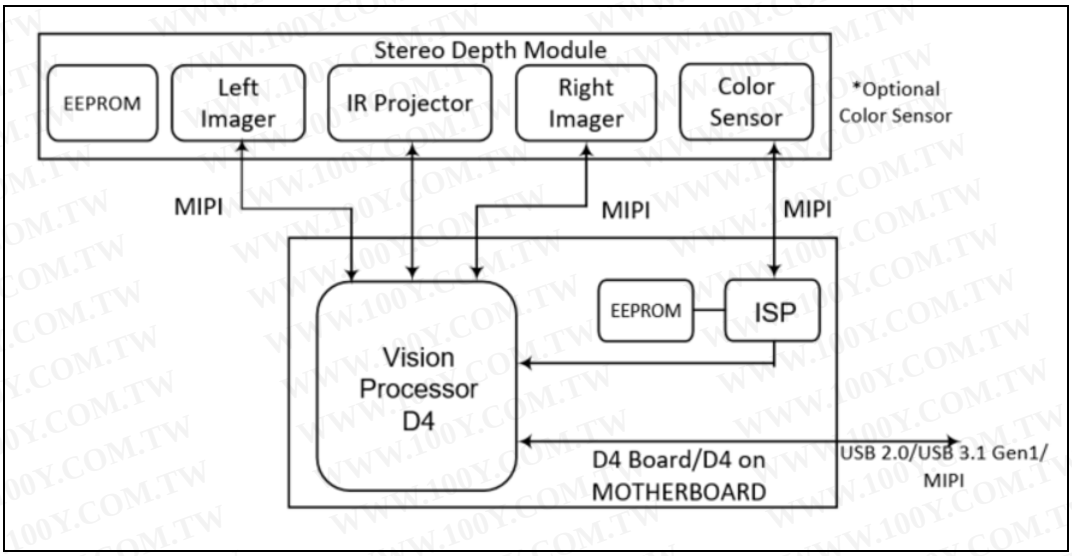

7.2 Vision Processor D4 System Integration

There are two options to integrate Vision Processor D4 into a system, either by integration of Vision Processor D4 Board or having the Vision Processor D4 and support components directly on the host processor motherboard. Vision Processor D4 Board simplifies system design and integration of the D4 depth camera system and Vision Processor D4 on Motherboard allows for a space optimized implementation of the D4 depth camera system.

7.2.1 Vision Processor D4 Board

The Vision Processor D4 Board has a standard USB Type-C connector and requires an appropriate USB Type-C cable to connect to a standard USB 2.0/USB 3.1 Gen 1 external port.

Figure 7-2. Intel® **RealSense™ Vision Processor D4 Board**

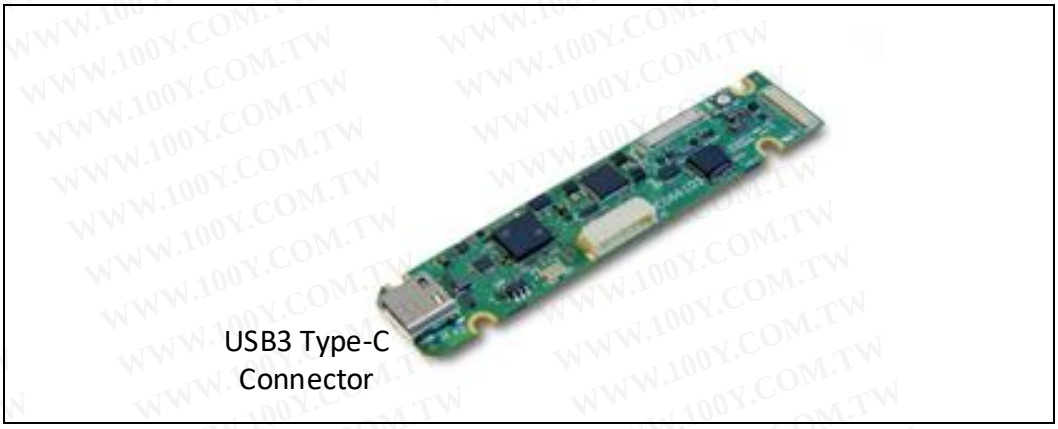

7.2.2 Vision Processor D4 on Motherboard

In the Vision Processor D4 on Motherboard option, Vision Processor D4 and support components are directly placed on the host processor motherboard. The depth module receptacle is on the host processor motherboard for connection to the stereo depth module.

Figure 7-3. Vision Processor D4 on Motherboard (Illustration)

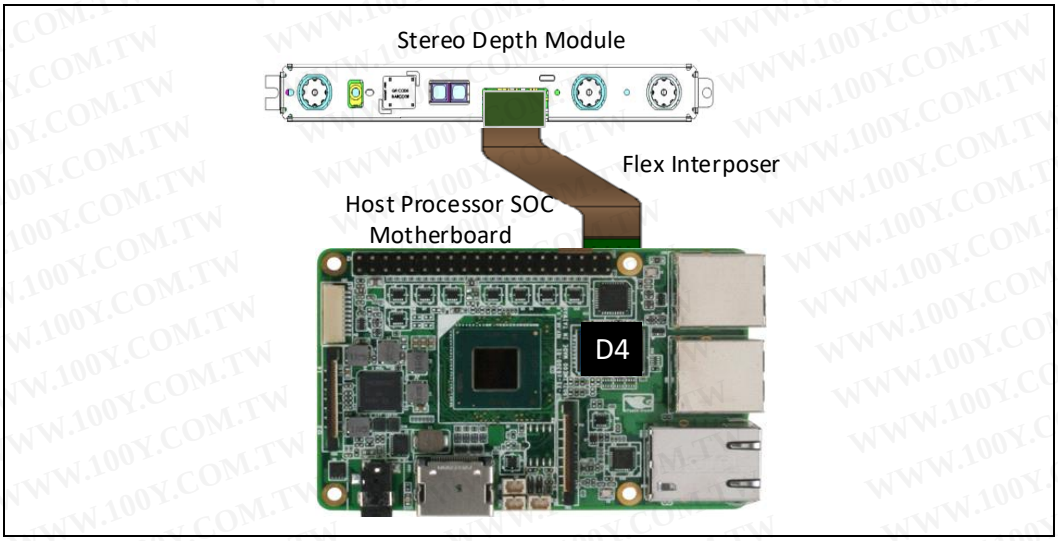

7.2.2.1 Firmware Update

SPI flash chip assembled onto the motherboard requires a bootable firmware image for Vision Processor D4 to boot or to run the firmware update utility provided by Intel.

There are two options program flash with firmware image or to recover a corrupt firmware image.

1. Pre-program SPI flash chip with firmware before assembly on to motherboard or replace corrupt image with a good image SPI flash chip. The blank SPI flash chip can pre-programmed using a compatible adapter (i.e. PA8QFN8D) and supporting flash programmer.
2. A header or test points is connected in parallel to the SPI flash chip, then programmed directly with an SPI flash programmer. Vision Processor D4 SPI interface is put in high Z state by strapping EPGPIO4 pin to Ground when programmed directly with an SPI flash programmer.

7.3 D4 Camera System Power Delivery

D4 camera system MUST keep stereo depth module and the Vision Processor D4 on the same power rails. The stereo depth module holds a safety region in EEPROM that is configured by firmware protected region. Keeping all components on the same rail prevents malicious software reset of the stereo depth module without causing a reset to the ASIC. By this protection we make sure that all the safety logic is kept locked as long as the device is active. Ensure power delivery implementation recommendation in Chapter 12 are followed in the design of D4 camera system.

Figure 7-4. D4 Camera System Power Scheme

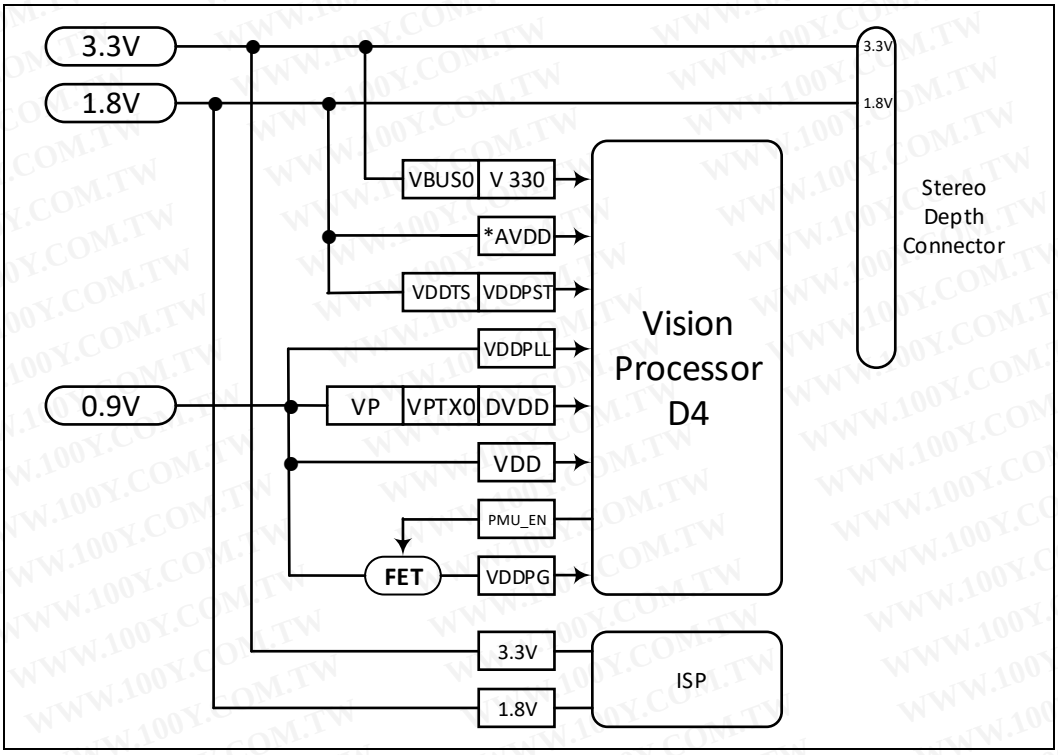

7.4 Vision Processor D4 Board for Integrated Peripheral

In design of custom host processor motherboard with custom Vision Processor D4 Board for embedded applications, a low mechanical profile 10 pin USB 3.1 Gen 1 receptacle can be implemented on motherboard and Vision Processor D4 Board.

7.4.1 USB 3.1 Gen 1 Receptacle

Table 7-1. USB 3.1 Gen 1 Receptacle Characteristics

PROPERTY	DESCRIPTION	DIAGRAM
Shell Finish	Tin (Sn)	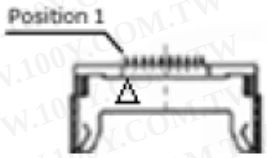
Lock	Yes	
Ground Bar	Yes	
Alignment Boss	No	
Part Number	IPEX 20347-310E-12R	

Table 7-2. USB 3.1 Gen 1 Receptacle Pin Out

POSITION	NAME	TYPE	DESCRIPTION
1	GND	-	Ground
2	USB3_SS$_{TX-}$	OUT	USB 3.1 Gen 1 Transmitter Negative
3	USB3_SS$_{TX+}$	OUT	USB 3.1 Gen 1 Transmitter Positive
4	GND	-	Ground
5	USB3_SS$_{RX-}$	IN	USB 3.1 Gen 1 Receiver Negative
6	USB3_SS$_{RX+}$	IN	USB 3.1 Gen 1 Receiver Positive
7	GND	-	Ground
8	DFU	IN	Device Firmware Update
9	3.3V	-	Supply Voltage, Connect to 3.3V
10	3.3V	-	Supply Voltage, Connect to 3.3V

7.4.2 USB 3.1 Gen 1 High Speed Cable Assembly

The high speed cable assembly is developed and procured by the system integrator. The cable assembly design is specific to the system definition and must meet cable assembly design specification.

Table 7-3. USB 3.1 Gen 1 Plug Characteristics

PROPERTY	DESCRIPTION	DIAGRAM
Shell Finish	Tin (Sn)	

Friction Lock	Yes	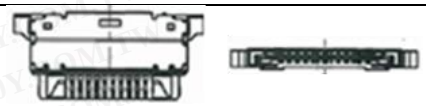
Ground Bar	Yes	
Plug Part Number	IPEX 2047-0103	
Housing Part Number	IPEX 20346-010T-31	

Table 7-4. Cable Assembly Specification

PROPERTY	DESCRIPTION
Cable Length	15 inches (max)
Controlled Impedance	85 Ohms with a tolerance of ± 10%.
Max Insertion Loss	<= 7.5 dB @2.5GHz
Cable Shielding	Each plug connected to the receptacle shield and GND bar.

The Transmit to receive pair crossover is expected on the Motherboard and not the cable assembly. This is done to allow for flat cable assemblies.

7.4.3 Transmit to Receive Crossover

The host USB 3.1 Gen 1 transmit signals must be connected to the Vision Processor D4 USB 3.1 Gen 1 receive signals. The host USB 3.1 Gen 1 receive signals must be connected to the Vision Processor D4 USB 3.1 Gen 1 transmit signals. It is recommended not to cross over the signals in the cable to allow cable wiring to be flat and as thin as possible.

Figure 7-5. Host Motherboard USB 3.1 Gen 1 Routing

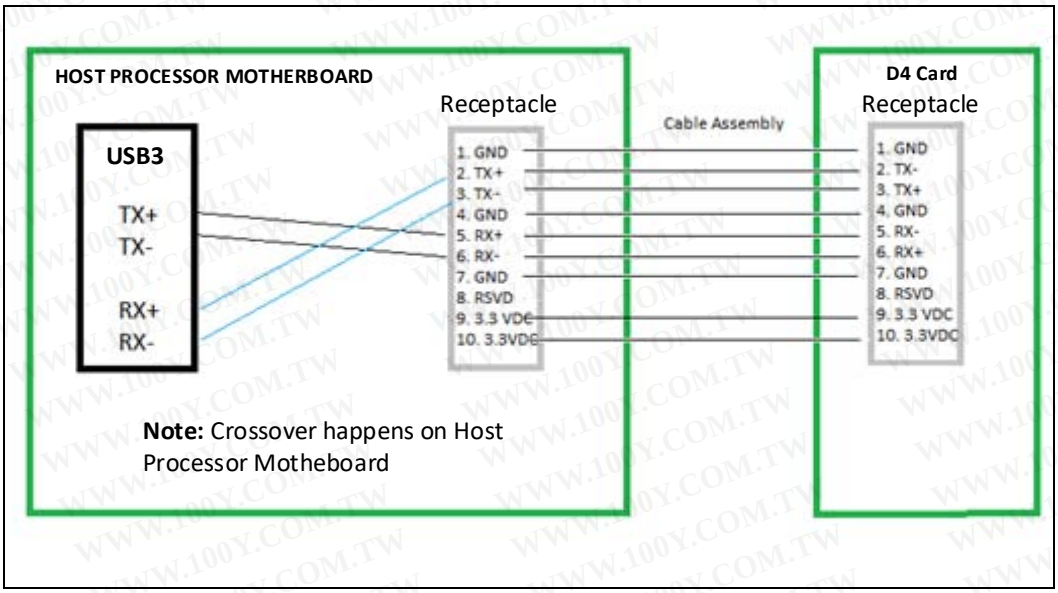

7.4.4 Motherboard Receptacle

Table 7-5. Motherboard Receptacle Properties

PIN	WIRE DESCRIPTION
Shielding	Metal shielding, connected to GND plane.
Grounding	Two ground bar connections in addition to the connector GND.

It is recommended that the motherboard receptacle be grounded as well as ground bar pads implemented.

Figure 7-6. Receptacle Ground Bar Motherboard Connections

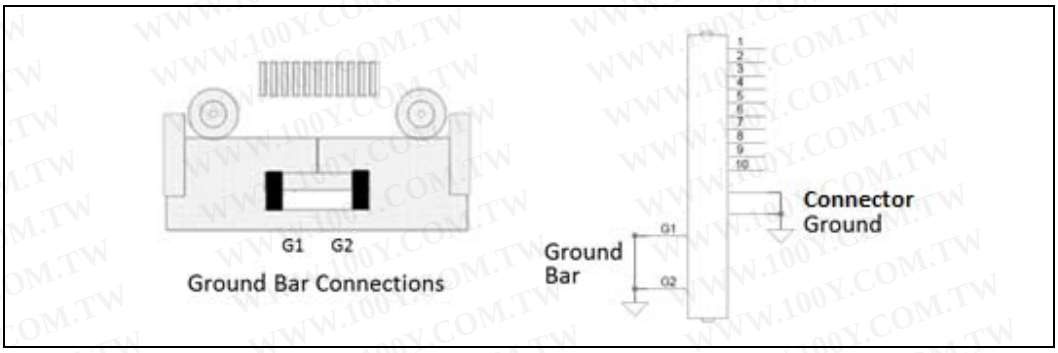

7.4.5 Vision Processor D4 Board for Integrated Peripheral Power Requirements

The Vision Processor D4 Board is powered by 5V from host processor motherboard through USB 3.1 Gen 1 receptacle pins 9 and 10

Table 7-6. Vision Processor D4 Board as Embedded Peripheral Power Requirements

Parameter		Min	Nom	Max	Unit
VCC	Supply Voltage	+/-5%	5V		V
ICC	Supply Current			700	mA

7.5 Thermals

The system thermal design must ensure the component case temperature are not exceeded. Thermal models for Vision Processor D4 board and Depth modules are available to conduct a thermal evaluation and validate the system thermal design.

Table 7-7. Vision Processor D4 Board – Component Power and TDP at Max Operating Mode[1]

Component	Power	TDP	Unit
Vision Processor D4	618	618	mW
Color Camera ISP	196.83	196.83	mW
Voltage Regulators/Other	491.64	491.64	mW
All Components	1306.47	1306.47	mW

Table 7-8. Stereo Depth Module (Standard) – Component Power and TDP at Max Operating Mode[1]

Component	Power	TDP	Unit
Left Imager	118.5	118.5	mW
Right Imager	118.5	118.5	mW
IR Projector	1296	946[2]	mW
Color Sensor	118.5	118.5	mW
EEPROM + Thermal Sensor	4	4	mW
All Components	1655.5	1305.5	mW

Table 7-9. Stereo Depth Module (Wide) – Component Power and TDP at Max Operating Mode[1]

Component	Power	TDP	Unit
Left Imager	177	177	mW
Right Imager	177	177	mW
IR Projector	1620	1260[2]	mW
EEPROM + Thermal Sensor	4	4	mW
All Components	1978	1618	mW

1. Max. Operating Mode – Depth Resolution 1280X720 30FPS, Color Resolution - 1920X1080p 30FPS
2. The IR projector TDP is lower than power due to a percentage of energy dissipated as photonic emissions rather than heat.
3. Voltage Regulator power is included as part of the individual component power

Table 7-10. Vision Processor D4 Board Components – Case Temperature Limits (Still Air)

Component	Min	Max[1]	Unit
Vision Processor D4	0	110	˚C
Color Camera ISP	0	70	˚C

For the Depth Modules, case temperature is specified for the overall depth module and the thermocouple test location is any point on bottom metal stiffener

Figure 7-7. Bottom Stiffener Depth Module D410

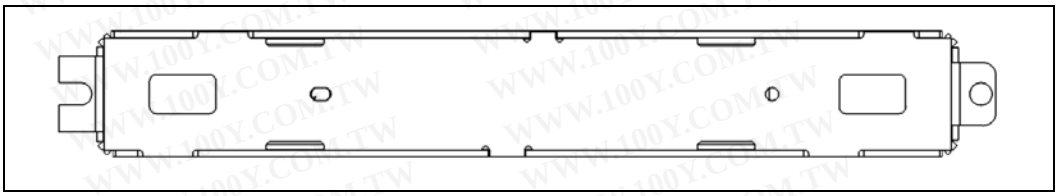

Figure 7-8. Bottom Stiffener Depth Module D430

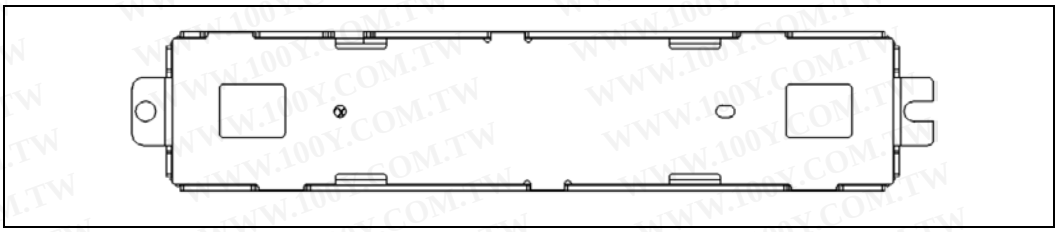

7.6 Stereo Depth Module Flex

It is critical that stereo depth module does not experience flex during system integration or during use after integration. Micron level flexing of the module can render the calibration incorrect and will result in poor performance or nonfunctional depth data. It is important for system designers to isolate the module from any chassis flex the system may encounter. While the module has a reinforcement housing, the housing is not intended to counter loads from chassis flex. The primary function of the housing is to prevent loss of calibration from handling and operating environments.

It is possible for the module to recover depth performance after experiencing permanent deformation. However, the module's ability to recover is dependent on the amount of deformation experienced.

7.7 Stereo Depth Module Mounting Guidance

7.7.1 Screw Mount

The stereo depth module incorporates a screw hole and a screw fork for module mounting. The stereo depth module should be mounted on a large heat sink or a heat dissipating structure element using M1.6 screw at the screw hole and fork. The recommended torque for both screws is 1.6Kgf*cm. Thermal interface material should be used on backside region of IR projector and two stereo imagers between camera module and heat sink or heat dissipating structure element for thermal transfer.

Figure 7-9. Stereo Depth Module Screw Mount

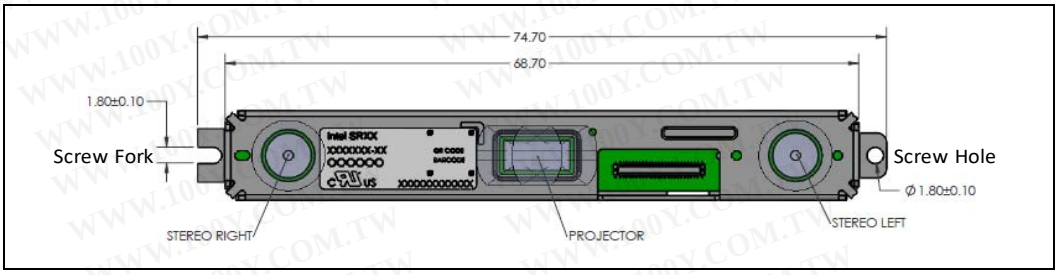

7.7.2 Bracket Mount

The Stereo Depth module should be mounted on large heat sink or a heat dissipating structure element using the bracket placed at the center of module. The bracket is made up of 0.35mm thickness stainless steel. The bracket is secured to the heat sink or structure element using two M1.6 screws with recommended torque of 1.6Kgf*cm. The rectangular (400/410 bracket) or circular (430 bracket) cutout is for thermal interface filler or as IR Projector opening when reversing bracket to mount. Thermal interface material should be used on backside region of IR projector and two stereo imagers between camera module and heat sink or heat dissipating structure element for thermal transfer. The camera module should have a minimum of 0.2mm clearance from all sides except for the area around bracket. It is not required to have screws at the screw hole and screw fork at both ends of module when mounting camera module using bracket.

Figure 7-10. Stereo Depth Module Bracket

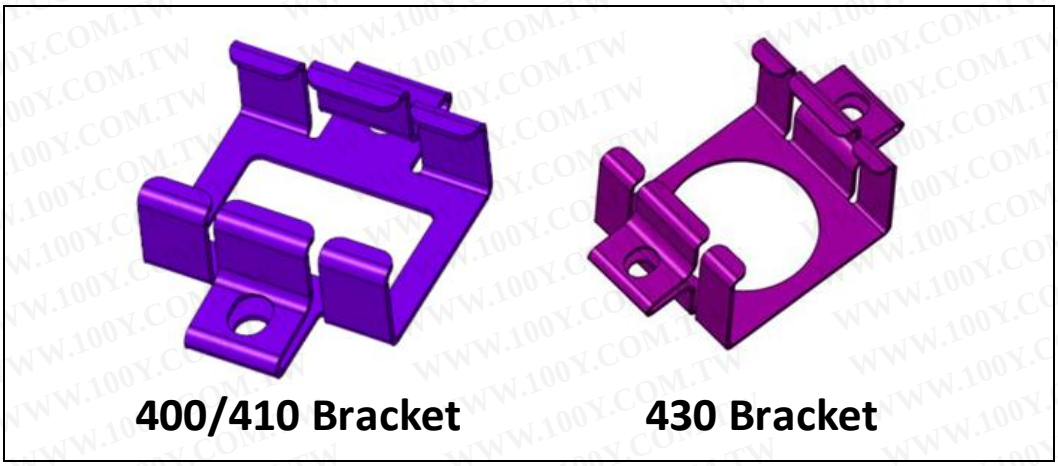

Figure 7-11. Stereo Depth Module Bracket Mount

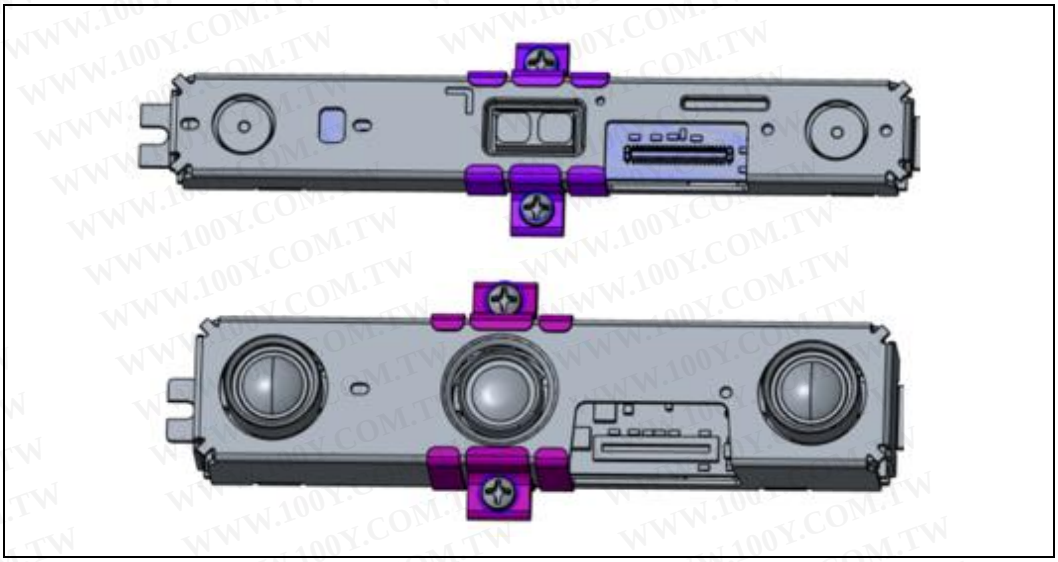

Figure 7-12. Stereo Depth Module Bracket Install

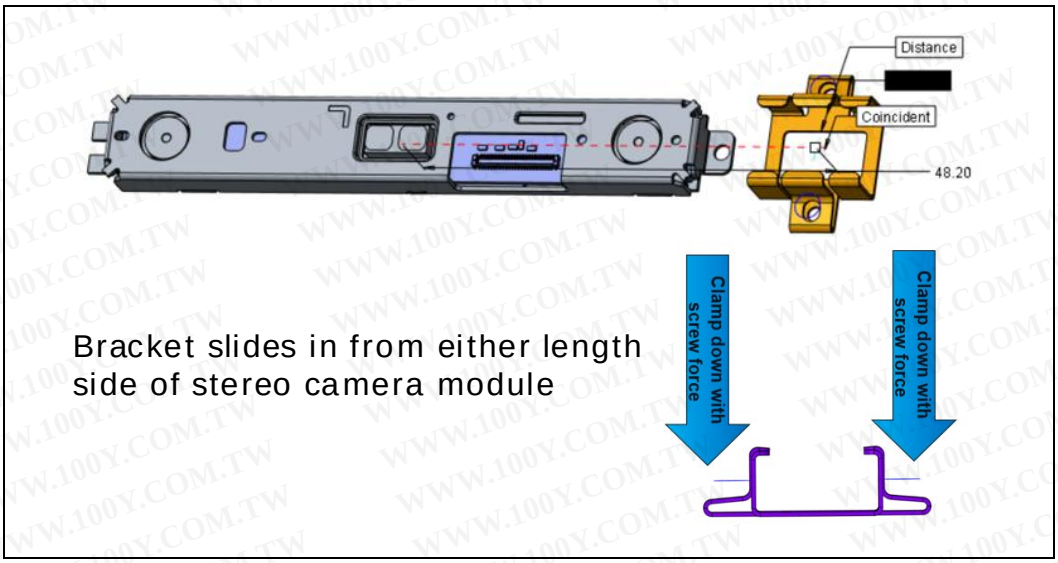

Table 7-11. Bracket Ordering Logistics

Vendor	Sales Contact
FASPRO Technologies, INC.	Chuck Drews chuck@acuproinc.com www.fasprotech.com (M) 847-612-2350 (O) 224-848-4131

7.7.3 Stereo Depth Module Air gap

A minimum 0.3mm air gap is recommended between highest components on the stereo depth module to the cover window

Figure 7-13. Stereo Depth Module Air Gap

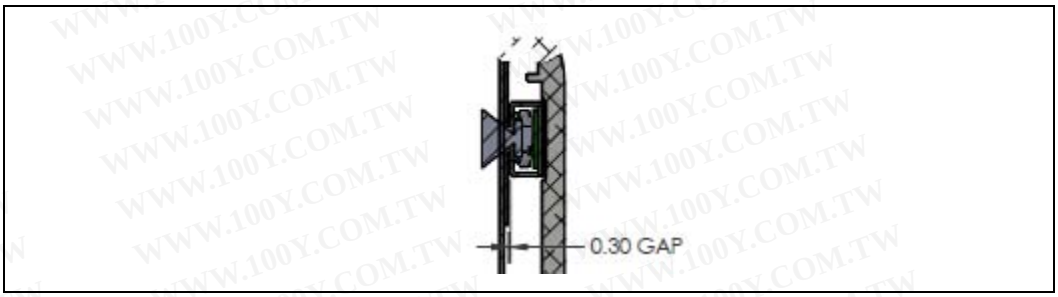

7.8 Thermal Interface Material

Thermal interface material, specifically thermal paste/grease is recommended to be inserted between the stereo depth module and the heat dissipating structure (heat sink) to improve the thermal coupling between these two components. A thermal paste with thermal conductivity in the 3-4W/mK range is recommended. This paste must be applied in a thin layer on the back side of the IR projector and also under the left and right imagers filling up the air gap under the Imagers.

7.9 Heat Sink

The heat sink or heat dissipating structure element used to mount stereo depth module and ASIC Board should be a minimum of 2-3mm in thickness. It is advisable to extend the heat sink by a few mm beyond the edges of the stereo depth module. It is also recommended to have thermal fins on the back side of the heat dissipating structure. In applications where weight is a concern, high thermal conductivity graphite tape can be attached to the back side of the heat sink. This graphite tape must be at least as big as the metal heat sink and extended out beyond the metal as much as possible for optimal cooling. Heat sink metal must be a high conductivity aluminum alloy or copper.
In cases where the module is expected to operate at high ambient temperatures, additional airflow may be required to ensure temperature limits are not exceeded. These are guidelines for thermal integration of the D4 camera in the system, however actual testing or system level thermal modeling is recommended before finalizing solution.

7.10 Cover Design and Material Guidance

The stereo depth module components must be covered to minimize dust and humidity. The transparent cover material stack-up used must provide acceptable transmission based on the component wavelengths. Anti-reflective coatings can help increase the transmission of cover material. Cover material that reduces light transmission can result in poor depth performance and will decrease the working

range of the camera. Nominally flat, non-distorting and low scattering cover material should be used.

Table 7-12. Component Transmission

Component	Wavelength	Unit
Left and Right Imager (Intel® RealSense™ D410/D430)	400 to 865 (Visible and Infrared) @ 98% transmission rate or higher at all viewing and transmitting angles	nm
Left and Right Imager (Intel® RealSense™ D400/D420)	Visible spectrum @ 98% transmission rate or higher at all viewing and transmitting angles	nm
IR Projector	850nm ± 15 nm @ 98% transmission rate or higher at all viewing and transmitting angles	nm

NOTES:

1. Higher transmissions @ 98% transmission rate or higher is recommended and not a requirement.
2. Intel RealSense Camera 400-Series provides control over laser power and sensor exposure. Minor loss of transmission due to cover material transmissivity might be compensated by increasing exposure when less light is able to reach the sensors and by increasing laser power for IR projector pattern projection loss.
3. Uncoated clear acrylic (plexiglass) plastic cover is an example for cover material
4. Anti-reflective coatings can help increase the transmission of cover material.

If different cover material is used in front of the cameras and the IR projector to maximize transmission based on component wavelengths, cover design considerations should ensure that the FOV of the cameras and FOP of the IR projector are not impacted.

If different cover material is used in front of the cameras and the IR projector to maximize transmission based on component wavelengths, cover design considerations should ensure that the FOV of the cameras and FOP of the IR projector are not impacted.

7.11 Gaskets

Gaskets are recommended for providing optical isolation and dust protection. However, gaskets can impede FOV and place unwanted stress on the module or the individual sensor lens holders.

Gasket static force can deform the cosmetic baffle/lens holder resulting in poor image quality and permanent damage to the camera. Gaskets placed on the module stiffener can transfer chassis flex into the camera module causing loss of depth data. Gasket thickness has a large effect on the static force applied to the module surface. The thinner the seal, the greater the static force applied. Once the gasket is compressed, the static force will increase exponentially.

Figure 7-14. Illustration of Gasket Placement and Cover Material

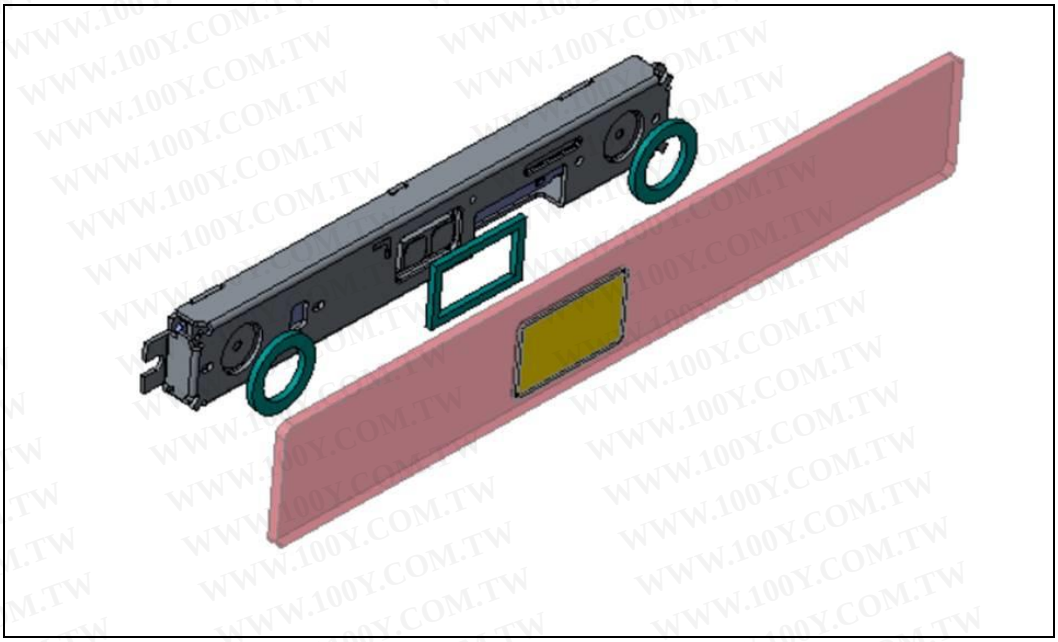

7.11.1 Optical Isolation

It is recommended to isolate the left/right imagers and IR projector from each other to prevent reflections off the cover material. Not properly isolating the cameras can result in leakage light as shown in Figure 7-15. Example of Light Leakage Effects

To prevent light leakage, it is recommended to use a gasket material in between the cover holes and the module. The gasket material needs to be compliant so that it does not transmit chassis flex forces to the module.

Figure 7-15. Example of Light Leakage Effects

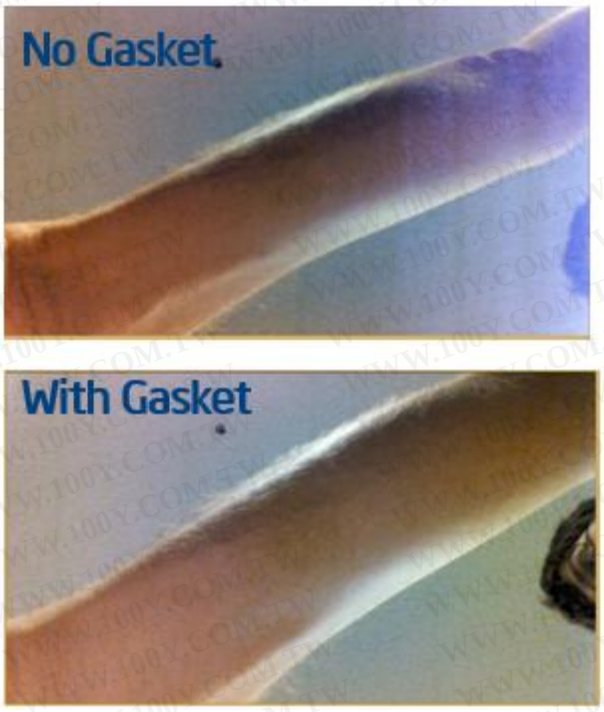

7.11.2 Dust Protection

Dust particles can accumulate over the camera lenses which can be visually unappealing and degrade image quality.

7.12 Firmware Recovery

To support firmware recovery, a 3.3V controllable interrupt must be connected to the Vision Processor D4 DFU (Device Firmware Update) pin

The ability to recovery the image system if the firmware becomes corrupted requires D4 reset and DFU pin driven high for 160ms. The DFU pin should remain high when D4 is out of reset for D4 to boot in DFU mode. The 160ms ensures that the DFU pin is held high through the reset sequence.

Figure 7-16. Firmware Recovery Sequence

Sequence	Timing Diagram
Firmware Recovery	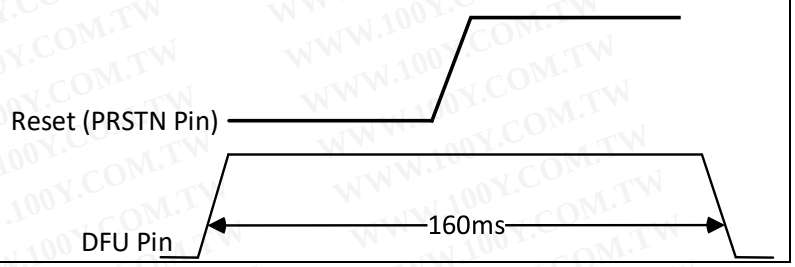

7.13 Calibration Support

It is required to have an accessible USB port to access the host system. The accessible USB port would allow to stream images reliably to an external PC to determine calibration parameters and to write back camera calibration parameters via the host system

The USB port should be able to be configured in a mode where the USB port can access the host. The access to USB port is required at manufacturing and not intended to be available on shipped product or to end user.

7.14 Multi-Camera Hardware Sync

Intel® RealSense™ D400 Series supports hardware sync signal for multi-camera configuration. For multiple cameras to be hardware synchronized as to capture at identical times and frame rates, pins 5 (SYNC) and pins 9 (Ground) on external sensor sync connector will need to be connected. The external sensor sync connector is on Vision Processor D4 board and is accessible on Depth Cameras.

Figure 7-17. External Sensor Sync Connector Location on D4 Vision Processor D4 Board

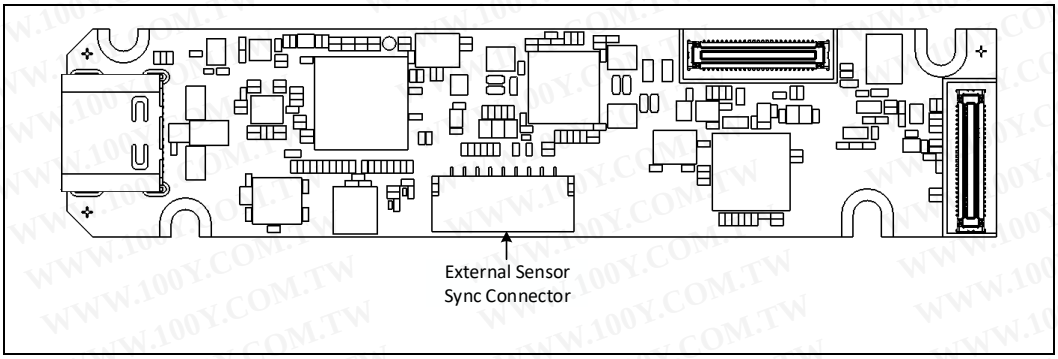

Figure 7-18. External Sensor Sync Connector Location on Depth Camera D435

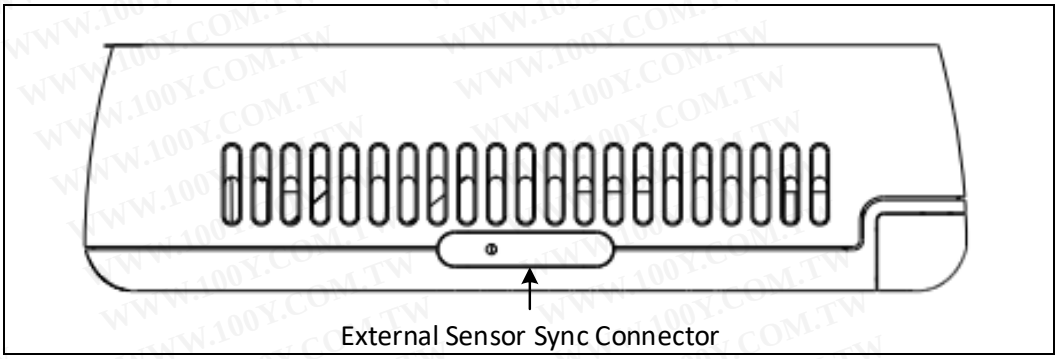

For additional details on how to implement the multi-camera hardware sync feature, please refer to multi-camera white paper at https://realsense.intel.com/intel-realsense-downloads/#whitepaper.

7.15 Handling Conditions

Table 7-13. Electrostatic Discharge Caution

To provide a consistent ESD protection level during D4 system assembly and rework, it is recommended that the JEDEC JESD625-A requirements standard be incorporated into the ESD environment controls.

§ §

8 Platform Design Guidelines

The Platform Design Guidelines has been developed to ensure maximum flexibility for board designers while reducing the risk of board related issues. Design recommendations are based on Intel's simulations and are strongly recommended.

8.1 Vision Processor D4 on Motherboard

This Design Guidelines provides Vision Processor D4 on motherboard implementation recommendations for the Kaby Lake U/Y (7th Generation Intel® Core™ Processors) and Cherry Trail T4 (Intel® Atom™ Z8000 Processor Series) platforms with 8/10 layer Type 4 PCB.

Supported platform topologies are:

1. Vision Processor D4 with USB Host Interface
2. Vision Processor D4 with MIPI Host Interface
3. Vision Processor D4 on Board for USB Integrated Peripheral

Figure 8-1. Vision Processor D4 with USB Host Interface

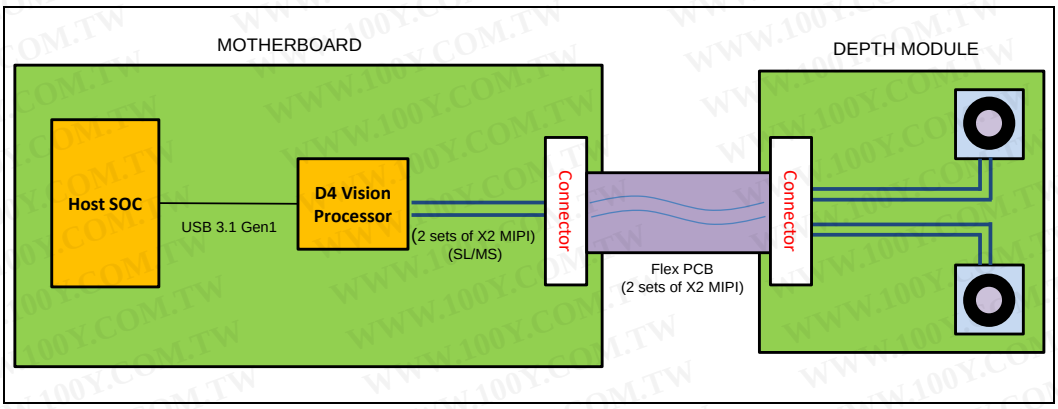

Figure 8-2. Vision Processor D4 with MIPI Host Interface

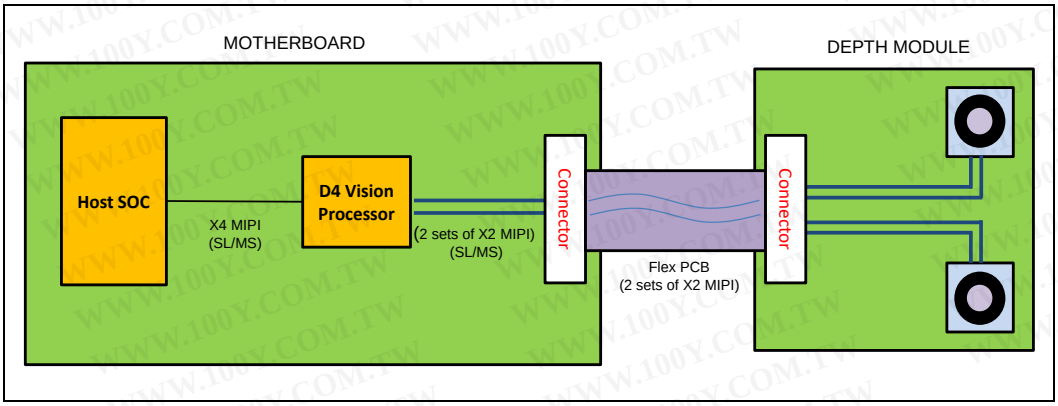

Figure 8-3. Vision Processor D4 on Board for USB Integrated Peripheral

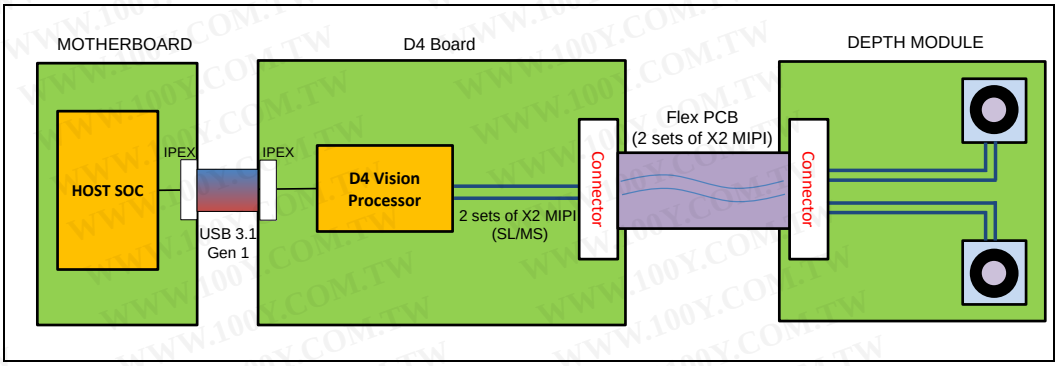

8.2 Kaby Lake U and Kaby Lake Y platforms

8.2.1 Kaby Lake Platform Introduction

The Kaby Lake U platform consists of a Kaby Lake U processor plus a Kaby Lake Platform Controller Hub (PCH) in the same Multi Chip Package (MCP). Similarly the Kaby Lake Y platform consists of a Kaby Lake Y processor plus a Kaby Lake PCH in the same Multi Chip Package (MCP).

Note: For Kaby Lake U/Y platform design guidelines, refer Kaby Lake U and Y Platform Design Guide. (Doc# 561280)

8.2.2 Supported PCB Stack-Up and Routing Geometries

Refer to Kaby Lake U/Y Platform Design Guide for type 4 PCB stack up, Breakout/Breakin geometries, Main Route stripline/microstrip geometries and Via recommendations. It is strongly recommended to follow the given impedance criteria in the design guide for the given interface.

8.2.3 Vision Processor D4 on Motherboard with USB Host Interface

8.2.3.1 USB 3.1 Gen 1 Motherboard Routing

Figure 8-4. Host Processor - Vision Processor D4

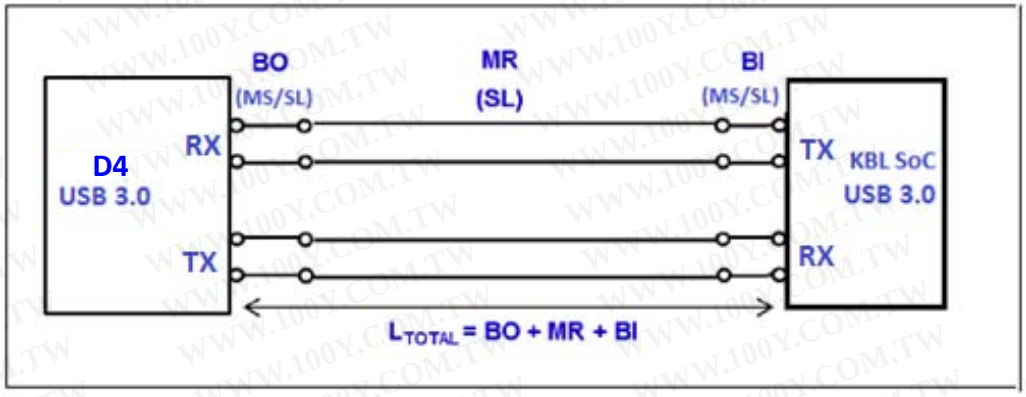

Table 8-1. Host Transmit – Vision Processor D4 Receive Routing Guidelines

Parameter	Breakout (BO)	Main Route (MR)	Breakin (BI)	Total Allowed Length (L_BO + L_MR + L_BI)
Maximum Segment Length (Inches)	0.25	15-BO-BI	0.25	15
Maximum Allowed Channel Insertion loss (dB)				<=15 dB @2.5MHz

Table 8-2. Vision Processor D4 Transmit - Host Receive Routing Guidelines

Parameter	Breakout (BO)	Main Route (MR)	Breakin (BI)	Total Allowed Length (L_BO + L_MR + L_BI)
Maximum Segment Length (Inches)	0.25	15-BO-BI	0.25	15
Maximum Allowed Channel Insertion loss (dB)				<=15 dB @2.5MHz

NOTES:

- Simulation results shows that overall 15 inch channel routing is good for USB 3.1 Gen 1 Vision Processor D4 to Host connection motherboard. This connection does not include any connector or cable.
- All routing is recommended to be 85 ohm impedance.

- Breakout/Breakin should be maximum length of 250 mil for 85 ohm routing, if there is any impedance variation due to narrow escape BGA breakout, the maximum routing length should be 150mil.
- Maximum number of via count:4 (including package microvia)
- It is strongly recommended that overall channel loss is within -15dB for satisfactory performance.

8.2.4 Vision Processor D4 on Motherboard with MIPI Host Interface

8.2.4.1 MIPI Motherboard Routing

Figure 8-5. Vision Processor D4 Transmit - Host Receive

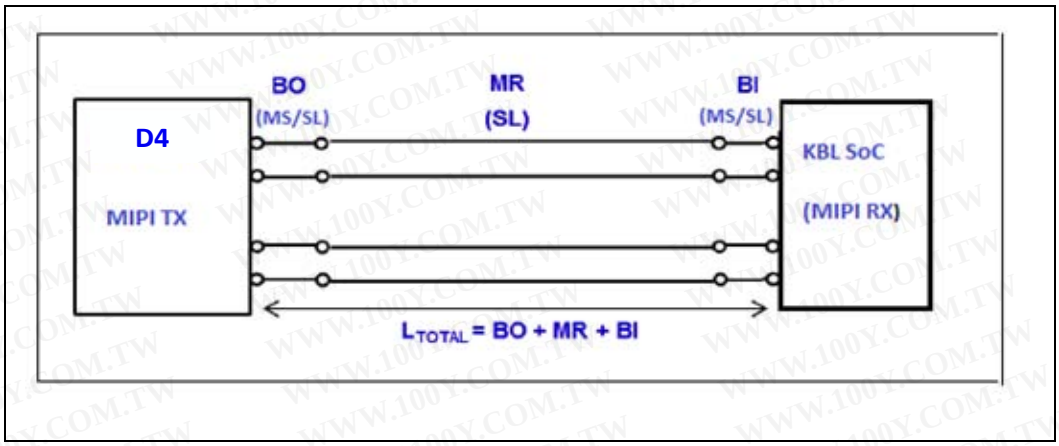

Table 8-3. Vision Processor D4 Transmit – Host Receive Routing Guidelines

Parameter	Breakout (BO)	Main Route (MR)	Breakin (BI)	Total Allowed Length (L_BO + L_MR + L_BI)
Maximum Segment Length (Inches)	0.25	15-BO-BI	0.25	15
Maximum Allowed Channel Insertion loss (dB)				<=5.5 dB @750MHz

NOTES:

- Maximum via count = 4 vias including the first micro-via from package ball.
- Minimum stripline breakout pair-to-pair spacing of 2.36 mils is allowed near package ball out region with maximum length of 250 mils.
- Main route and Break-in nominal impedance is required to be consistent. Example: 85 ohm main route and 85 ohm break-in. Mixture of nominal impedance is not recommended.
- Length matching within a differential pair is +/- 5 mils maximum.

- The maximum allowed channel insertion loss budget dictates the total allowed length. The total insertion loss allowed for interconnect from the D4 package die bump to Kaby Lake SoC package die bump is about 5.5dB at 750 MHz. It should be noted that though only the insertion loss value at the fundamental frequency (750 MHz) is specified, the insertion loss curve up to about 1.5 GHz should be well behaved with no strong resonance or ripple.

8.2.4.2 MIPI Motherboard Routing (Stereo Depth Module Transmit to Vision Processor D4 Receive)

Figure 8-6. Stereo Depth Transmit - Vision Processor D4 Receive

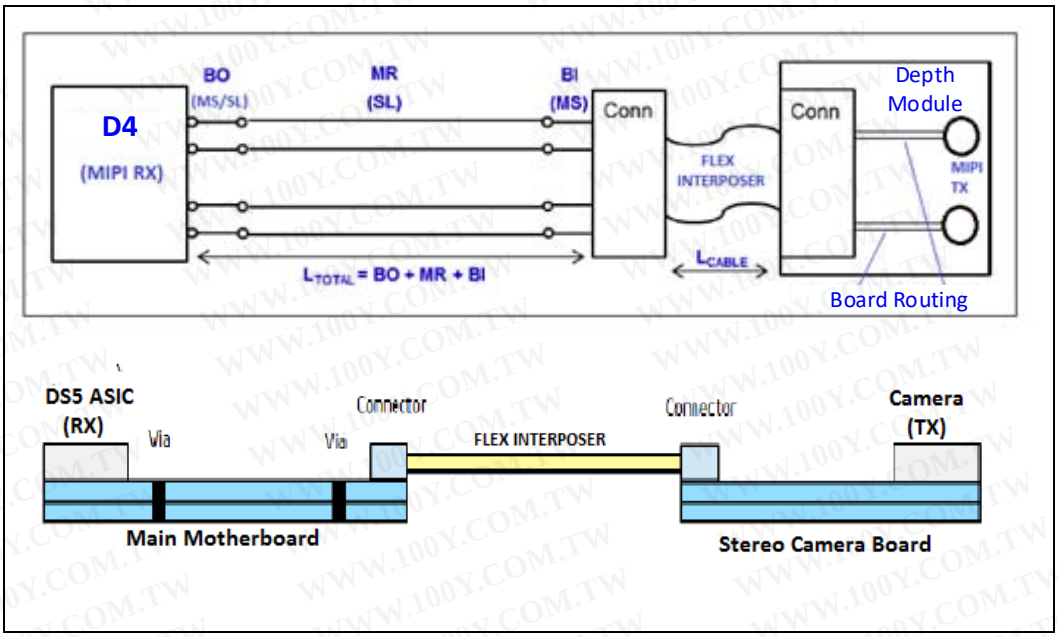

Table 8-4. Stereo Depth Module Transmit - Vision Processor D4 Receive Routing Guidelines

Parameter	Breakout (BO)	Main Route (MR)	Breakin (BI)	Flex Interposer Length (L_Cable)	Camera Board Length (L_Camera)	Total Allowed Length (L_MB + L_Cable + L_Camera)
Maximum Segment Length (Inches)	0.25	15 – L_Cable - L_Camera – BO - BI	0.25	15-L_MB-L_camera	L_Camera (max ~2 inches)	15
Maximum Allowed Channel Insertion loss (dB)						<=5.5 dB @750MHz

NOTES:

- Stereo depth module MIPI routing length are assumed to be 2 inches (max)
- Maximum via count = 3 vias including the first micro-via from package ball.

- Minimum stripline breakout pair-to-pair spacing of 2.36 mils is allowed near package ball out region with maximum length of 250 mils.
- Main route and Break-in nominal impedance is required to be consistent. Example: 85 ohm main route and 85 ohm break-in. Mixture of nominal impedance is not recommended.
- Length matching within a differential pair is +/- 5 mils maximum.
- No length match requirements for signals routed to different camera modules.
- The maximum allowed channel insertion loss budget dictates the total allowed length. The total insertion loss allowed for interconnect from the package die bump to the connector on the camera module is about 5.5dB at 750 MHz as shown in the table. This recommendation allows the use of any cable type as long as the maximum allowed insertion loss is met. It should be noted that though only the insertion loss value at the fundamental frequency (750 MHz) is specified, the insertion loss curve up to about 1.5 GHz should be well behaved with no strong resonance or ripple.
- Flex Interposer recommendation: 85-100ohm impedance with maximum length of 4-6 inches. The recommended interposer should be Flex PCB based design.

Figure 8-7. Flex Interposer PCB Stack-Up

TOP	CONDUCTOR	COPPER	0.984252
	DIELECTRIC	FR-4	2.578740
02_SIG1	CONDUCTOR	COPPER	0.708661
	DIELECTRIC	FR-4	1.968500
03_PWR1	CONDUCTOR	COPPER	0.708661
	DIELECTRIC	FR-4	31.771700
04_GND1	CONDUCTOR	COPPER	0.708661
	DIELECTRIC	FR-4	1.968500
05_SIG2	CONDUCTOR	COPPER	0.708661
	DIELECTRIC	FR-4	2.578740
BOTTOM	CONDUCTOR	COPPER	0.984252

8.2.5 Vision Processor D4 Board for Integrated Peripheral (USB 3.1 Gen 1 Host to Vision Processor D4 Routing)

Figure 8-8. USB 3.1 Gen 1 Host to Vision Processor D4 Topology

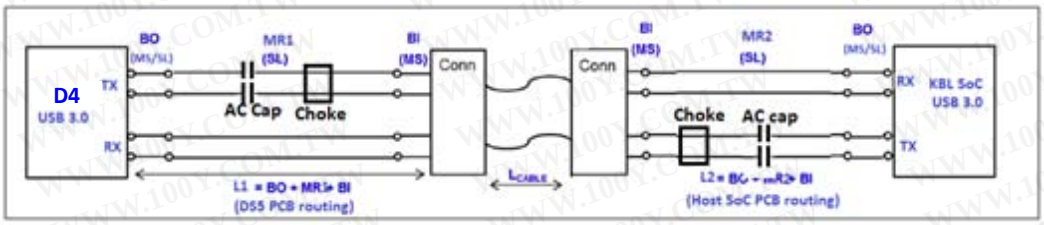

Table 8-5. USB 3.1 Gen 1 Host to Vision Processor D4 Routing Guidelines

	Vision Processor D4 Board			USB 3.1 Gen 1 Cable	Host Motherboard		
Parameter	Breakout (BO)	Main Route (MR)	Breakin (BI)	Cable Length (L_Cable)	Breakout (BO)	Main Route (MR)	Breakin (BI)
Maximum Segment Length (Inches)	0.25	2	0.25	15 (max)	0.25	5	0.25
Maximum Allowed Channel Insertion loss (dB)	<= 15 dB @ 2.5GHz Max recommended USB 3.1 Gen 1 cable loss <= 7.5 dB @2.5GHz						

NOTES:

- The maximum allowable motherboard routing of USB 3.1 Gen 1 signals on Host PCB should be 5-6inch inch and routing on Vision Processor D4 Board should be 2-3inch.
- It is recommended that an 85 ohm common mode choke (CMC) be designed in line with both the USB 3.1 Gen 1 signals. The CMC should be placed as close to the connector as possible.
- It is required that a 0.1µF AC coupling capacitor is designed in series with both the USB 3.1 Gen 1 signals.
- The USB 3.1 Gen 1 cable assembly should have a differential impedance of 85 Ohms with a tolerance of ± 10%.
- The max cable length should not exceed 15 inch with target loss of 7.5dB@2.5GHz
- Overall channel loss including cable should not exceed 15dB @2.5GHz

8.2.6 USB2.0 Design Guidelines (USB2 Host to Vision Processor D4 Routing)

Figure 8-9. USB2.0 Host to Vision Processor D4

Parameter	Breakout (BO)	Main Route (MR)	Breakin (BI)	Total Allowed Length (L_BO + L_MR + L_BI)
Maximum Segment Length (Inches)	0.25	15-BO-BI	0.25	15
Maximum Allowed Channel Insertion loss (dB)				

NOTES:

- Simulation results shows that overall 15 inch channel routing is good for USB2.0 D4 to Host topology on motherboard. This topology does not include any connector or cable.
- All routing is recommended to be 85 ohm
- Breakout/breakin should be max of 250mil for 85ohm routing, if there is any impedance variation due to narrow escape BGA breakout, the max routing should be 150mil.
- Maximum number of via count:4 (including package microvia)
- It is strongly recommended that overall channel loss to be within -15dB for satisfactory performance

8.3 Cherry Trail T4 Platform

8.3.1 Cherry Trail T4 Platform Introduction

The Cherry Trail T4 is the Intel Architecture (IA) SoC that integrates the Intel® processor core, Graphics, Memory Controller, and I/O interfaces into a single system-on-chip solution.

Note: For Cherry Trail T4 platform design guidelines, refer Cherry Trail T4 Platform Design Guide. (Doc# 537901)

Note: Cherry Trail platform supports 2 SoC skus, T3 and T4. The Vision Processor D4 platform design guidelines discussed in this chapter are only applicable to T4 based Cherry Trail platform. For information on Cherry Trail T4 SoC, refer to Intel® Atom™ Z8000 Processor Series - External Design Specification (EDS) (Doc# 539071)

8.3.2 Vision Processor D4 Platform Design Guidelines

The Vision Processor D4 platform design guidelines on Cherry Trail T4 platform would follow the same guidelines specified for Kaby Lake U and Y platforms.

8.3.2.1 Supported PCB Stack-Up and Routing Geometries

Refer to Cherry Trail T4 Platform Design Guide for Type 4 PCB stack up, Breakout/Breakin routing geometry, Main Route stripline/microstrip geometry and Via recommendations. It is strongly recommend to follow the given impedance criteria in the design guide for the given interface.

§§

9 Regulatory Compliance

9.1 System Laser Compliance

The Intel® RealSense™ D400 series certification is transferable to the system and no system recertification is required. However, the following statements and labels must be included in the user manual of the end product

9.1.1 Certification Statement

This product is classified as a Class 1 Laser Product under the EN/IEC 60825-1, Edition 3 (2014) internationally and IEC60825-1, Edition 2 (2007) in the US.

This product complies with US FDA performance standards under 21 CFR 1040.10 for laser products except for deviations pursuant to Laser Notice No. 50 dated June 24, 2007.

9.1.2 Explanatory Label

This device complies with US FDA performance standards for laser products except for deviations pursuant to Laser Notice No. 50 dated June24, 2007.

9.1.3 Cautionary Statements

System integrators should refer to their respective regulatory and compliance owner to finalize regulatory requirements for a specific geography.

Caution - Use of controls or adjustments or performance of procedures other than those specified herein may result in hazardous radiation exposure.

Do not power on the product if any external damage was observed.

There are no service/maintenance, modification, or disassembly procedures for the stereo module and infrared projector. The system integrator must either notify Intel or return modules before any failure analysis is performed.

Do not attempt to open any portion of this laser product.

Invisible laser radiation when opened. Avoid direct exposure to beam.

There are no user serviceable parts with this laser product.

Modification or service of the stereo module, specifically the infrared projector, may cause the emissions to exceed Class 1.

No magnifying optical elements, such as eye loupes and magnifiers, are allowed.

Do not try to update camera firmware that is not officially released for specific camera module SKU and revision.

9.1.4 Manufacturer's Information

Manufactured by Intel Corporation
2200 Mission College Blvd., Santa Clara, CA 95054 USA

9.1.5 US FDA Accession Number

Table 9-1. U.S. FDA Accession Number

Component	U.S. FDA accession numbers
Intel® RealSense™ Depth Module D410/D415	1420260-006
Intel® RealSense™ Depth Module D430	1420260-007

This accession number should be entered into Box B.1 of the Food and Drug Administration (FDA) 2877 Declaration for Imported Electronic Products Subject to Radiation Control Standards.

9.1.6 NRTL Statement

For the US and Canada market, this product has been tested and certified by UL and Nemko, and found to be compliant with all applicable requirements of the specifications below.

UL 60950-1 2nd Edition, CAN/CSA C22.2 No. 60950-1-07, Information Technology Equipment – Safety – Part 1: General Requirements

Both UL and Nemko are Nationally Recognized Testing Laboratories (NRTLs), recognized by US Occupational Safety and Health Administration (OSHA) as qualified to perform safety testing and certifications covered within its scope of recognition.

Figure 9-1. NRTL Certifications

Intel® RealSense™ Depth Module Intel® RealSense™ Vision Processor D4 Board	Intel® RealSense™ Depth Camera
www.ul.com/database NWGQ2.E466025, NWGQ8.E466025	60950 https://www.nemko.com/certification/product-certification/certificates Certificate #: NA201710801

9.2 Ecology Compliance

9.2.1 China RoHS Declaration

China RoHS Declaration

产品中有毒有害物质的名称及含量

Hazardous Substances Table

部件名称 Component Name	有毒有害物质或元素 Hazardous Substance					
	铅 Pb	汞 Hg	镉 Cd	六价铬 Cr (VI)	多溴联苯 PBB	多溴二苯醚 PBDE
相机 Camera	X	○	○	○	○	○
印刷电路板组件 Printed Board Assemblies	X	○	○	○	○	○

○：表示该有毒有害物质在该部件所有均质材料中的含量均在GB/T 26572标准规定的限量要求以下。

○: Indicates that this hazardous substance contained in all homogeneous materials of such component is within the limits specified in GB/T 26572.

×：表示该有毒有害物质至少在该部件的某一均质材料中的含量超出GB/T 26572标准规定的限量要求。

×: Indicates that the content of such hazardous substance in at least a homogeneous material of such component exceeds the limits specified in GB/T 26572. 对销售之日的所售产品,本表显示我公司供应链的电子信息产品可能包含这些物质。注意:在所售产品中可能会也可能不会含有所有所列的部件。 This table shows where these substances may be found in the supply chain of our electronic information products, as of the date of sale of the enclosed product. Note that some of the component types listed above may or may not be a part of the enclosed product.
除非另外特别的标注,此标志为针对所涉及产品的环保使用期限标志. 某些可更换的零部件可能会有一个不同的环保使用期限(例如,电池单元模块). 此环保使用期限只适用于产品在产品手册中所规定的条件下工作.   The Environment-Friendly Use Period (EFUP) for all enclosed products and their parts are per the symbol shown here, unless otherwise marked. Certain field-replaceable parts may have a different EFUP (for example, battery modules) number. The Environment-Friendly Use Period is valid only when the product is operated under the conditions defined in the product manual.

9.2.2 Waste Electrical and Electronic Equipment (WEEE)

"In the EU, this symbol means that this product must not be disposed of with household waste. It is your responsibility to bring it to a designated collection point for the recycling of waste electrical and electronic equipment. For more information, contact the local waste collection center or your point of purchase of this product."

§ §

10 Mechanical Drawings

Figure 10-1. Intel® **RealSense™ Depth Module D400**

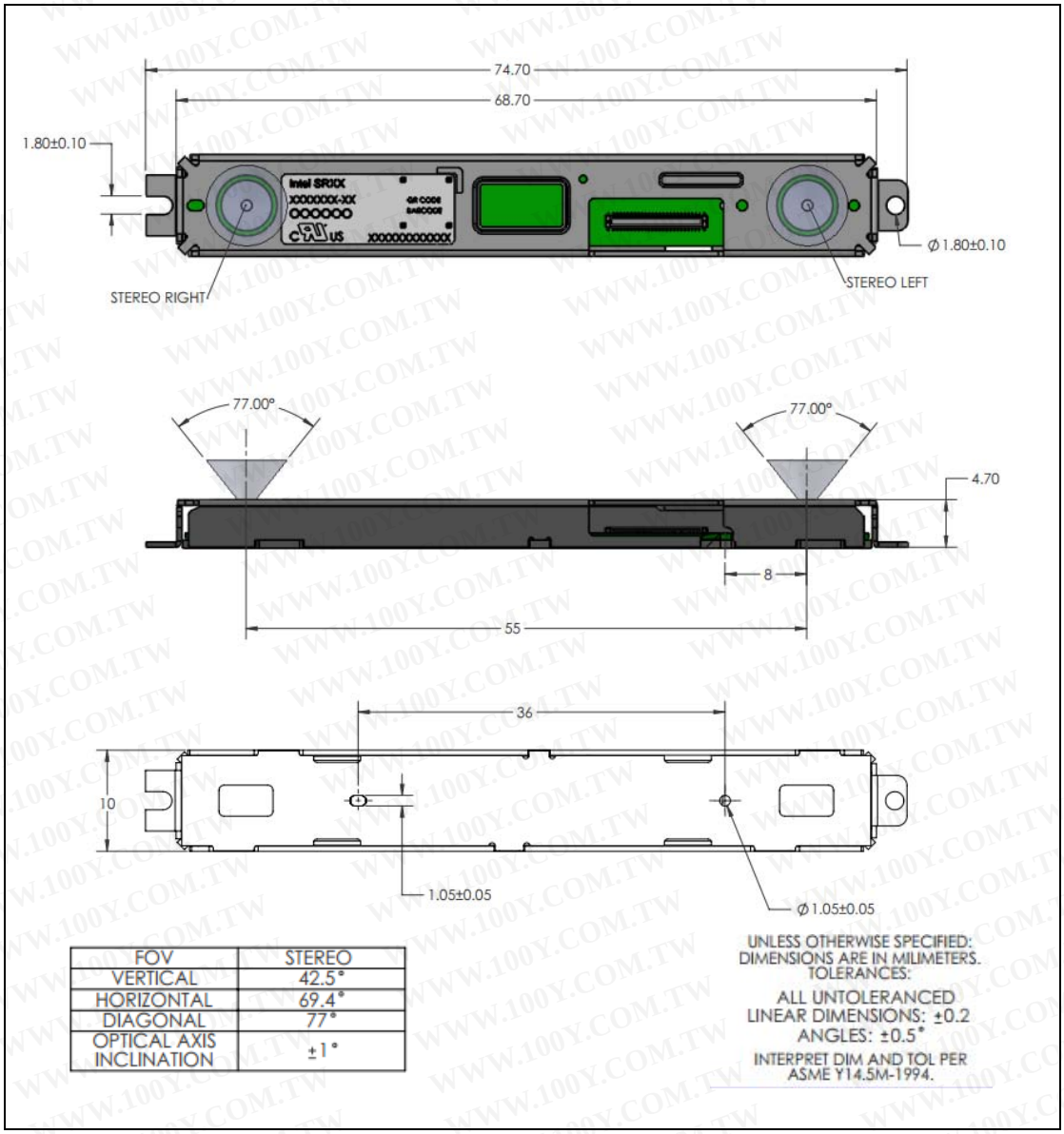

FOV	STEREO
VERTICAL	42.5°
HORIZONTAL	69.4°
DIAGONAL	77°
OPTICAL AXIS INCLINATION	±1°

Figure 10-2. Intel® **RealSense™ Depth Module D410**

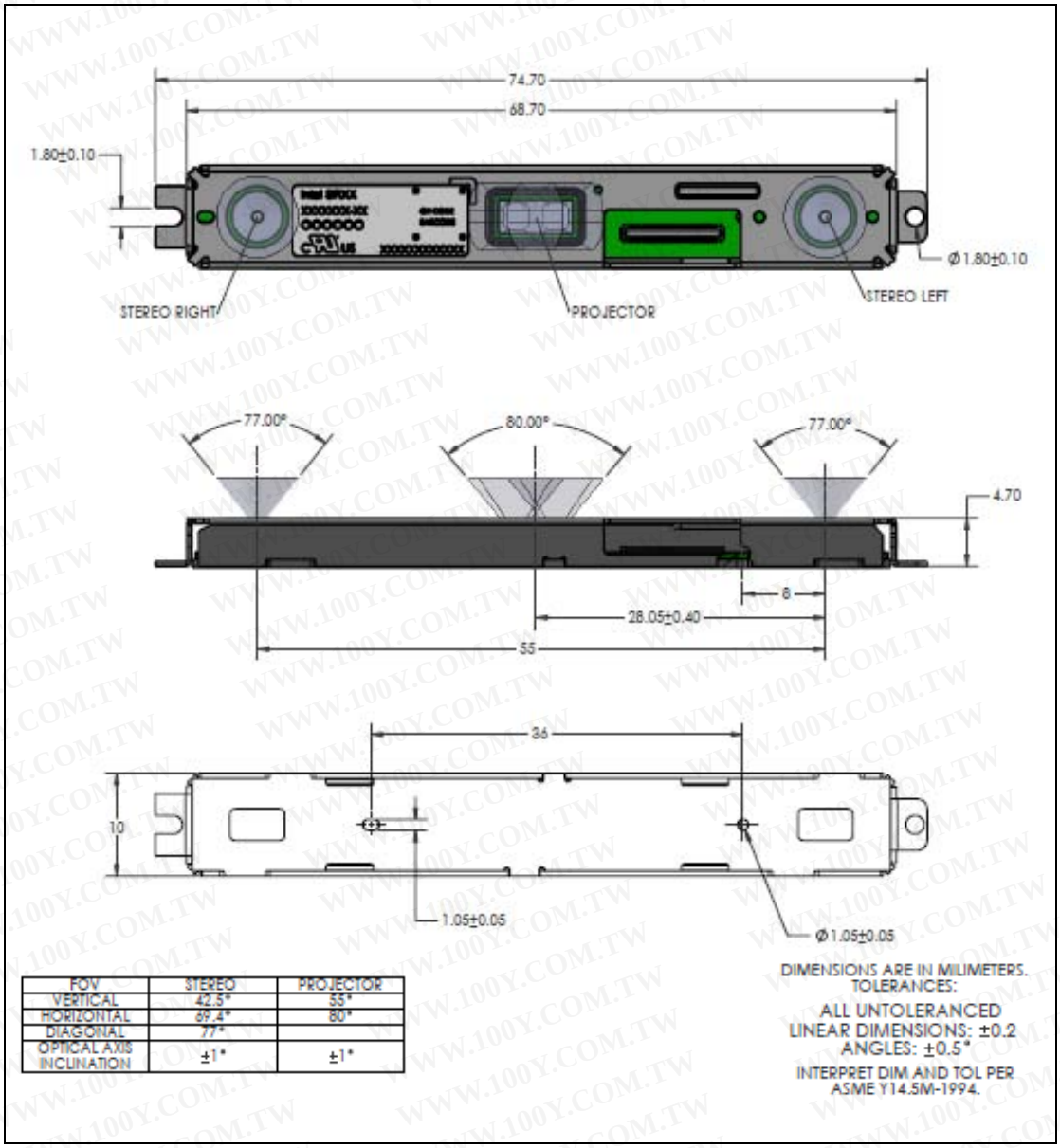

FOV	STEREO	PROJECTOR
VERTICAL	42.5°	55°
HORIZONTAL	69.4°	80°
DIAGONAL	77°	
OPTICAL AXIS INCLINATION	±1°	±1°

Figure 10-3. Intel® **RealSense™ Depth Module D415**

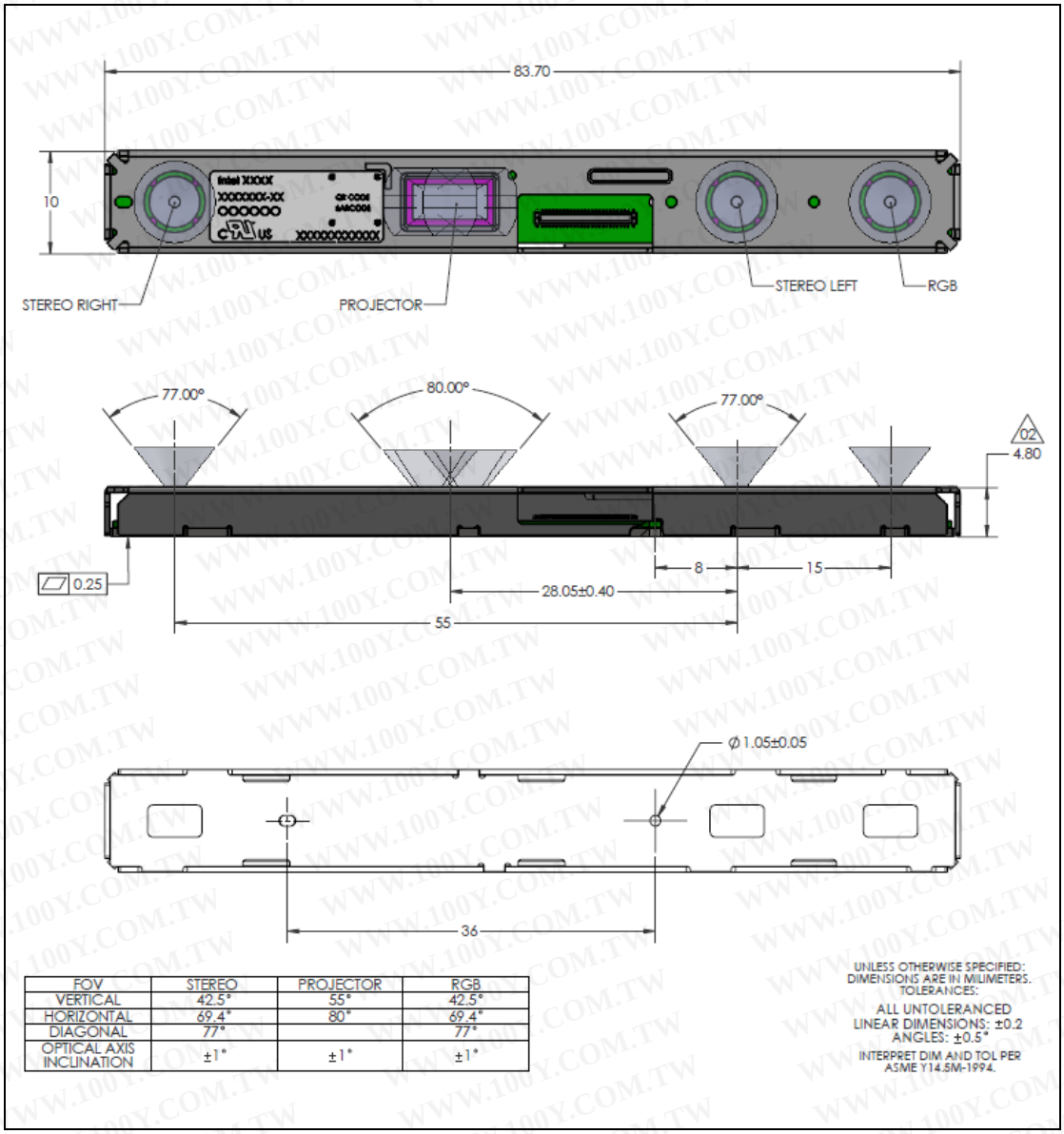

FOV	STEREO	PROJECTOR	RGB
VERTICAL	42.5°	55°	42.5°
HORIZONTAL	69.4°	80°	69.4°
DIAGONAL	77°		77°
OPTICAL AXIS INCLINATION	±1°	±1°	±1°

Figure 10-4. Intel® **RealSense™ Depth Module D420**

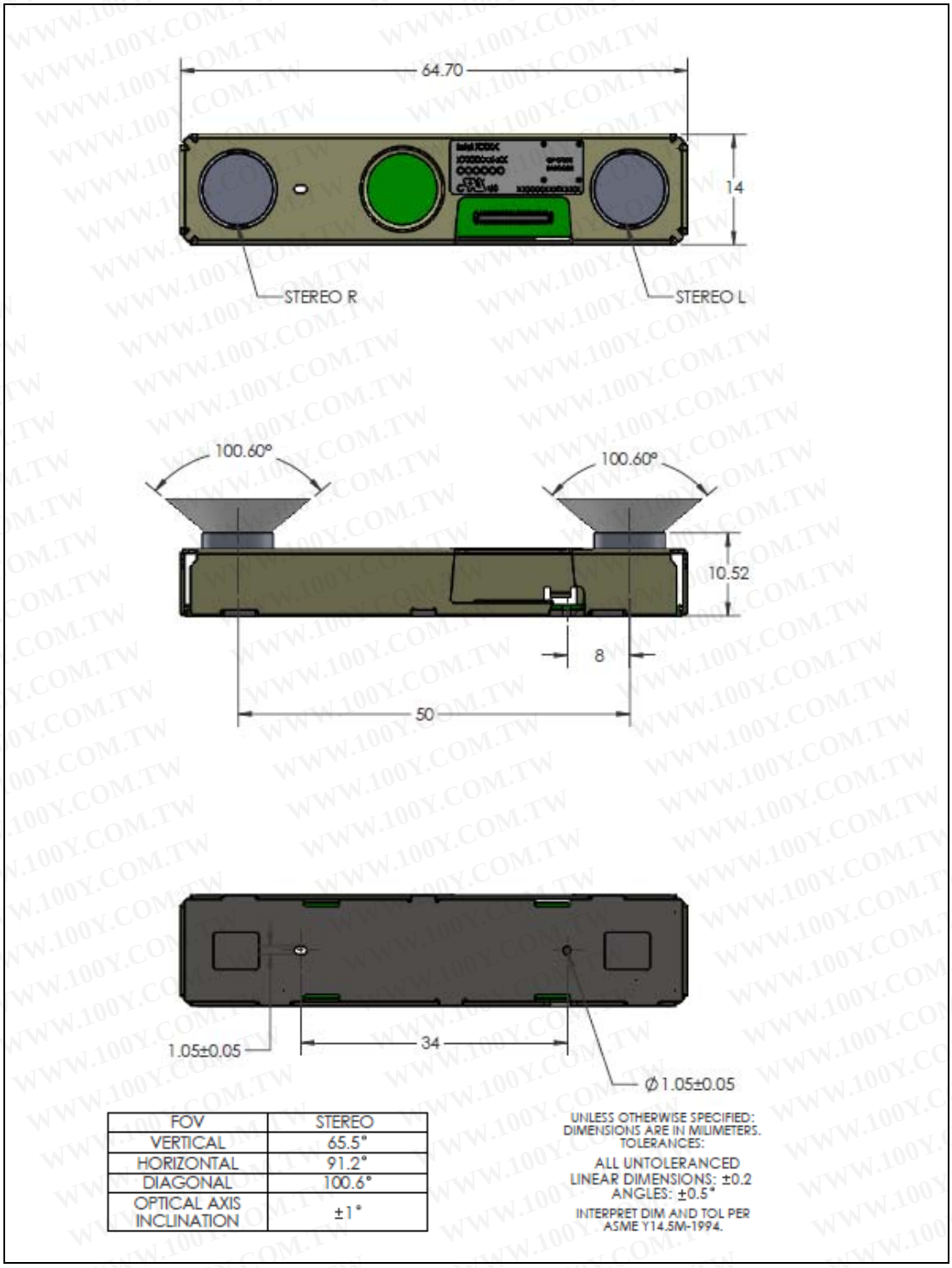

FOV	STEREO
VERTICAL	65.5°
HORIZONTAL	91.2°
DIAGONAL	100.6°
OPTICAL AXIS INCLINATION	±1°

Figure 10-5. Intel® **RealSense™ Depth Module D430**

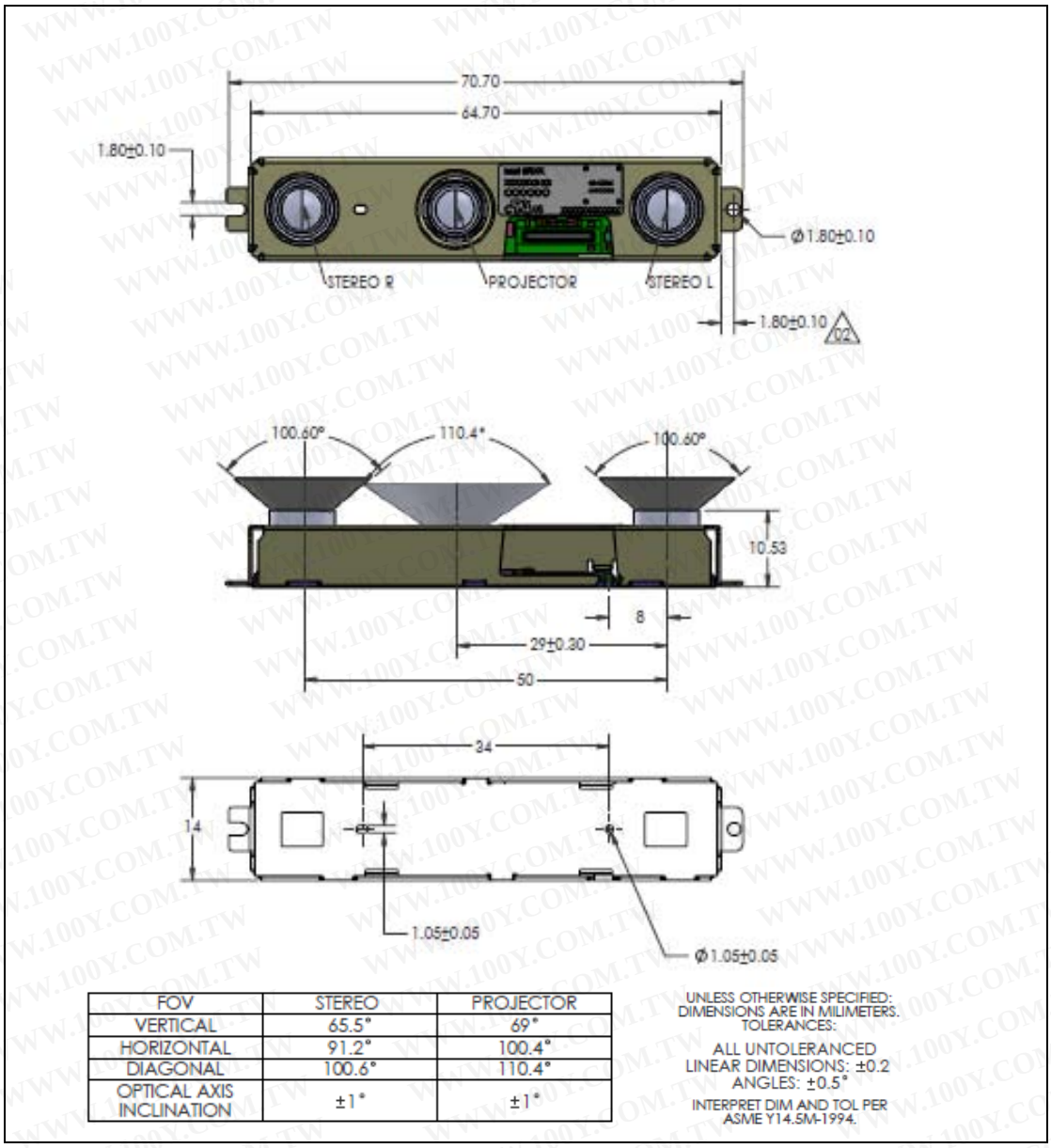

FOV	STEREO	PROJECTOR
VERTICAL	65.5°	69°
HORIZONTAL	91.2°	100.4°
DIAGONAL	100.6°	110.4°
OPTICAL AXIS INCLINATION	±1°	±1°

Figure 10-6. Vision Processor D4 Board USB Type-C (Intel® **RealSense™ Vision** Processor D4 Board)

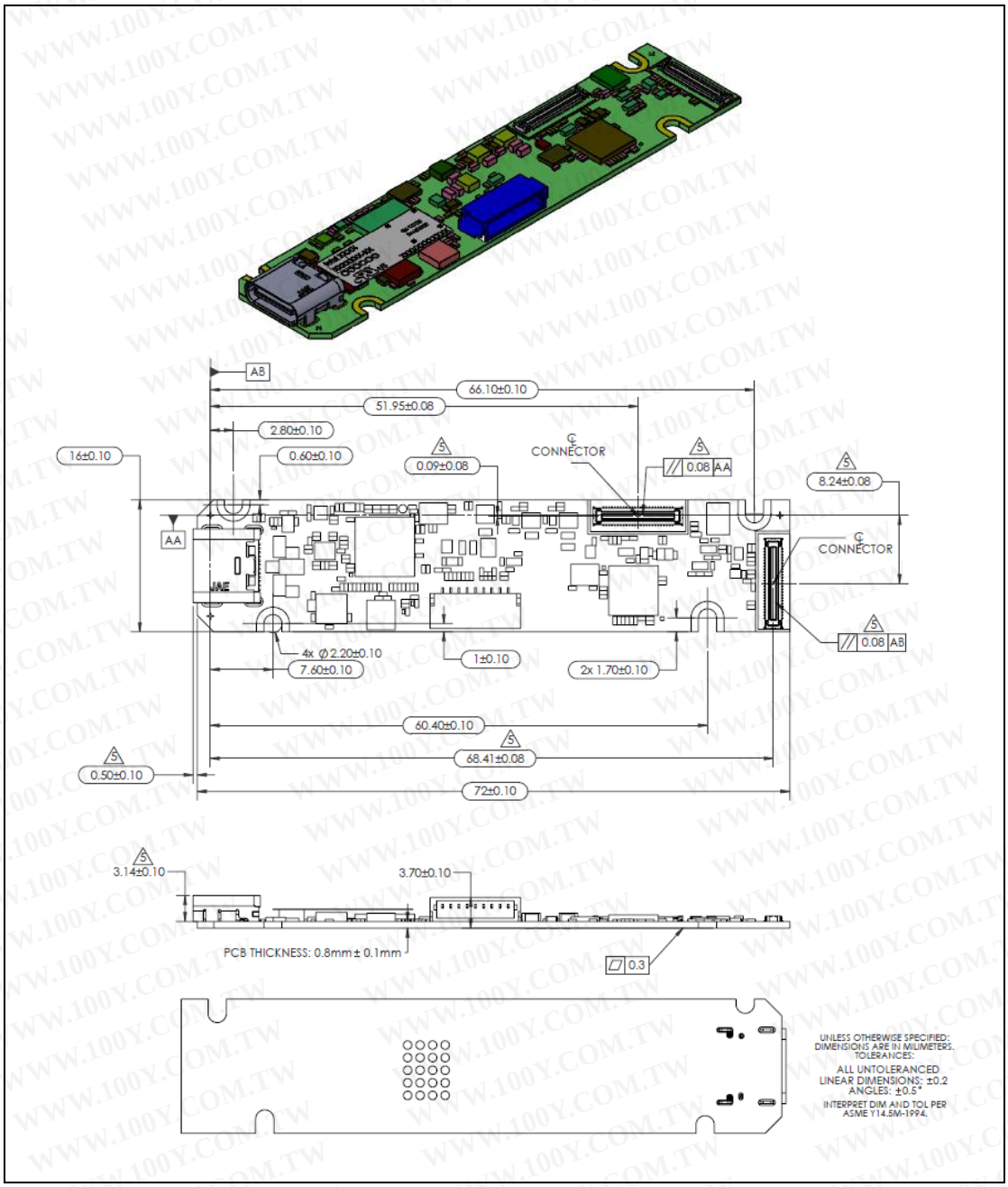

Figure 10-7. Intel® **RealSense™ Depth Camera D415**

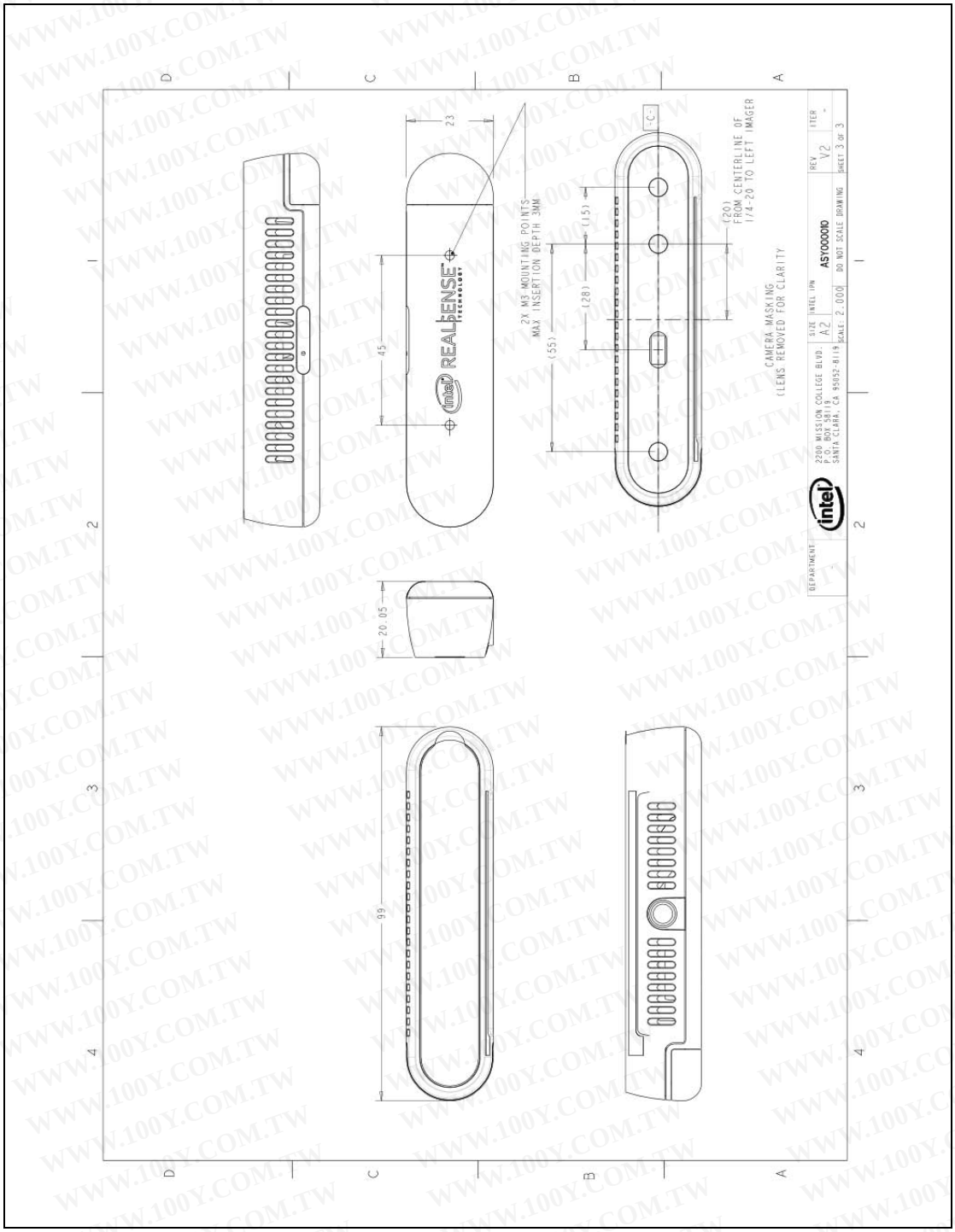

Figure 10-8. Intel® **RealSense™ Depth Camera D435**

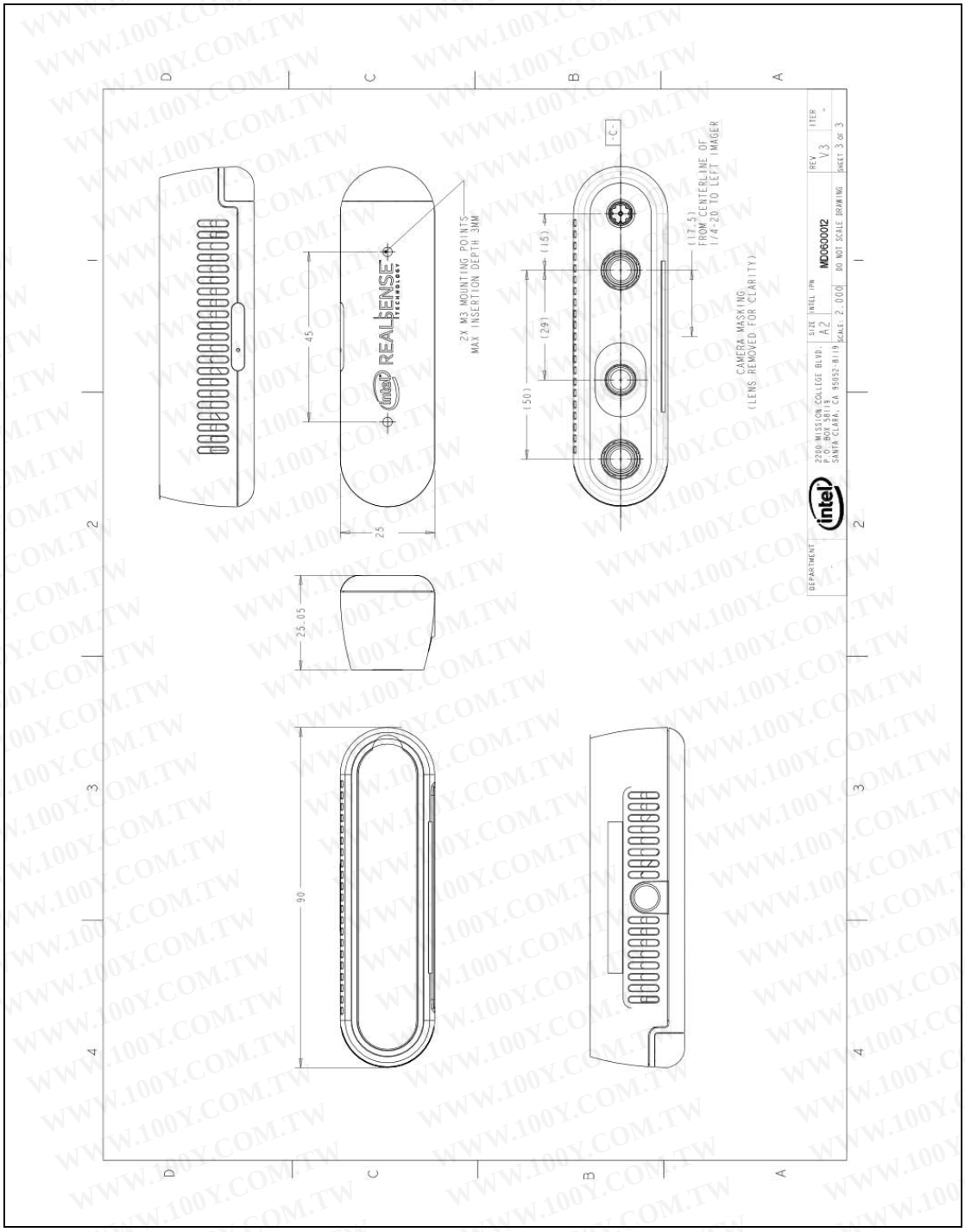

§§

11 Connector Drawings

Figure 11-1. Receptacle Mechanical Drawing (50 Pin Depth Module Receptacle)

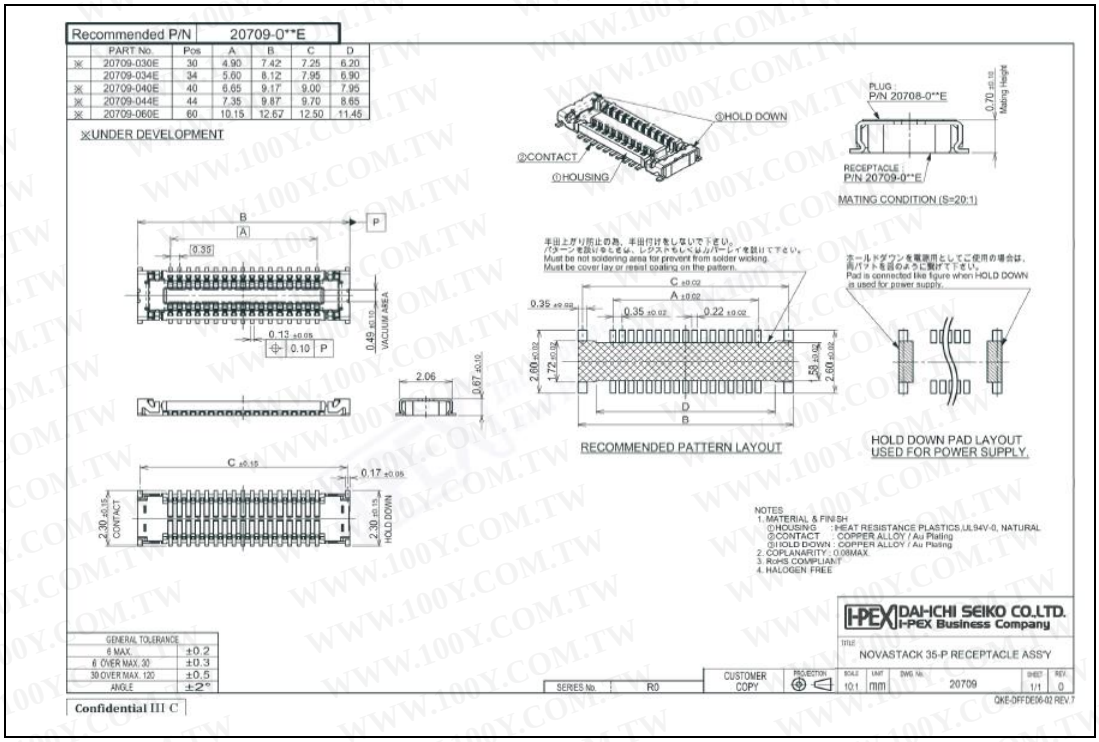

Figure 11-2. Plug Mechanical Drawing (50 pin Depth Module Plug)

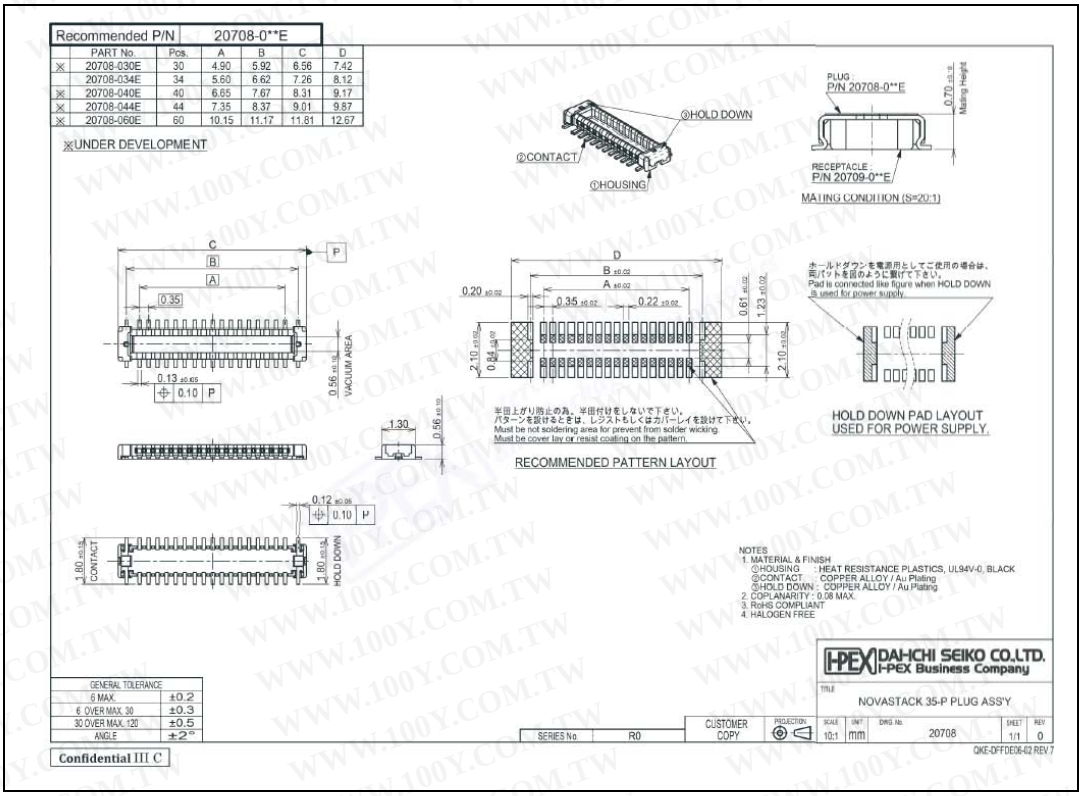

§ §

12 Appendix A – Vision Processor D4 on Motherboard Schematic Checklist

The following checklist should be compared to the D4 on motherboard design.

Table 12-1. Vision Processor D4 on Motherboard Schematic Checklist

Note: Vision Processor D4 Ball Out and Signal Listing lists additional interfaces and signal pins that are not supported in current D4 camera system. These pins are called out as RESERVED

Stuff - Component is populated

No Stuff – Component is not populated

Signal Name	Pad	Connection	√
HOST MIPI			
H_DATAP0	B04	No Connect	
H_DATAN0	A05	No Connect	
H_DATAP1	B05	No Connect	
H_DATAN1	A06	No Connect	
H_DATAP2	B07	No Connect	
H_DATAN2	A08	No Connect	
H_DATAP3	B08	No Connect	
H_DATAN3	A09	No Connect	
H_CLKP	B06	No Connect	
H_CLKN	A07	No Connect	
H_SDA	B03	No Connect	
H_SCL	A04	No Connect	
H_REXT	C05	6.04K 1% resistor pull down to GND. (This resistor should be placed as close to ASIC as possible)	
IMAGER A MIPI (Stereo Depth Left Imager Interface)			
A_DATAP0	P03	Routed to Stereo Depth Receptacle Pin 16	
A_DATAN0	R02	Routed to Stereo Depth Receptacle Pin 18	
A_DATAP1	P05	Routed to Stereo Depth Receptacle Pin 28	

Signal Name	Pad	Connection	√
A_DATAN1	R04	Routed to Stereo Depth Receptacle Pin 30	
A_CLKP	P04	Routed to Stereo Depth Receptacle Pin 22	
A_CKLN	R03	Routed to Stereo Depth Receptacle Pin 24	
A_SDA	N01	Routed to Stereo Depth Receptacle Pin 41 with 2.2K pull up to 1.8V	
A_SCL	N02	Routed to Stereo Depth Receptacle Pin 39 with 2.2K pull up to 1.8V	
A_RCLK	P02	Routed to Stereo Depth Receptacle Pin 27	
A_PDOWN	N03	No Connect	
A_VSYNC	M01	Routed to Stereo Depth Receptacle Pin 23	
A_RESETN	P01	Routed to Stereo Depth Receptacle Pin 31	
A_REXT	N04	6.04K 1% resistor pull down to GND. (This resistor should be placed as close to ASIC as possible)	
IMAGER B MIPI (Reserved)			
B_DATAP0	B11	No Connect	
B_DATAN0	A12	No Connect	
B_DATAP1	B09	No Connect	
B_DATAN1	A10	No Connect	
B_CLKP	B10	No Connect	
B_CKLN	A11	No Connect	
B_SDA	C12	No Connect	
B_SCL	B12	No Connect	
B_RCLK	C07	No Connect	
B_PDOWN	C09	No Connect	
B_VSYNC	C08	No Connect	
B_RESETN	C10	No Connect	
B_REXT	C11	6.04K 1% resistor pull down to GND. (This resistor should be placed as close to ASIC as possible)	
IMAGER M MIPI (Stereo Depth Right Imager)			
M_DATAP0	P08	Routed to Stereo Depth Receptacle Pin 34	

Signal Name	Pad	Connection	√
M_DATAN0	R07	Routed to Stereo Depth Receptacle Pin 36	
M_DATAP1	P10	Routed to Stereo Depth Receptacle Pin 46	
M_DATAN1	R09	Routed to Stereo Depth Connector Pin 48	
M_CLKP	P09	Routed to Stereo Depth Receptacle Pin 40	
M_CKLN	R08	Routed to Stereo Depth Receptacle Pin 42	
M_SDA	P06	Routed to External Sensor Sync Connector Pin 6 through 2.2K pull up to 1.8V	
M_SCL	R05	Routed to External Sensor Sync Connector Pin 7 through 2.2K pull up to 1.8V	
M_RCLK	R06	Routed to Stereo Depth Receptacle Pin 37	
M_PDOWN	P07	No Connect	
M_VSYNC	N06	No Connect	
M_RESETN	N07	No Connect	
M_REXT	M06	6.04K 1% resistor pull down to GND. (This resistor should be placed as close to ASIC as possible)	
IMAGER Y MIPI (Color ISP)			
Y_DATAP0	C14	Routed to Color ISP (Intel®Vision Processor D4 Board) or No Connect	
Y_DATAN0	B15	Routed to Color ISP (Intel®Vision Processor D4 Board) or No Connect	
Y_DATAP1	B13	Routed to Color ISP (Intel®Vision Processor D4 Board) or No Connect	
Y_DATAN1	A13	Routed to Color ISP (Intel®Vision Processor D4 Board) or No Connect	
Y_CLKP	B14	Routed to Color ISP (Intel®Vision Processor D4 Board) or No Connect	
Y_CKLN	A14	Routed to Color ISP (Intel®Vision Processor D4 Board) or No Connect	
Y_SDA	E14	Routed to Color ISP (Intel®Vision Processor D4 Board) or No Connect	
Y_SCL	D15	Routed to Color ISP (Intel®Vision Processor D4 Board) or No Connect	
Y_RCLK	D14	Routed to Color ISP (Intel®Vision Processor D4 Board) or No Connect	
Y_PDOWN	E13	No Connect	

Signal Name	Pad	Connection	√
Y_VSYNC	F13	Routed as RGB_FSYNC to Stereo Depth Receptacle Pin 7 through 0 ohm stuff resistor. Alternately also as routed as RGB_STROBE to Stereo Depth Receptacle Pin 9 through 0 ohm no stuff resistor.	
Y_RESETN	F14	Routed to Color ISP (Intel®Vision Processor D4 Board) or No Connect	
Y_REXT	C15	6.04K 1% resistor pull down to GND. (This resistor should be placed as close to ASIC as possible)	
IMAGER Z MIPI (Reserved)			
Z_DATAP0	P13	No Connect	
Z_DATAN0	R12	No Connect	
Z_DATAP1	P11	No Connect	
Z_DATAN1	R10	No Connect	
Z_CLKP	P12	No Connect	
Z_CKLN	R11	No Connect	
Z_SDA	N13	No Connect	
Z_SCL	N12	No Connect	
Z_RCLK	R13	No Connect	
Z_PDOWN	N11	No Connect	
Z_VSYNC	R14	Depth VSYNC - Routed to External Sensor Sync Connector Pin 5	
Z_RESETN	P14	No Connect	
Z_REXT	N10	6.04K 1% resistor pull down to GND. (This resistor should be placed as close to ASIC as possible)	
SPI (SERIAL FLASH MEMORY)			
SPI_DI	N14	Routed to 16Mbit SERIAL FLASH MEMORY (IS25WP016 pin 5 or equivalent)	
SPI_DO	N15	Routed to 16Mbit SERIAL FLASH MEMORY (IS25WP016 pin 2 or equivalent)	
SPI_CLK	M14	Routed to 16Mbit SERIAL FLASH MEMORY (IS25WP016 pin 6 or equivalent)	
SPI_CS	M13	Routed to 16Mbit SERIAL FLASH MEMORY (IS25WP016 pin 1 or equivalent)	
SPI_WP	M15	Routed to 16Mbit SERIAL FLASH MEMORY (IS25WP016 pin 3 or equivalent	
GPIO			

Signal Name	Pad	Connection	√
GPIO[0]	E15	No Connect if not used.	
GPIO[1]	F15	No Connect if not used.	
GPIO[2]	G14	LASER_PWM - Routed to Stereo Depth Receptacle pin 43 with 0 ohm no stuff resistor. Refer to LASER_PWM platform implementation schematic in Figure 10-1. Laser PWM0 is routed to Stereo Depth Receptacle Pin 43 through 0 ohm stuff resistor. Laser PWM1 is routed to Stereo Depth Receptacle Pin 47	
GPIO[3]	H14	GVSYNC0 - Routed to External Sensor Sync Connector Pin 1	
GPIO[4]	G13	GVSYNC1 - Routed to External Sensor Sync Connector pin 2 through 0 ohm stuff resistor with optional LASER_PWRDN through 0 ohm no stuff resistor or No Connect if not used.	
GPIO[5]	G15	GVSYNC2 - Routed to External Sensor Sync Connector pin 3 through 0 ohm stuff resistor with optional FLAGB through 0 ohm no stuff resistor or No Connect if not used.	
GPIO[6]	H15	GVSYNC3 - Routed to External Sensor Sync Connector pin 4 through 0 ohm stuff resistor with optional LASER_PWM through 0 ohm no stuff resistor or No Connect if not used.	
GPIO[7]	H13	Routed to Stereo Depth Receptacle Pin 21 or No Connect if not used.	
EGPIO[0]	L01	FLAGB - Routed to Stereo Depth Connector Receptacle Pin 49 with pull up option to 1.8V with 0 ohm no stuff resistor	
EGPIO[1]	E03	Pull up option to 1.8V with 0 ohm no stuff resistor	
EGPIO[2]	K01	Pull up option to 1.8V with 0 ohm no stuff resistor	
EGPIO[3]	L02	LASER_PWRDN - Routed to Stereo Depth Connector Receptacle Pin 45 with pull up option to 1.8V with 0 ohm no stuff resistor	
EGPIO[4]	M02	Pull up to 1.8V with 4.99K resistor	
EGPIO[5]	J02	Pull down option to GND with 0 Ohms no stuff resistor	
EGPIO[6]	D01	Pull up option to 1.8V with 0 ohm no stuff resistor	
EGPIO[7]	E01	Pull down to GND with 4.99K resistor	
EGPIO[8]	F01	ISP_FCS – Color ISP EEPROM Chip Select. Also pulled up to 1.8V with 4.99K resistor	
EGPIO[9]	E02	Pull up option to 1.8V with 0 ohm no stuff resistor	

Signal Name	Pad	Connection	√
EGPIO[10]	J01	Pull up option to 1.8V with 4.99K no stuff resistor	
EGPIO[11]	F03	Pull up option to 1.8V with 4.99K no stuff resistor	
EGPIO[12]	K02	Pull up option to 1.8V with 4.99K no stuff resistor	
EGPIO[13]	F02	Pull up option to 1.8V with 0 ohm no stuff resistor	
USB			
USB_RXP	B02	Intel®Vision Processor D4 Board supports USB Type-C connection to Host USB. Route as appropriate connection to Host USB	
USB_RXN	A03	Intel®Vision Processor D4 Board supports USB Type-C connection to Host USB. Route as appropriate connection to Host USB.	
USB_TXP	B01	Intel®Vision Processor D4 Board supports USB Type-C connection to Host USB. Route as appropriate connection to Host USB.	
USB_TXN	A02	Intel®Vision Processor D4 Board supports USB Type-C connection to Host USB. Route as appropriate connection to Host USB.	
USB_DP	D03	Intel®Vision Processor D4 Board supports USB Type-C connection to Host USB. Route as appropriate connection to Host USB.	
USB_DN	D02	Intel®Vision Processor D4 Board supports USB Type-C connection to Host USB. Route as appropriate connection to Host USB.	
USB_ID	E05	Intel®Vision Processor D4 Board supports USB Type-C connection to Host USB. Route as appropriate connection to Host USB.	
USB_RESREF	E04	200 ohm pull down to GND. (This resistor should be placed as close to ASIC as possible)	
MISCELLANIOUS			
LD_ON_OUT_XX	K13	(RESERVED) No Connect	
MODSTROB	J15	(RESERVED) No Connect	
MODSIGN	J14	(RESERVED) No Connect	
LD_ERR	J13	Connected to FF_RSTn (schematic)	
CLKXI	G1	24MHz XTAL. Refer to platform implementation schematic in Figure 10-2.	
CLKXO	H1	24MHz XTAL. Refer to platform implementation schematic in Figure 10-2.	
PRSTN	C3	Platform implementation specific	
CW_CSR_PRSTN	P15	No Connect	
PMU_PWR_EN	K3	Enables VDD_PG voltage rail.	

Signal Name	Pad	Connection	√
DFU	C2	Platform implementation specific	
ISP_SCL	M10	(RESERVED) No Connect	
ISP_SDA	N9	(RESERVED) No Connect	
VQPSQ	L3	(RESERVED) No Connect	
VQPSM	M3	(RESERVED) No Connect	
REFPADCLKP	D6	(RESERVED) No Connect	
REFPADCLKM	E6	(RESERVED) No Connect	
JTAG			
TDI	L13	Routed to Test Point or pulldown resistor of 4.7-10KOhm if JTAG is not used.	
TDO	L14	Routed to Test Point	
TCLK	K14	Routed to Test Point or pulldown resistor of 4.7-10KOhm if JTAG is not used.	
TMS	K15	Routed to Test Point or pulldown resistor of 4.7-10KOhm if JTAG is not used.	
TRSTN	L15	Routed to Test Point	
POWER AND GROUND			
VDD		0.9V	
VDD_PG		0.9V	
USB_DVDD		0.9V	
VPTX0		0.9V	
VP		0.9V	
*_AVDD		1.8V	
VDDPLL		0.9V	
VDDTS		1.8V	
VDDPST18		1.8V	
USB_VDD330		3.3V	
VBUS0		VBUS Power Monitor Signal. VBUS0 signal level is at VBUS*(200k/(200k+30k)) using external voltage divider	
VSS		Ground	
*_AGND		Ground	

Figure 12-1. Vision Processor D4 Laser PWM Reference Platform Schematic

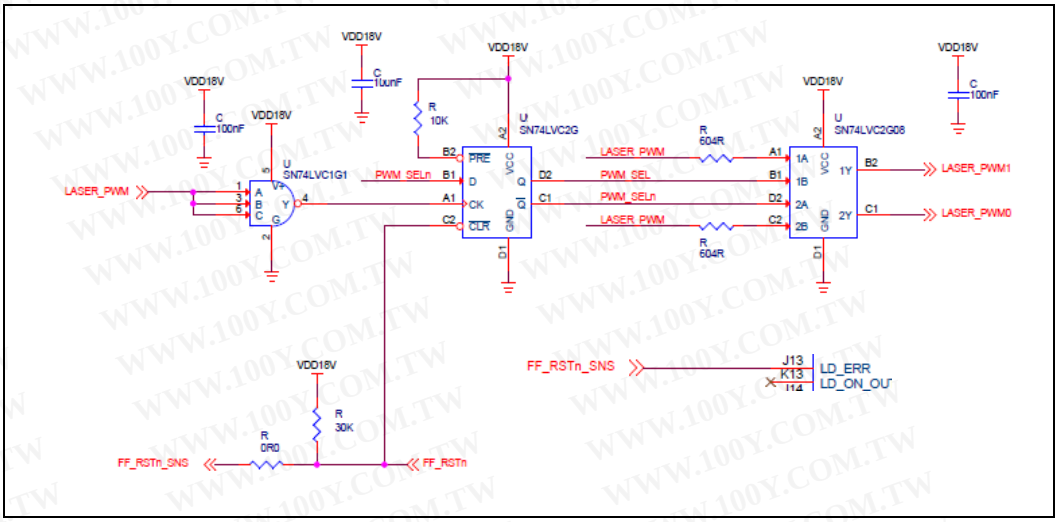

Figure 12-2. Vision Processor D4 24MHz Crystal Clock Reference Platform Schematic

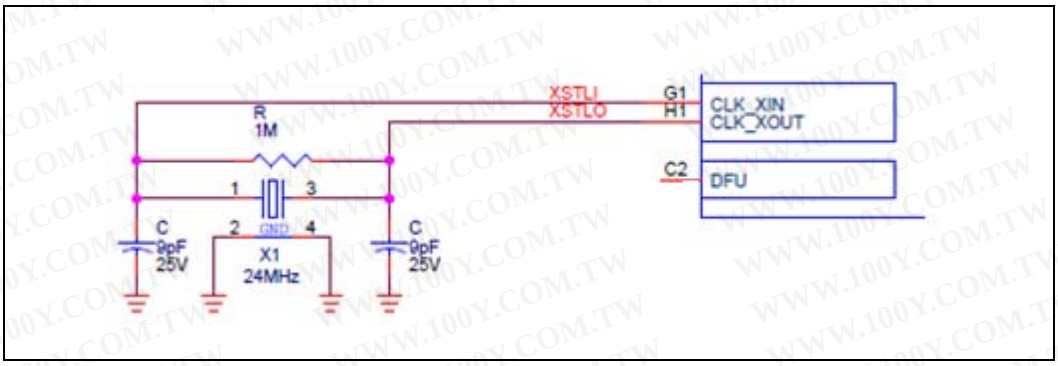

12.1 Power Delivery

The DC–DC power circuity discussed in this section must be followed for Vision Processor D4 on Motherboard designs. TPS62085R DC-DC converter (www.ti.com) generates 0.9V and SC21150 (www.semtech.com) generates 1.8V and 3.3V voltage rails from 5V to power Vision Processor D4, Stereo Depth Module.

Figure 12-3. DC-DC Reference Platform Schematic (3.3V, 1.8V, 0.9V)

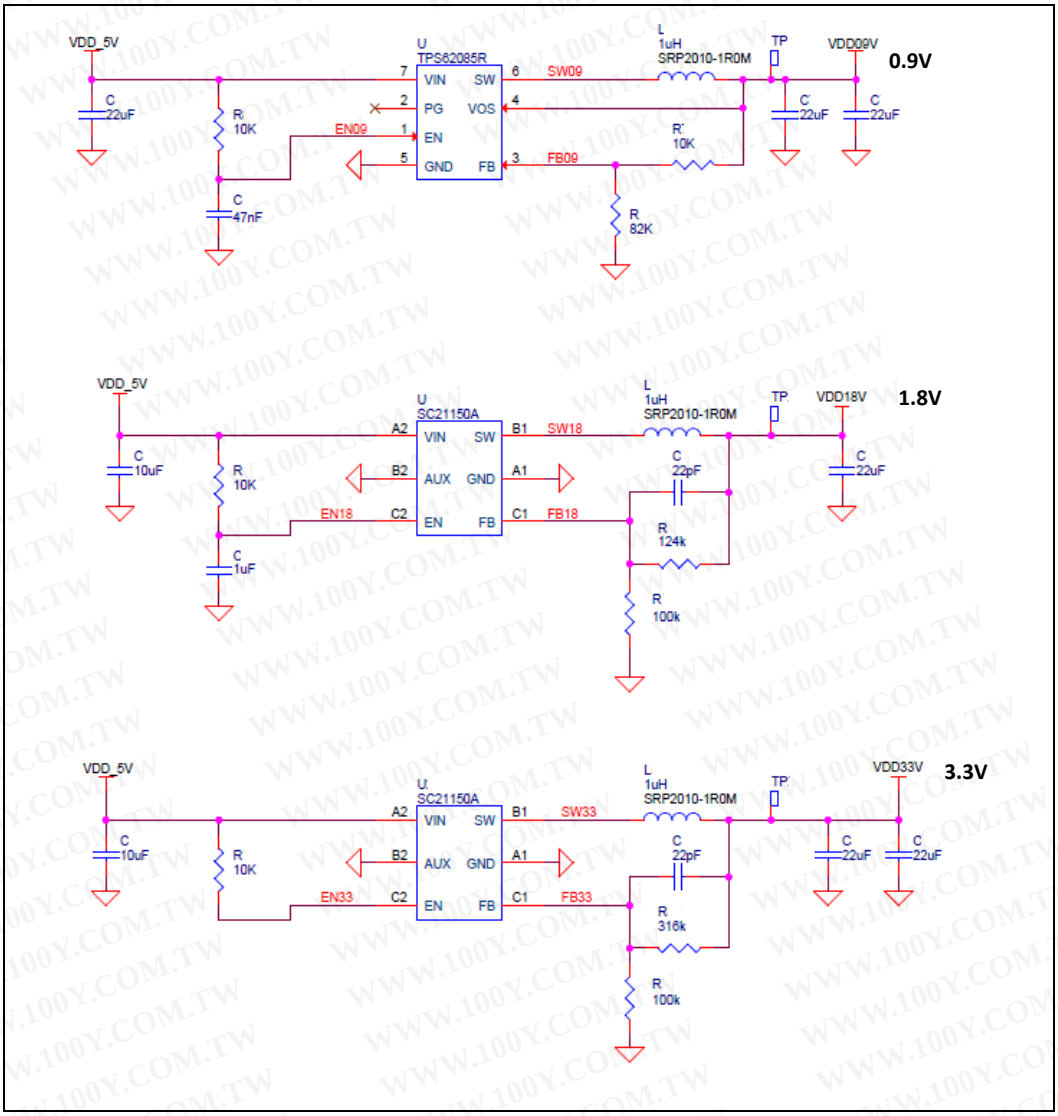

Figure 12-4. Vision Processor D4 VDD_PG and AVDD Reference Platform Schematic

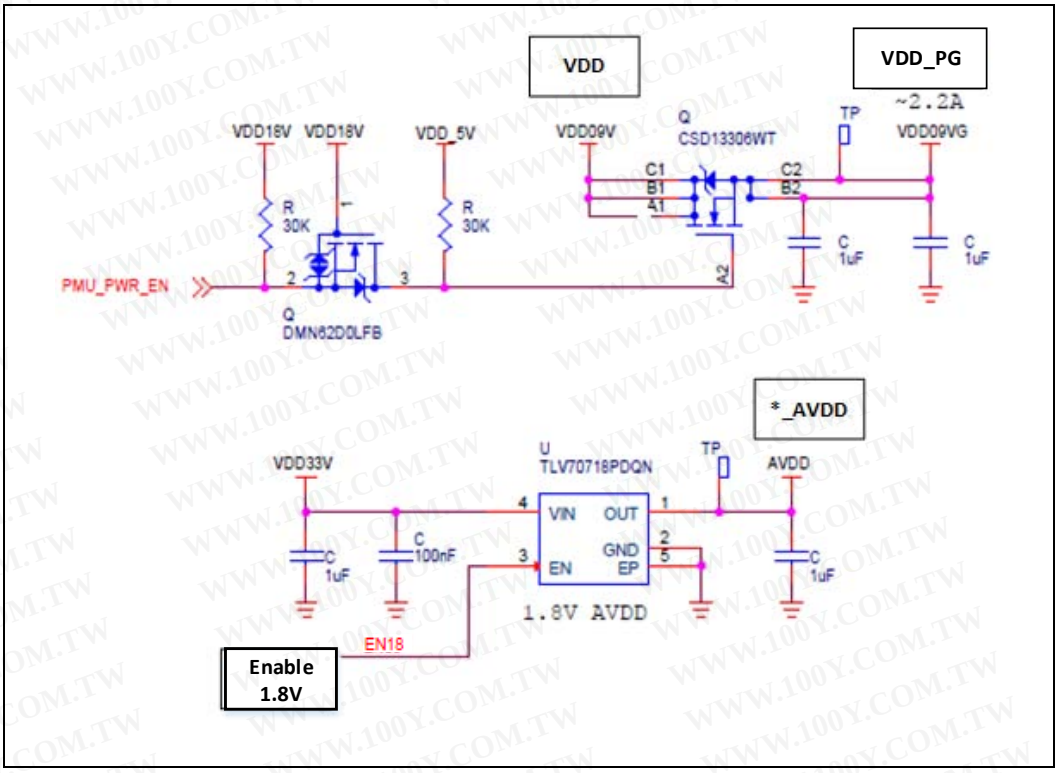

Table 12-2. Vision Processor D4 Decoupling and Filter Requirements

Voltage Ball Name	Decoupling	Filter	Notes
VDD	4X 100nF		
VDD_PG	8X 100nF		
USB_DVDD	2X 100nF	1X 100nF 1X FERRITE BEAD 120 OHM	
VPTX0			
VP			
*AVDD	1X 100nF		
VDDPLL	1X 100nF	1X 100nF 1X FERRITE BEAD 120 OHM	
VDDTS	1X 100nF		
VDDPST18 (Left and Right)	1X 100nF		
USB_VDD330	1X 100nF		
VBUS0			

13 Appendix B- Cover Material

Cover materials placed over the camera sensor must be carefully selected to avoid impacting software performance. The following parameters are an example of a suitable cover material. Other solutions are also acceptable but careful design and validation work should be done to verify a solution will perform adequately.

Table 13-1. Example: Cover Material Parameters

Specification	Recommendation	Notes
Hardness	6H	Prevent Scratches
Flatness	0.005mm	Minimize Distortion
Distance From Lens to Cover	Less than 8mm (D410/D415) Less than 2mm (D430)	Cover Material thickness of 1mm
Thickness of Cover	0.55mm ± 0.03mm	
Coatings	AR inside and outside	Avoid Reflections
Transmission Wavelength Range	400 to 865 (Visible and Infrared) @ 98% transmission rate or higher at all viewing and transmitting angles	
Cover Tilt Tolerance	± 1.0°	

§§

勝 特 力 材 料 886-3-5753170
胜特力电子(上海) 86-21-34970699
胜特力电子(深圳) 86-755-83298787
Http://www.100y.com.tw