勝 特 力 材 料 886-3-5753170
胜特力电子(上海) 86-21-54151736
胜特力电子(深圳) 86-755-83298787
Http://www.100y.com.tw

PD-2.308 rev. A 12/97

International
IOR Rectifier

40CPQ050
40CPQ060

SCHOTTKY RECTIFIER 40 Amp

Major Ratings and Characteristics

Characteristics		40CPQ...	Units
$I_{F(AV)}$	Rectangular waveform	40	A
V_{RRM}		50/60	V
I_{FSM}	@ tp = 5 µs sine	3200	A
V_F	@ 20 Apk, T_J=125°C (per leg)	0.49	V
T_J		-55 to 150	°C

Description/Features

The 40CPQ... center tap Schottky rectifier has been optimized for very low forward voltage drop, with moderate leakage. The proprietary barrier technology allows for reliable operation up to 150° C junction temperature. Typical applications are in switching power supplies, converters, free-wheeling diodes, and reverse battery protection.

- 150° C T_J operation
- Center tap TO-247 package
- High purity, high temperature epoxy encapsulation for enhanced mechanical strength and moisture resistance
- Very low forward voltage drop
- High frequency operation
- Guard ring for enhanced ruggedness and long term reliability

CASE STYLE AND DIMENSIONS

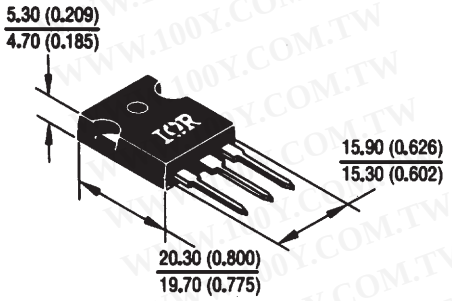

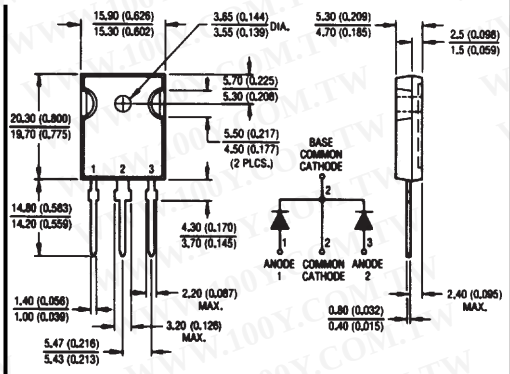

Conforms to JEDEC Outline TO-247AC (TO-3P)

Dimensions in millimeters and inches

勝 特 力 材 料 886-3-5753170
胜特力电子(上海) 86-21-54151736
胜特力电子(深圳) 86-755-83298787
Http://www.100y.com.tw

Voltage Ratings

	Part number	40CPQ050	40CPQ060
V_R	Max. DC Reverse Voltage (V)	50	60
V_{RWM}	Max. Working Peak Reverse Voltage (V)		

Absolute Maximum Ratings

	Parameters	40CPQ...	Units	Conditions	
$I_{F(AV)}$	Max. Average Forward Current * See Fig. 5	40	A	50% duty cycle @ T_C = 120 °C, rectangular wave form	
I_{FSM}	Max. Peak One Cycle Non-Repetitive Surge Current (Per Leg) * See Fig. 7	3200	A	5µs Sine or 3µs Rect. pulse	Following any rated load condition and with rated V_{RRM} applied
		320		10ms Sine or 6ms Rect. pulse	
E_{AS}	Non-Repetitive Avalanche Energy (Per Leg)	18	mJ	T_J = 25 °C, I_{AS} = 2 Amps, L = 9.0 mH	
I_{AR}	Repetitive Avalanche Current (Per Leg)	2	A	Current decaying linearly to zero in 1 µsec Frequency limited by T_J max. $V_A = 1.5 \times V_R$ typical	

Electrical Specifications

	Parameters	40CPQ...	Units	Conditions	
V_{FM}	Max. Forward Voltage Drop (Per Leg) * See Fig. 1 (1)	0.53	V	@ 20A	T_J = 25 °C
		0.68	V	@ 40A	
		0.49	V	@ 20A	T_J = 125 °C
		0.64	V	@ 40A	
I_{RM}	Max. Reverse Leakage Current (Per Leg) * See Fig. 2 (1)	1.7	mA	T_J = 25 °C	V_R = rated V_R
		96	mA	T_J = 125 °C	
C_T	Max. Junction Capacitance (Per Leg)	1600	pF	$V_R = 5V_{DC}$, (test signal range 100Khz to 1Mhz) 25°C	
L_S	Typical Series Inductance (Per Leg)	7.5	nH	Measured lead to lead 5mm from package body	
dv/dt	Max. Voltage Rate of Change (Rated V_R)	10,000	V/ µs		

(1) Pulse Width < 300µs, Duty Cycle <2%

Thermal-Mechanical Specifications

	Parameters		40CPQ...	Units	Conditions
T_J	Max. Junction Temperature Range		-55 to 150	°C	
T_{stg}	Max. Storage Temperature Range		-55 to 150	°C	
R_{thJC}	Max. Thermal Resistance Junction to Case (Per Leg)		1.25	°C/W	DC operation * See Fig. 4
R_{thJC}	Max. Thermal Resistance Junction to Case (Per Package)		0.63	°C/W	DC operation
R_{thCS}	Typical Thermal Resistance, Case to Heatsink		0.24	°C/W	Mounting surface, smooth and greased
wt	Approximate Weight		6 (0.21)	g (oz.)	
T	Mounting Torque	Min.	6 (5)	Kg-cm (lbf-in)	Non-lubricated threads
		Max.	12 (10)		
	Case Style		TO-247AC (TO-3P)		JEDEC

勝 特 力 材 料 886-3-5753170
胜特力电子(上海) 86-21-54151736
胜特力电子(深圳) 86-755-83298787
Http://www.100y.com.tw

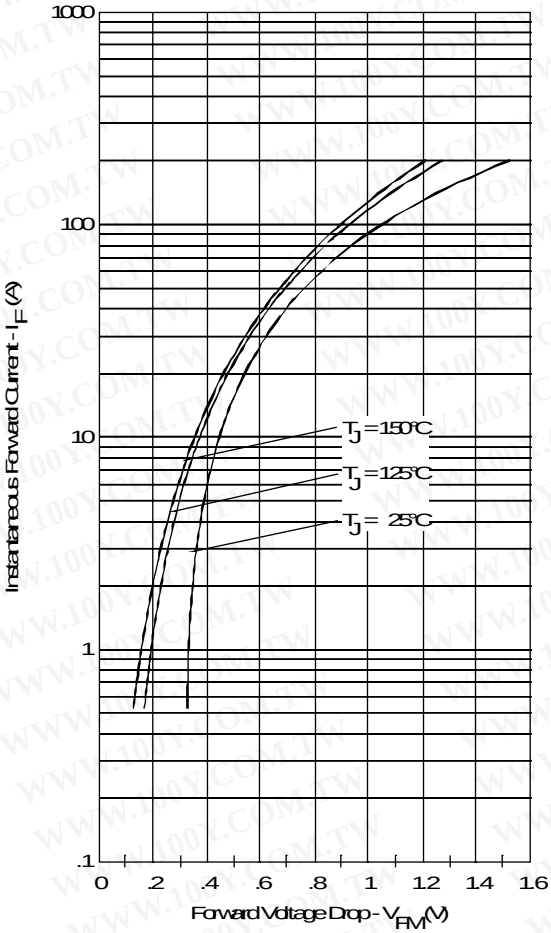

Fig. 1 - Max. Forward Voltage Drop Characteristics (Per Leg)

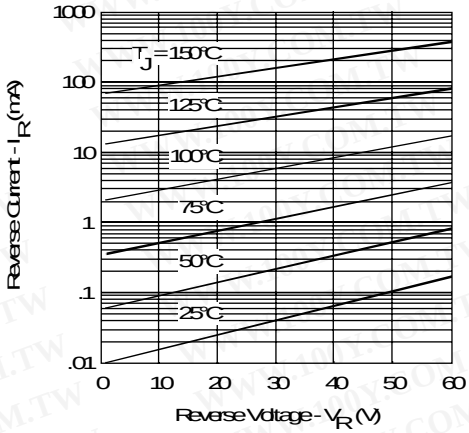

Fig. 2 - Typical Values Of Reverse Current Vs. Reverse Voltage (Per Leg)

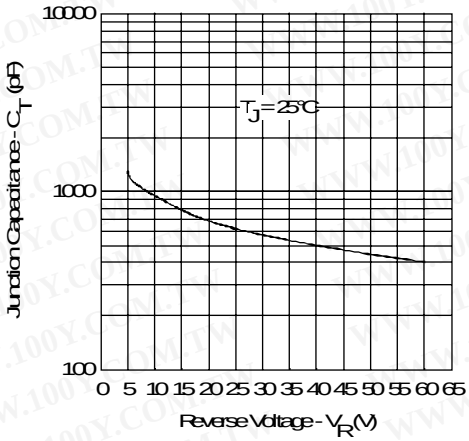

Fig. 3 - Typical Junction Capacitance Vs. Reverse Voltage (Per Leg)

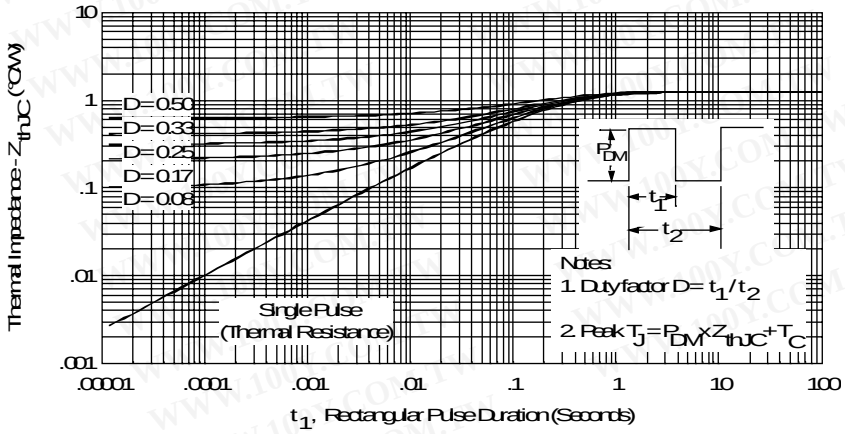

Fig. 4 - Max. Thermal Impedance Z_{thJC} Characteristics (Per Leg)

勝 特 力 材 料 886-3-5753170
胜特力电子(上海) 86-21-54151736
胜特力电子(深圳) 86-755-83298787
Http://www.100y.com.tw

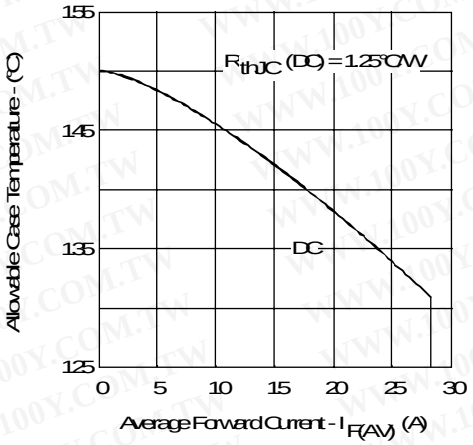

Fig. 5 - Max. Allowable Case Temperature Vs. Average Forward Current (Per Leg)

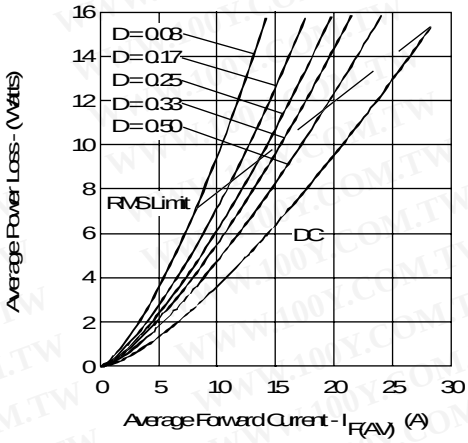

Fig. 6 - Forward Power Loss Characteristics (Per Leg)

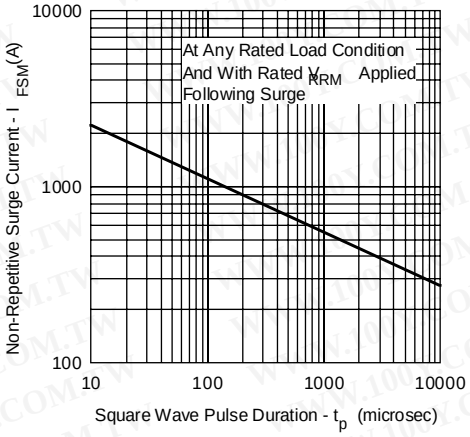

Fig. 7 - Max. Non-Repetitive Surge Current (Per Leg)

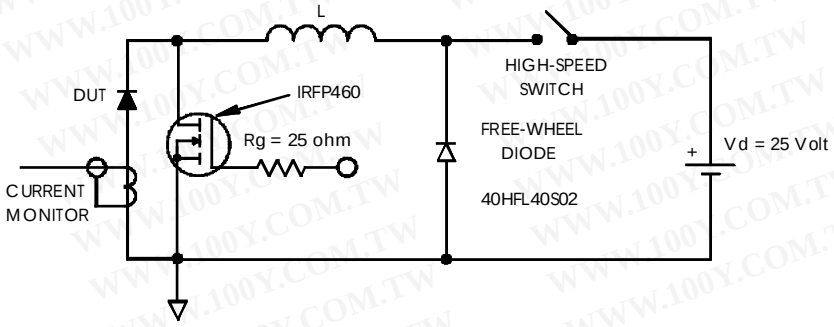

Fig. 8 - Unclamped Inductive Test Circuit