勝 特 力 材 料 886-3-5753170
胜特力电子(上海) 86-21-54151736
胜特力电子(深圳) 86-755-83298787
Http://www.100y.com.tw

MICROCHIP

25AA040A/25LC040A

4K SPI Bus Serial EEPROM

Device Selection Table

Part Number	Vcc Range	Page Size	Temp. Ranges	Packages
25AA040A	1.8-5.5V	16 Bytes	I	P, MS, SN, ST, MC, OT
25LC040A	2.5-5.5V	16 Bytes	I, E	P, MS, SN, ST, MC, OT

Features:

- Max. Clock 10 MHz
- Low-Power CMOS Technology:
  - Max. Write Current: 5 mA at 5.5V, 10 MHz
  - Read Current: 5 mA at 5.5V, 10 MHz
  - Standby Current: 5 µA at 5.5V
- 512 x 8-Bit Organization
- Write Page mode (up to 16 bytes)
- Sequential Read
- Self-timed Erase and Write Cycles (5 ms max.)
- Block Write Protection:
  - Protect none, 1/4, 1/2 or all of array
- Built-in Write Protection:
  - Power-on/off data protection circuitry
  - Write enable latch
  - Write-protect pin
- High Reliability:
  - Endurance: 1,000,000 Erase/Write cycles
  - Data retention: >200 years
  - ESD protection: >4000V
- Temperature Ranges Supported:
  - Industrial (I): -40°C to +85°C
  - Automotive (E): -40°C to +125°C
- Pb-Free and RoHS Compliant

Pin Function Table

Name	Function
$\overline{CS}$	Chip Select Input
SO	Serial Data Output
$\overline{WP}$	Write-Protect
Vss	Ground
SI	Serial Data Input
SCK	Serial Clock Input
$\overline{HOLD}$	Hold Input
Vcc	Supply Voltage

Description:

The Microchip Technology Inc. 25XX040A* is a 4 Kbit Serial Electrically Erasable Programmable Read-Only Memory (EEPROM). The memory is accessed via a simple Serial Peripheral Interface (SPI) compatible serial bus. The bus signals required are a clock input (SCK) plus separate data in (SI) and data out (SO) lines. Access to the device is controlled through a Chip Select ($\overline{CS}$) input.

Communication to the device can be paused via the hold pin ($\overline{HOLD}$). While the device is paused, transitions on its inputs will be ignored, with the exception of Chip Select, allowing the host to service higher priority interrupts.

The 25XX040A is available in standard packages including 8-lead PDIP and SOIC, and advanced packages including 8-lead MSOP, 8-lead TSSOP and rotated TSSOP, 8-lead 2x3 DFN, and 6-lead SOT-23.

Package Types (not to scale)

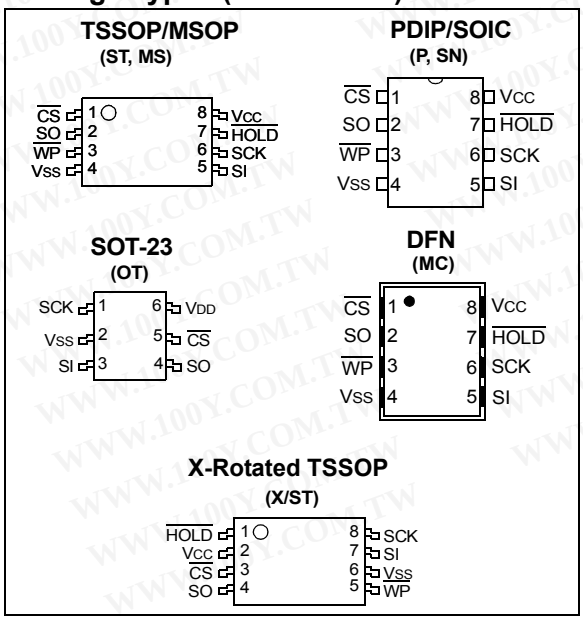

*25XX040A is used in this document as a generic part number for the 25AA040A and the 25LC040A.

勝 特 力 材 料 886-3-5753170
胜特力电子(上海) 86-21-54151736
胜特力电子(深圳) 86-755-83298787
Http://www.100y.com.tw

1.0 ELECTRICAL CHARACTERISTICS

Absolute Maximum Ratings(†)

VCC 6.5V
All inputs and outputs w.r.t. VSS ..... -0.6V to VCC +1.0V
Storage temperature ..... -65°C to 150°C
Ambient temperature under bias ..... -40°C to 125°C
ESD protection on all pins ..... 4 kV

† NOTICE: Stresses above those listed under "Absolute Maximum Ratings" may cause permanent damage to the device. This is a stress rating only and functional operation of the device at those or any other conditions above those indicated in the operational listings of this specification is not implied. Exposure to maximum rating conditions for an extended period of time may affect device reliability.

TABLE 1-1: DC CHARACTERISTICS

DC CHARACTERISTICS			Industrial (I): TA = -40°C to +85°C VCC = 1.8V to 5.5V Automotive (E): TA = -40°C to +125°C VCC = 2.5V to 5.5V			
Param. No.	**Sym.**	**Characteristic**	**Min.**	**Max.**	**Units**	**Test Conditions**
D001	VIH1	High-level Input Voltage	0.7 VCC	VCC +1	V	
D002	VIL1	Low-level Input Voltage	-0.3	0.3 VCC	V	VCC ≥ 2.7V **(Note 1)**
D003	VIL2		-0.3	0.2 VCC	V	VCC < 2.7V **(Note 1)**
D004	VOL	Low-level Output Voltage	—	0.4	V	IOL = 2.1 mA
D005	VOL		—	0.2	V	IOL = 1.0 mA, VCC = 2.5V
D006	VOH	High-level Output Voltage	VCC -0.5	—	V	IOH = -400 µA
D007	ILI	Input Leakage Current	—	±1	µA	$\overline{CS}$ = VCC, VIN = VSS or VCC
D008	ILO	Output Leakage Current	—	±1	µA	$\overline{CS}$ = VCC, VOUT = VSS or VCC
D009	CINT	Internal Capacitance (all inputs and outputs)	—	7	pF	TA = 25°C, CLK = 1.0 MHz, VCC = 5.0V **(Note 1)**
D010	ICC Read	Operating Current	— —	5 2.5	mA mA	VCC = 5.5V; FCLK = 10.0 MHz; SO = Open VCC = 2.5V; FCLK = 5.0 MHz; SO = Open
D011	ICC Write		— —	5 3	mA mA	VCC = 5.5V VCC = 2.5V
D012	ICCS	Standby Current	— —	5 1	µA µA	$\overline{CS}$ = VCC = 5.5V, Inputs tied to VCC or VSS, TA = +125°C $\overline{CS}$ = VCC = 2.5V, Inputs tied to VCC or VSS, TA = +85°C

Note 1: This parameter is periodically sampled and not 100% tested.

© 2007 Microchip Technology Inc.

TABLE 1-2: AC CHARACTERISTICS

AC CHARACTERISTICS			Industrial (I): TA = -40°C to +85°C VCC = 1.8V to 5.5V Automotive (E): TA = -40°C to +125°C VCC = 2.5V to 5.5V			
Param. No.	**Sym.**	**Characteristic**	**Min.**	**Max.**	**Units**	**Test Conditions**
1	FCLK	Clock Frequency	— — —	10 5 3	MHz MHz MHz	4.5V ≤ VCC < 5.5V 2.5V ≤ VCC < 4.5V 1.8V ≤ VCC < 2.5V
2	TCSS	$\overline{CS}$ Setup Time	50 100 150	— — —	ns ns ns	4.5V ≤ VCC < 5.5V 2.5V ≤ VCC < 4.5V 1.8V ≤ VCC < 2.5V
3	TCSH	$\overline{CS}$ Hold Time	100 200 250	— — —	ns ns ns	4.5V ≤ VCC < 5.5V 2.5V ≤ VCC < 4.5V 1.8V ≤ VCC < 2.5V
4	TCSD	$\overline{CS}$ Disable Time	50	—	ns	—
5	Tsu	Data Setup Time	10 20 30	— — —	ns ns ns	4.5V ≤ VCC < 5.5V 2.5V ≤ VCC < 4.5V 1.8V ≤ VCC < 2.5V
6	THD	Data Hold Time	20 40 50	— — —	ns ns ns	4.5V ≤ VCC < 5.5V 2.5V ≤ VCC < 4.5V 1.8V ≤ VCC < 2.5V
7	TR	CLK Rise Time	—	100	ns	**(Note 1)**
8	TF	CLK Fall Time	—	100	ns	**(Note 1)**
9	THI	Clock High Time	50 100 150	— — —	ns ns ns	4.5V ≤ VCC < 5.5V 2.5V ≤ VCC < 4.5V 1.8V ≤ VCC < 2.5V
10	TLO	Clock Low Time	50 100 150	— — —	ns ns ns	4.5V ≤ VCC < 5.5V 2.5V ≤ VCC < 4.5V 1.8V ≤ VCC < 2.5V
11	TCLD	Clock Delay Time	50	—	ns	—
12	TCLE	Clock Enable Time	50	—	ns	—
13	TV	Output Valid from Clock Low	— — —	50 100 160	ns ns ns	4.5V ≤ VCC < 5.5V 2.5V ≤ VCC < 4.5V 1.8V ≤ VCC < 2.5V
14	THO	Output Hold Time	0	—	ns	**(Note 1)**
15	TDIS	Output Disable Time	— — —	40 80 160	ns ns ns	4.5V ≤ VCC < 5.5V **(Note 1)** 2.5V ≤ VCC < 4.5V **(Note 1)** 1.8V ≤ VCC < 2.5V **(Note 1)**
16	THS	$\overline{HOLD}$ Setup Time	20 40 80	— — —	ns ns ns	4.5V ≤ VCC < 5.5V 2.5V ≤ VCC < 4.5V 1.8V ≤ VCC < 2.5V

Note 1: This parameter is periodically sampled and not 100% tested.

2: This parameter is not tested but ensured by characterization. For endurance estimates in a specific application, please consult the Total Endurance™ Model which can be obtained from our web site: www.microchip.com.

3: TWC begins on the rising edge of $\overline{CS}$ after a valid write sequence and ends when the internal write cycle is complete.

TABLE 1-2: AC CHARACTERISTICS (CONTINUED)

AC CHARACTERISTICS			Industrial (I): TA = -40°C to +85°C VCC = 1.8V to 5.5V Automotive (E): TA = -40°C to +125°C VCC = 2.5V to 5.5V			
Param. No.	**Sym.**	**Characteristic**	**Min.**	**Max.**	**Units**	**Test Conditions**
17	THH	$\overline{\text{HOLD}}$ Hold Time	20 40 80	— — —	ns ns ns	4.5V ≤ VCC < 5.5V 2.5V ≤ VCC < 4.5V 1.8V ≤ VCC < 2.5V
18	THZ	$\overline{\text{HOLD}}$ Low to Output High-Z	30 60 160	— — —	ns ns ns	4.5V ≤ VCC < 5.5V **(Note 1)** 2.5V ≤ VCC < 4.5V **(Note 1)** 1.8V ≤ VCC < 2.5V **(Note 1)**
19	THV	$\overline{\text{HOLD}}$ High to Output Valid	30 60 160	— — —	ns ns ns	4.5V ≤ VCC < 5.5V 2.5V ≤ VCC < 4.5V 1.8V ≤ VCC < 2.5V
20	TWC	Internal Write Cycle Time (byte or page)	—	5	ms	**(NOTE 3)**
21	—	Endurance	1M	—	E/W Cycles	**(NOTE 2)**

Note 1: This parameter is periodically sampled and not 100% tested.

2: This parameter is not tested but ensured by characterization. For endurance estimates in a specific application, please consult the Total Endurance™ Model which can be obtained from our web site: www.microchip.com.

3: TWC begins on the rising edge of $\overline{\text{CS}}$ after a valid write sequence and ends when the internal write cycle is complete.

TABLE 1-3: AC TEST CONDITIONS

AC Waveform:	
VLO = 0.2V	—
VHI = VCC - 0.2V	**(Note 1)**
VHI = 4.0V	**(Note 2)**
CL = 100 pF	—
Timing Measurement Reference Level	
Input	0.5 VCC
Output	0.5 VCC

Note 1: For VCC ≤ 4.0V

2: For VCC ≥ 4.0V

勝 特 力 材 料 886-3-5753170
胜特力电子(上海) 86-21-54151736
胜特力电子(深圳) 86-755-83298787
Http://www.100y.com.tw

© 2007 Microchip Technology Inc.

FIGURE 1-1: HOLD TIMING

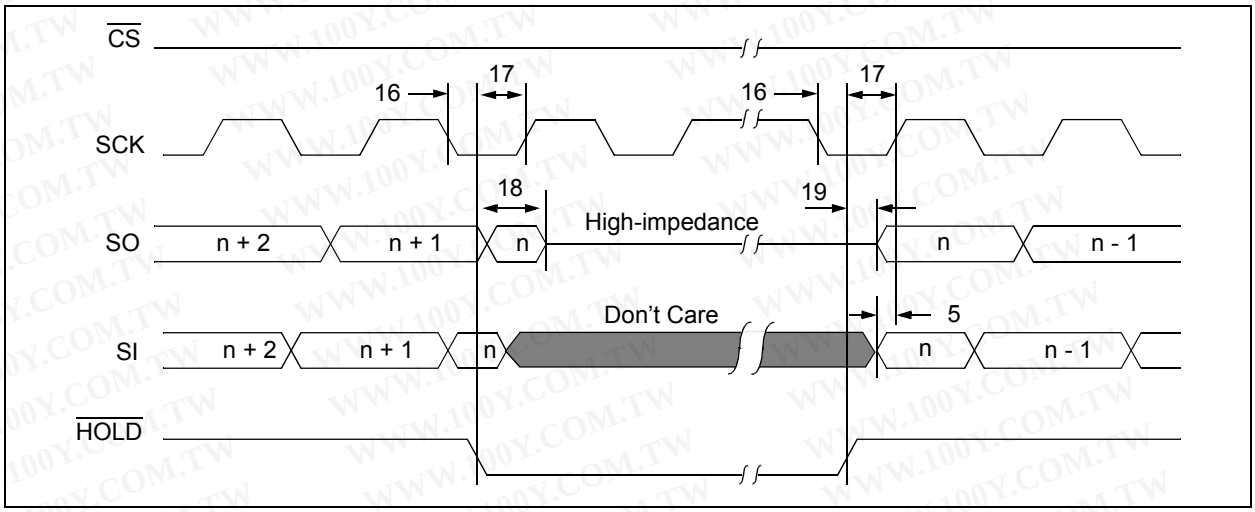

FIGURE 1-2: SERIAL INPUT TIMING

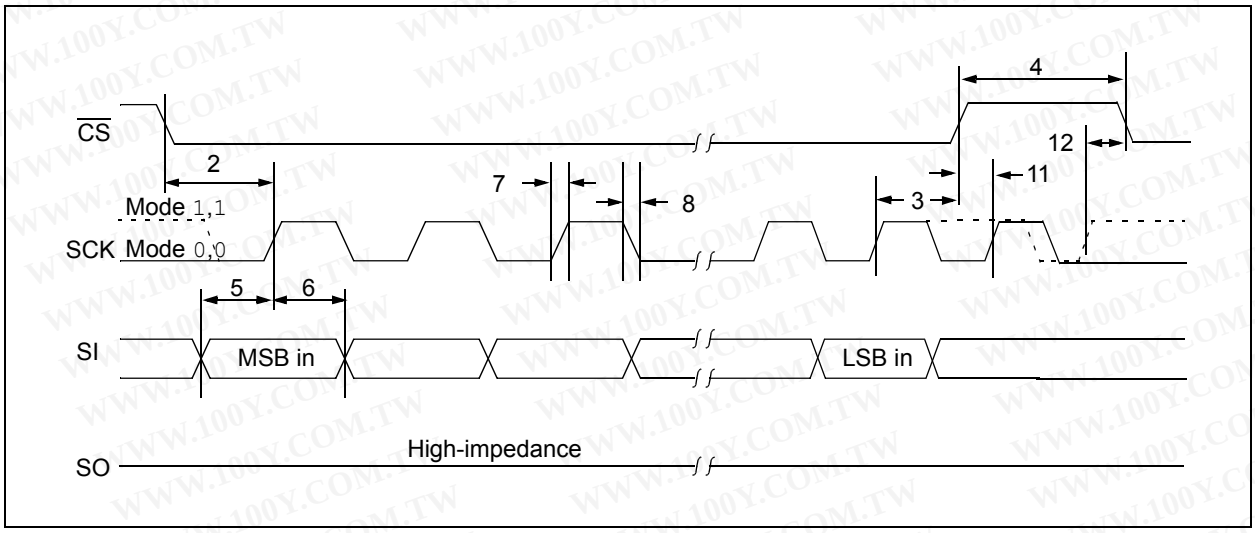

FIGURE 1-3: SERIAL OUTPUT TIMING

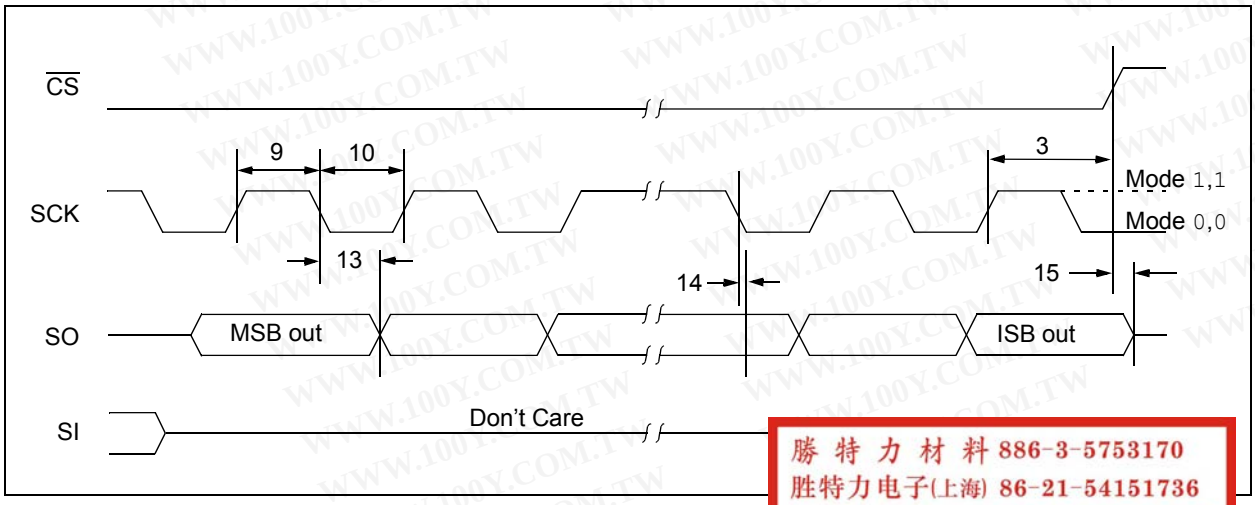

勝 特 力 材 料 886-3-5753170
胜特力电子(上海) 86-21-54151736
胜特力电子(深圳) 86-755-83298787
Http://www.100y.com.tw

2.0 FUNCTIONAL DESCRIPTION

2.1 Principles of Operation

The 25XX040A is a 512-byte Serial EEPROM designed to interface directly with the Serial Peripheral Interface (SPI) port of many of today's popular microcontroller families, including Microchip's PIC® microcontrollers. It may also interface with microcontrollers that do not have a built-in SPI port by using discrete I/O lines programmed properly in firmware to match the SPI protocol.

The 25XX040A contains an 8-bit instruction register. The device is accessed via the SI pin, with data being clocked in on the rising edge of SCK. The CS pin must be low and the HOLD pin must be high for the entire operation.

Table 2-1 contains a list of the possible instruction bytes and format for device operation. All instructions, addresses and data are transferred MSb first, LSb last.

Data (SI) is sampled on the first rising edge of SCK after CS goes low. If the clock line is shared with other peripheral devices on the SPI bus, the user can assert the HOLD input and place the 25XX040A in 'HOLD' mode. After releasing the HOLD pin, operation will resume from the point when the HOLD was asserted.

2.2 Read Sequence

The device is selected by pulling CS low. The 8-bit `READ` instruction is transmitted to the 25XX040A followed by a 9-bit address. The MSb (A8) is sent to the slave during the instruction sequence. See Figure 2-1 for more details.

After the correct `READ` instruction and address are sent, the data stored in the memory at the selected address is shifted out on the SO pin. Data stored in the memory at the next address can be read sequentially by continuing to provide clock pulses to the slave. The internal Address Pointer is automatically incremented to the next higher address after each byte of data is shifted out. When the highest address is reached (1FFh), the address counter rolls over to address 000h allowing the read cycle to be continued indefinitely. The read operation is terminated by raising the CS pin (Figure 2-1).

2.3 Write Sequence

Prior to any attempt to write data to the 25XX040A, the write enable latch must be set by issuing the `WREN` instruction (Figure 2-4). This is done by setting CS low and then clocking out the proper instruction into the 25XX040A. After all eight bits of the instruction are transmitted, CS must be driven high to set the write enable latch.

If the write operation is initiated immediately after the `WREN` instruction without CS driven high, data will not be written to the array since the write enable latch was not properly set.

After setting the write enable latch, the user may proceed by driving CS low, issuing a `WRITE` instruction, followed by the remainder of the address, and then the data to be written. Keep in mind that the Most Significant address bit (A8) is included in the instruction byte for the 25XX040A. Up to 16 bytes of data can be sent to the device before a write cycle is necessary. The only restriction is that all of the bytes must reside in the same page. Additionally, a page address begins with `'XXXX 0000'` and ends with `'XXXX 1111'`. If the internal address counter reaches `'XXXX 1111'` and clock signals continue to be applied to the chip, the address counter will roll back to the first address of the page and over-write any data that previously existed in those locations.

Note:	Page write operations are limited to writing bytes within a single physical page, **regardless** of the number of bytes actually being written. Physical page boundaries start at addresses that are integer multiples of the page buffer size (or 'page size') and, end at addresses that are integer multiples of page size – 1. If a Page Write command attempts to write across a physical page boundary, the result is that the data wraps around to the beginning of the current page (overwriting data previously stored there), instead of being written to the next page as might be expected. It is therefore necessary for the application software to prevent page write operations that would attempt to cross a page boundary.

For the data to be actually written to the array, the CS must be brought high after the Least Significant bit (D0) of the nth data byte has been clocked in. If CS is driven high at any other time, the write operation will not be completed. Refer to Figure 2-2 and Figure 2-3 for more detailed illustrations on the byte write sequence and the page write sequence, respectively. While the write is in progress, the STATUS register may be read to check the status of the WPEN, WIP, WEL, BP1 and BP0 bits (Figure 2-6). Attempting to read a memory array location will not be possible during a write cycle. Polling the WIP bit in the STATUS register is recommended in order to determine if a write cycle is in progress. When the write cycle is completed, the write enable latch is reset.

勝 特 力 材 料 886-3-5753170
胜特力电子(上海) 86-21-54151736
胜特力电子(深圳) 86-755-83298787
Http://www.100y.com.tw

© 2007 Microchip Technology Inc.

BLOCK DIAGRAM

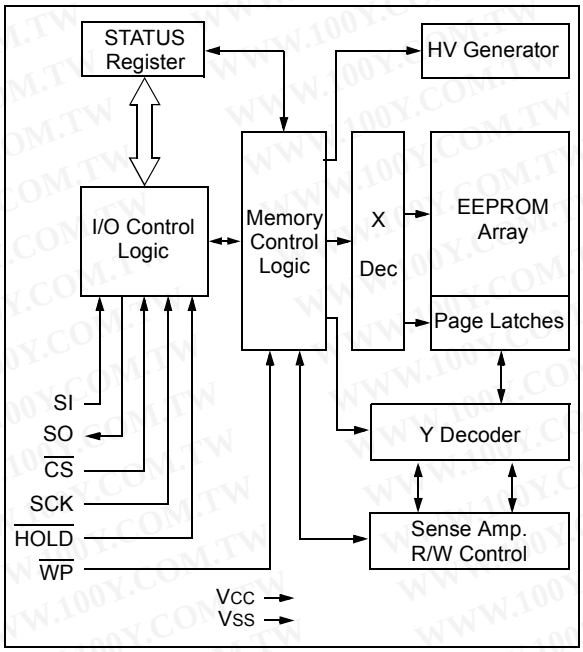

勝 特 力 材 料 886-3-5753170
胜特力电子(上海) 86-21-54151736
胜特力电子(深圳) 86-755-83298787
Http://www.100y.com.tw

TABLE 2-1: INSTRUCTION SET

Instruction Name	Instruction Format	Description
READ	0000 $A_8$011	Read data from memory array beginning at selected address
WRITE	0000 $A_8$010	Write data to memory array beginning at selected address
WRDI	0000 x100	Reset the write enable latch (disable write operations)
WREN	0000 x110	Set the write enable latch (enable write operations)
RDSR	0000 x101	Read STATUS register
WRSR	0000 x001	Write STATUS register

Note: A_8 is the 9th address bit, which is used to address the entire 512 byte array.
x = don't care.

FIGURE 2-1: READ SEQUENCE

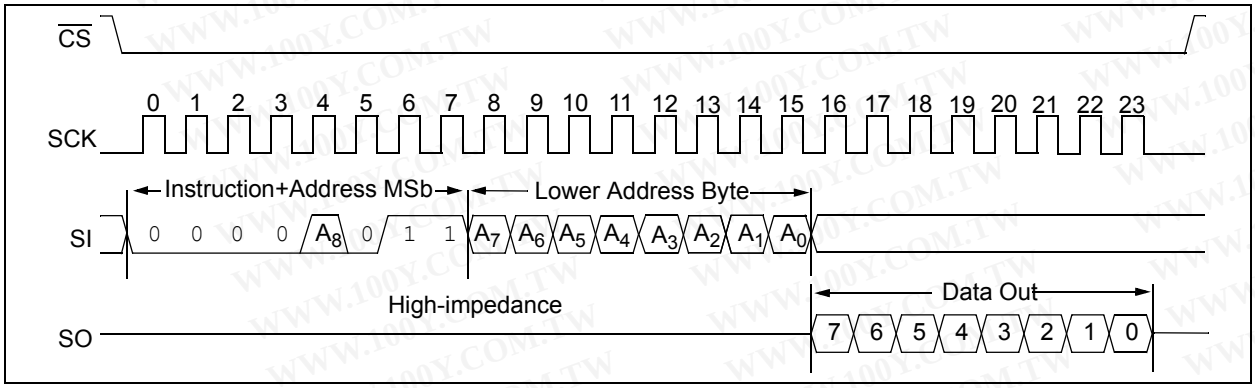

FIGURE 2-2: BYTE WRITE SEQUENCE

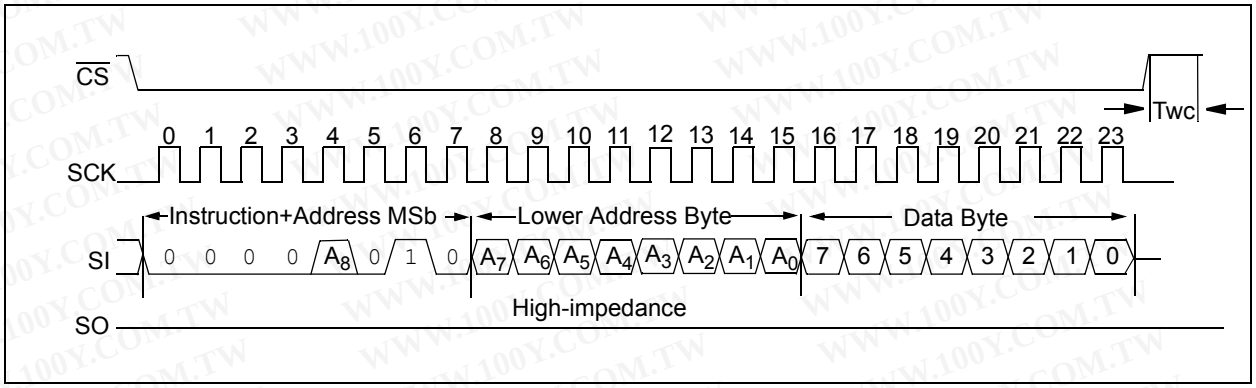

FIGURE 2-3: PAGE WRITE SEQUENCE

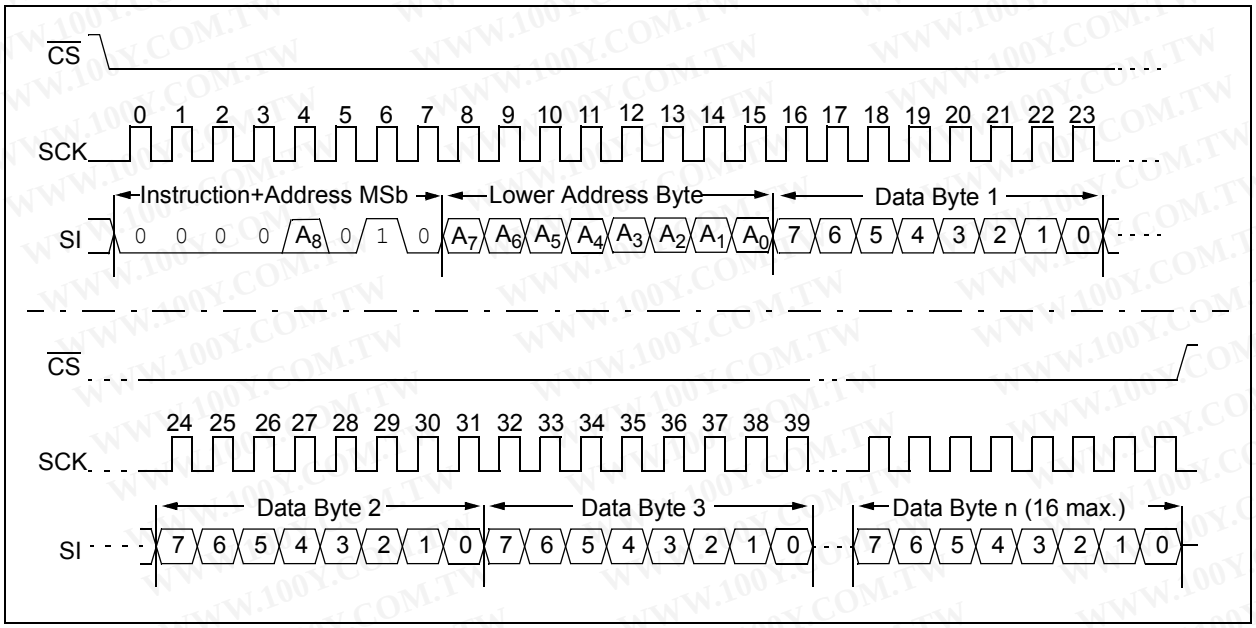

勝 特 力 材 料 886-3-5753170
胜特力电子(上海) 86-21-54151736
胜特力电子(深圳) 86-755-83298787
Http://www.100y.com.tw

© 2007 Microchip Technology Inc.

2.4 Write Enable (WREN) and Write Disable (WRDI)

The 25XX040A contains a write enable latch. See Table 2-4 for the Write-Protect Functionality Matrix. This latch must be set before any write operation will be completed internally. The WREN instruction will set the latch, and the WRDI will reset the latch.

The following is a list of conditions under which the write enable latch will be reset:

- Power-up
- WRDI instruction successfully executed
- WRSR instruction successfully executed
- WRITE instruction successfully executed
- $\overline{WP}$ pin is brought low

FIGURE 2-4: WRITE ENABLE SEQUENCE (WREN)

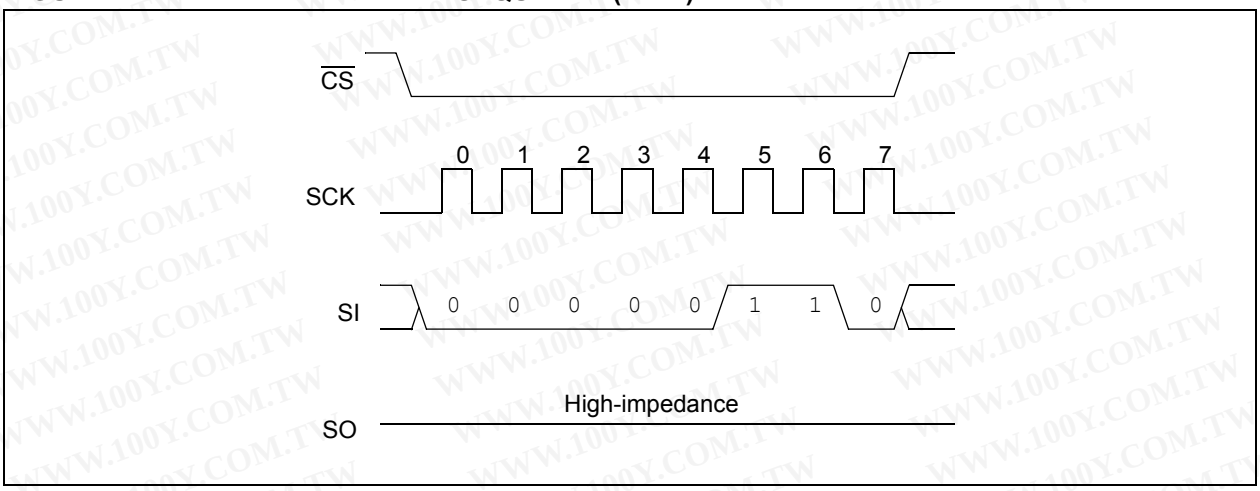

FIGURE 2-5: WRITE DISABLE SEQUENCE (WRDI)

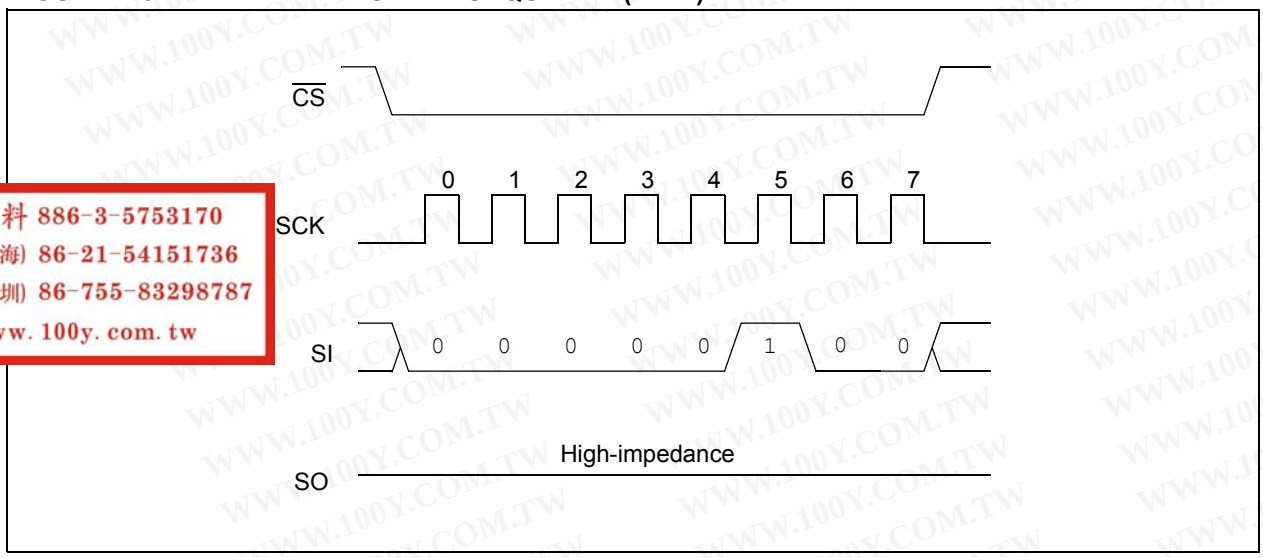

勝 特 力 材 料 886-3-5753170
胜特力电子(上海) 86-21-54151736
胜特力电子(深圳) 86-755-83298787
Http://www.100y.com.tw

2.5 Read Status Register Instruction (RDSR)

The Read Status Register instruction (RDSR) provides access to the STATUS register. See Figure 2-6 for the RDSR timing sequence. The STATUS register may be read at any time, even during a write cycle. The STATUS register is formatted as follows:

TABLE 2-2: STATUS REGISTER

7	6	5	4	3	2	1	0
–	–	–	–	W/R	W/R	R	R
X	X	X	X	BP1	BP0	WEL	WIP
W/R = writable/readable. R = read-only.							

The **Write-In-Process (WIP)** bit indicates whether the 25XX040A is busy with a write operation. When set to a '1', a write is in progress, when set to a '0', no write is in progress. This bit is read-only.

The **Write Enable Latch (WEL)** bit indicates the status of the write enable latch and is read-only. When set to a '1', the latch allows writes to the array, when set to a '0', the latch prohibits writes to the array. The state of this bit can always be updated via the WREN or WRDI commands regardless of the state of write protection on the STATUS register. These commands are shown in Figure 2-4 and Figure 2-5.

The **Block Protection (BP0 and BP1)** bits indicate which blocks are currently write-protected. These bits are set by the user issuing the WRSR instruction, which is shown in Figure 2-7. These bits are nonvolatile and are described in more detail in Table 2-3.

FIGURE 2-6: READ STATUS REGISTER TIMING SEQUENCE (RDSR)

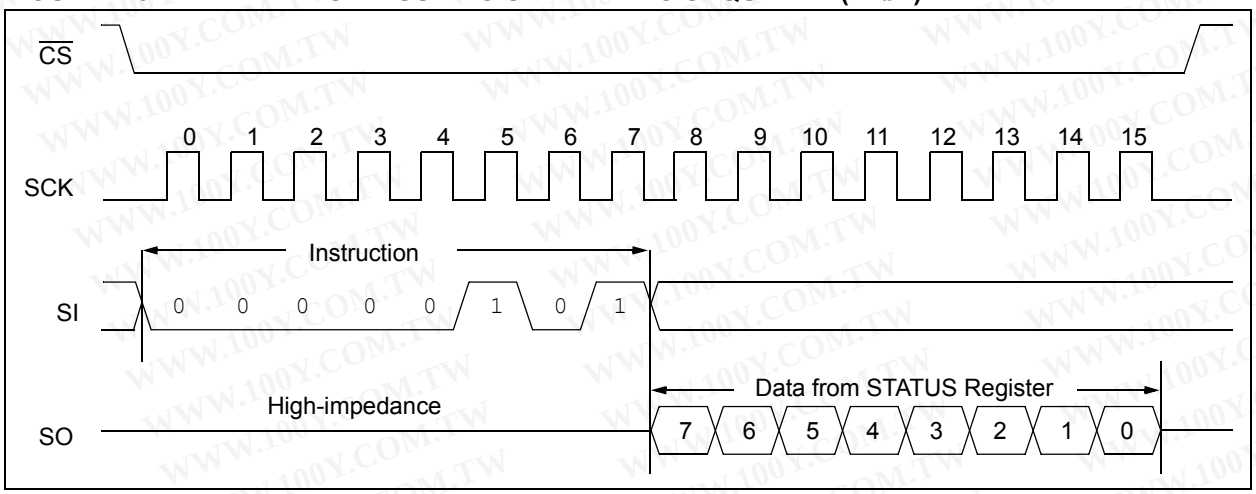

勝 特 力 材 料 886-3-5753170
胜特力电子(上海) 86-21-54151736
胜特力电子(深圳) 86-755-83298787
Http://www.100y.com.tw

© 2007 Microchip Technology Inc.

2.6 Write Status Register Instruction (WRSR)

The Write Status Register instruction (WRSR) allows the user to write to the nonvolatile bits in the STATUS register as shown in Table 2-2. See Figure 2-7 for the WRSR timing sequence. Four levels of protection for the array are selectable by writing to the appropriate bits in the STATUS register. The user has the ability to write-protect none, one, two or all four of the segments of the array as shown in Table 2-3.

TABLE 2-3: ARRAY PROTECTION

BP1	BP0	Array Addresses Write-Protected
0	0	none
0	1	upper 1/4 (180h-1FFh)
1	0	upper 1/2 (100h-1FFh)
1	1	all (000h-1FFh)

FIGURE 2-7: WRITE STATUS REGISTER TIMING SEQUENCE (WRSR)

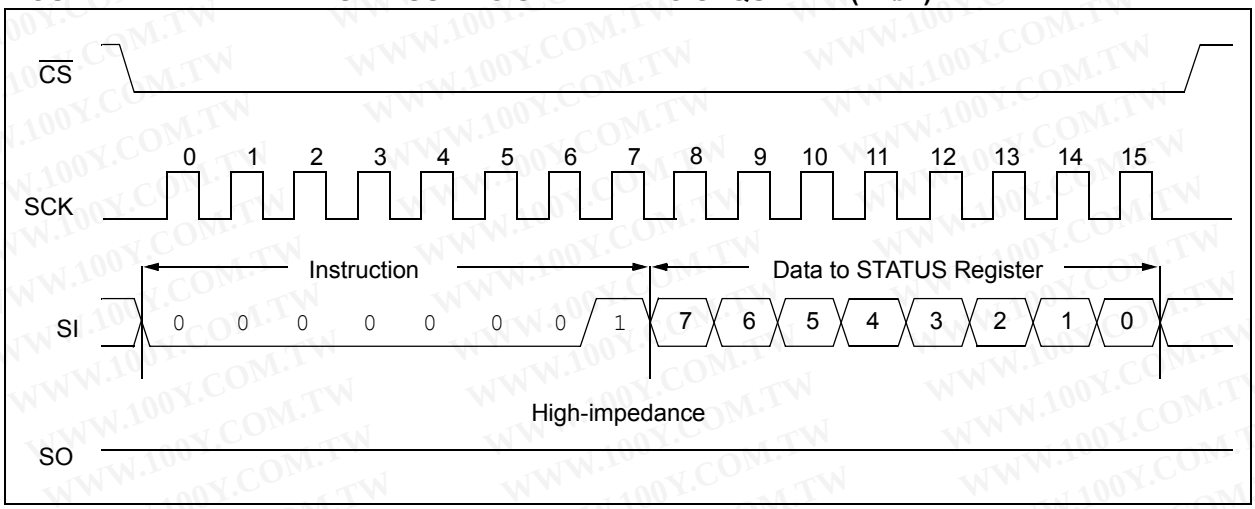

Note: An internal write cycle (TWC) is initiated on the rising edge of $\overline{CS}$ after a valid write STATUS register sequence.

勝 特 力 材 料 886-3-5753170
胜特力电子(上海) 86-21-54151736
胜特力电子(深圳) 86-755-83298787
Http://www.100y.com.tw

2.7 Data Protection

The following protection has been implemented to prevent inadvertent writes to the array:

- The write enable latch is reset on power-up
- A write enable instruction must be issued to set the write enable latch
- After a byte write, page write or STATUS register write, the write enable latch is reset
- $\overline{CS}$ must be set high after the proper number of clock cycles to start an internal write cycle
- Access to the array during an internal write cycle is ignored and programming is continued

2.8 Power-On State

The 25XX040A powers on in the following state:

- The device is in low-power Standby mode ($\overline{CS}$ = 1)
- The write enable latch is reset
- SO is in high-impedance state
- A high-to-low-level transition on $\overline{CS}$ is required to enter active state

TABLE 2-4: WRITE-PROTECT FUNCTIONALITY MATRIX

$\overline{WP}$ (pin 3)	WEL (SR bit 1)	Protected Blocks	Unprotected Blocks	STATUS Register
0 (low)	x	Protected	Protected	Protected
1 (high)	0	Protected	Protected	Protected
1 (high)	1	Protected	Writable	Writable

x = don't care

勝 特 力 材 料 886-3-5753170
胜特力电子(上海) 86-21-54151736
胜特力电子(深圳) 86-755-83298787
Http://www.100y.com.tw

© 2007 Microchip Technology Inc.

3.0 PIN DESCRIPTIONS

The descriptions of the pins are listed in Table 3-1.

TABLE 3-1: PIN FUNCTION TABLE

Name	PDIP, SOIC, MSOP, TSSOP, DFN	Rotated TSSOP	SOT-23	Function
$\overline{CS}$	1	3	5	Chip Select Input
SO	2	4	4	Serial Data Output
$\overline{WP}$	3	5	—	Write-Protect Pin
VSS	4	6	2	Ground
SI	5	7	3	Serial Data Input
SCK	6	8	1	Serial Clock Input
$\overline{HOLD}$	7	1	—	Hold Input
VCC	8	2	6	Supply Voltage

3.1 Chip Select ($\overline{CS}$)

A low level on this pin selects the device. A high level deselects the device and forces it into Standby mode. However, a programming cycle which is already initiated or in progress will be completed, regardless of the $\overline{CS}$ input signal. If $\overline{CS}$ is brought high during a program cycle, the device will go into Standby mode as soon as the programming cycle is complete. When the device is deselected, SO goes to the high-impedance state, allowing multiple parts to share the same SPI bus. A low-to-high transition on $\overline{CS}$ after a valid write sequence initiates an internal write cycle. After power-up, a low level on $\overline{CS}$ is required prior to any sequence being initiated.

3.2 Serial Output (SO)

The SO pin is used to transfer data out of the 25XX040A. During a read cycle, data is shifted out on this pin after the falling edge of the serial clock.

3.3 Write-Protect ($\overline{WP}$)

The $\overline{WP}$ pin is a hardware write-protect input pin. When it is low, all writes to the array or STATUS registers are disabled, but any other operations function normally. When $\overline{WP}$ is high, all functions, including nonvolatile writes, operate normally. At any time, when $\overline{WP}$ is low, the write enable reset latch will be reset and programming will be inhibited. However, if a write cycle is already in progress, $\overline{WP}$ going low will not change or disable the write cycle. See Table 2-4 for the Write-Protect Functionality Matrix.

3.4 Serial Input (SI)

The SI pin is used to transfer data into the device. It receives instructions, addresses and data. Data is latched on the rising edge of the serial clock.

3.5 Serial Clock (SCK)

The SCK is used to synchronize the communication between a master and the 25XX040A. Instructions, addresses or data present on the SI pin are latched on the rising edge of the clock input, while data on the SO pin is updated after the falling edge of the clock input.

3.6 Hold ($\overline{HOLD}$)

The $\overline{HOLD}$ pin is used to suspend transmission to the 25XX040A while in the middle of a serial sequence without having to retransmit the entire sequence again. It must be held high any time this function is not being used. Once the device is selected and a serial sequence is underway, the $\overline{HOLD}$ pin may be pulled low to pause further serial communication without resetting the serial sequence. The $\overline{HOLD}$ pin must be brought low while SCK is low, otherwise the HOLD function will not be invoked until the next SCK high-to-low transition. The 25XX040A must remain selected during this sequence. The SI, SCK and SO pins are in a high-impedance state during the time the device is paused and transitions on these pins will be ignored. To resume serial communication, $\overline{HOLD}$ must be brought high while the SCK pin is low, otherwise serial communication will not resume. Lowering the HOLD line at any time will tri-state the SO line.

勝 特 力 材 料 886-3-5753170
胜特力电子(上海) 86-21-54151736
胜特力电子(深圳) 86-755-83298787
Http://www.100y.com.tw

4.0 PACKAGING INFORMATION

4.1 Package Marking Information

8-Lead PDIP

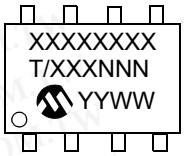

Example:

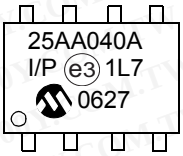

8-Lead SOIC

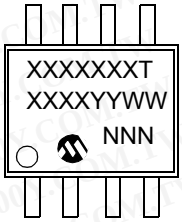

Example:

勝 特 力 材 料 886-3-5753170
胜特力电子(上海) 86-21-54151736
胜特力电子(深圳) 86-755-83298787
Http://www.100y.com.tw

8-Lead TSSOP

Example:

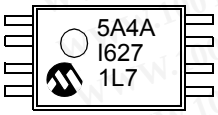

8-Lead MSOP (150 mil)

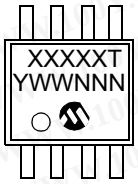

Example:

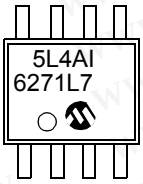

Part Number	1st Line Marking Codes						
	TSSOP		MSOP	SOT-23		DFN	
	Standard	Rotated		I Temp.	E Temp.	I Temp.	E Temp.
25AA040A	5A4A	A4AX	5A4AT	32NN	—	421	—
25LC040A	5L4A	L4AX	5L4AT	35NN	36NN	424	425
Note: T = Temperature grade (I, E) NN = Alphanumeric traceability code							

Legend:

XX...X	Customer-specific information
Y	Year code (last digit of calendar year)
YY	Year code (last 2 digits of calendar year)
WW	Week code (week of January 1 is week '01')
NNN	Alphanumeric traceability code
e3	Pb-free JEDEC designator for Matte Tin (Sn)
*	This package is Pb-free. The Pb-free JEDEC designator (e3) can be found on the outer packaging for this package.

Note: In the event the full Microchip part number cannot be marked on one line, it will be carried over to the next line, thus limiting the number of available characters for customer-specific information.

© 2007 Microchip Technology Inc.

Package Marking Information (continued)

8-Lead 2X3 DFN

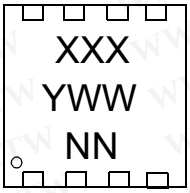

Example:

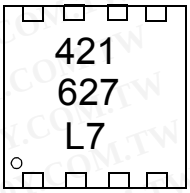

6-Lead SOT-23

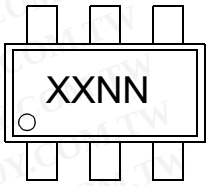

Example:

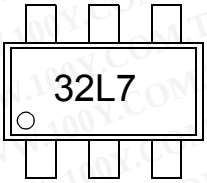

勝 特 力 材 料 886-3-5753170
胜特力电子(上海) 86-21-54151736
胜特力电子(深圳) 86-755-83298787
Http://www.100y.com.tw

8-Lead Plastic Dual In-Line (P) – 300 mil Body [PDIP]

Note: For the most current package drawings, please see the Microchip Packaging Specification located at http://www.microchip.com/packaging

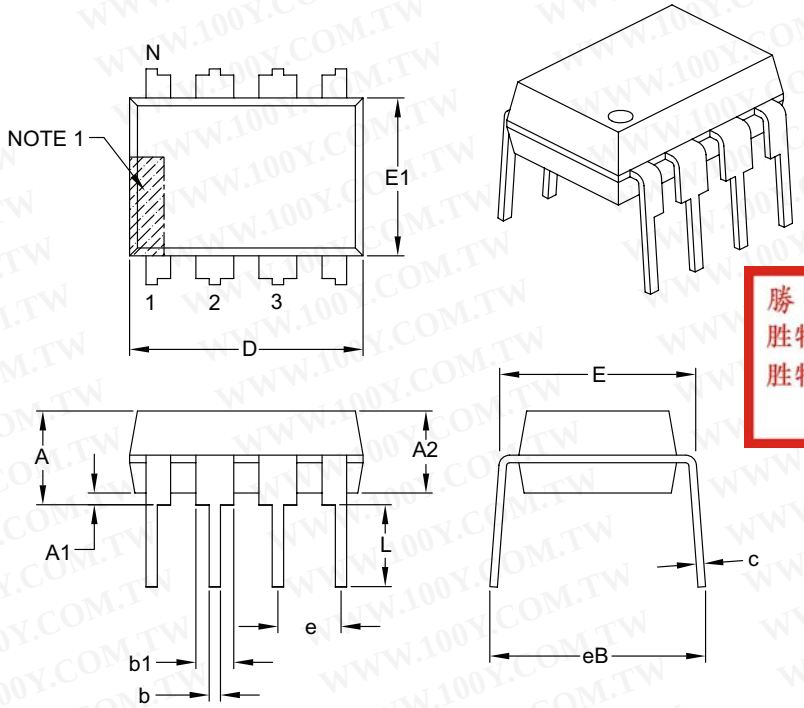

勝 特 力 材 料 886-3-5753170
胜特力电子(上海) 86-21-54151736
胜特力电子(深圳) 86-755-83298787
Http://www.100y.com.tw

Units		INCHES		
Dimension Limits		MIN	NOM	MAX
Number of Pins	N	8		
Pitch	e	.100 BSC		
Top to Seating Plane	A	–	–	.210
Molded Package Thickness	A2	.115	.130	.195
Base to Seating Plane	A1	.015	–	–
Shoulder to Shoulder Width	E	.290	.310	.325
Molded Package Width	E1	.240	.250	.280
Overall Length	D	.348	.365	.400
Tip to Seating Plane	L	.115	.130	.150
Lead Thickness	c	.008	.010	.015
Upper Lead Width	b1	.040	.060	.070
Lower Lead Width	b	.014	.018	.022
Overall Row Spacing §	eB	–	–	.430

Notes:

1. Pin 1 visual index feature may vary, but must be located with the hatched area.
2. § Significant Characteristic.
3. Dimensions D and E1 do not include mold flash or protrusions. Mold flash or protrusions shall not exceed .010" per side.
4. Dimensioning and tolerancing per ASME Y14.5M.
   BSC: Basic Dimension. Theoretically exact value shown without tolerances.

Microchip Technology Drawing C04-018B

© 2007 Microchip Technology Inc.

8-Lead Plastic Small Outline (SN) – Narrow, 3.90 mm Body [SOIC]

Note: For the most current package drawings, please see the Microchip Packaging Specification located at http://www.microchip.com/packaging

勝 特 力 材 料 886-3-5753170
胜特力电子(上海) 86-21-54151736
胜特力电子(深圳) 86-755-83298787
Http://www.100y.com.tw

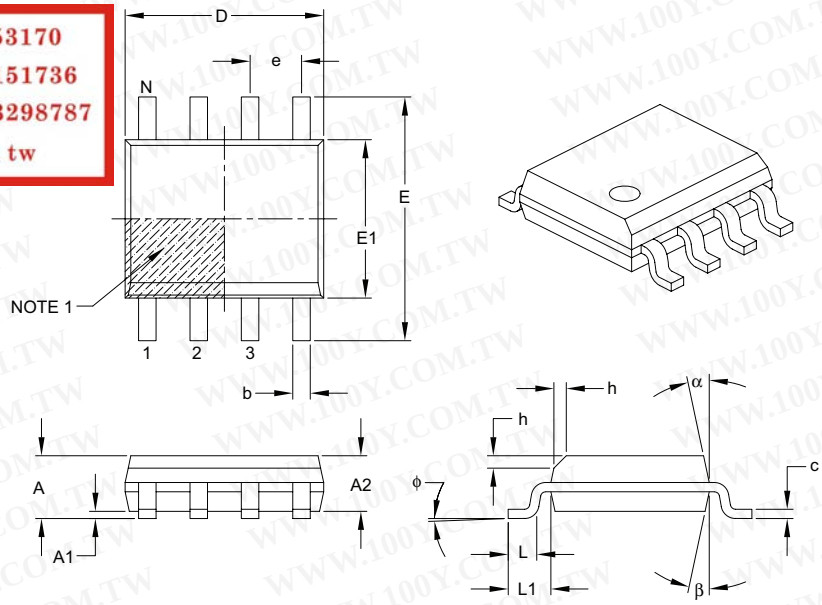

Units		MILLIMETERS		
Dimension Limits		MIN	NOM	MAX
Number of Pins	N		8	
Pitch	e		1.27 BSC	
Overall Height	A	–	–	1.75
Molded Package Thickness	A2	1.25	–	–
Standoff §	A1	0.10	–	0.25
Overall Width	E		6.00 BSC	
Molded Package Width	E1		3.90 BSC	
Overall Length	D		4.90 BSC	
Chamfer (optional)	h	0.25	–	0.50
Foot Length	L	0.40	–	1.27
Footprint	L1		1.04 REF	
Foot Angle	φ	0°	–	8°
Lead Thickness	c	0.17	–	0.25
Lead Width	b	0.31	–	0.51
Mold Draft Angle Top	α	5°	–	15°
Mold Draft Angle Bottom	β	5°	–	15°

Notes:

1. Pin 1 visual index feature may vary, but must be located within the hatched area.
2. § Significant Characteristic.
3. Dimensions D and E1 do not include mold flash or protrusions. Mold flash or protrusions shall not exceed 0.15 mm per side.
4. Dimensioning and tolerancing per ASME Y14.5M.
   BSC: Basic Dimension. Theoretically exact value shown without tolerances.
   REF: Reference Dimension, usually without tolerance, for information purposes only.

Microchip Technology Drawing C04-057B

8-Lead Plastic Small Outline (SN) – Narrow, 3.90 mm Body [SOIC]

Note: For the most current package drawings, please see the Microchip Packaging Specification located at http://www.microchip.com/packaging

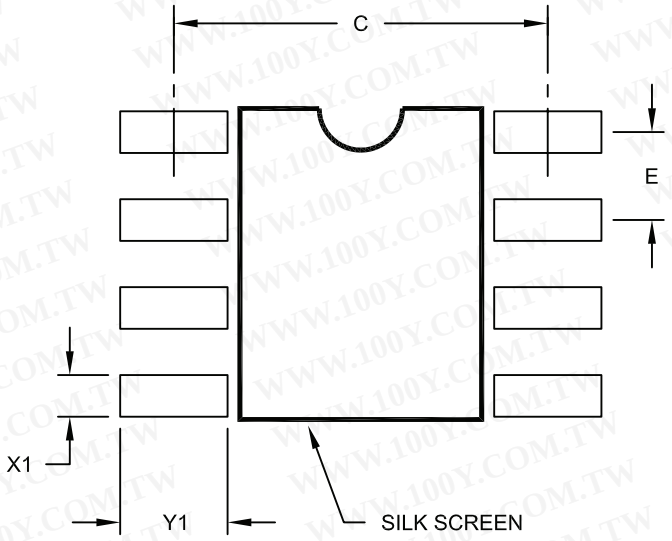

RECOMMENDED LAND PATTERN

勝 特 力 材 料 886-3-5753170
胜特力电子(上海) 86-21-54151736
胜特力电子(深圳) 86-755-83298787
Http://www.100y.com.tw

Units		MILLIMETERS		
Dimension Limits		MIN	NOM	MAX
Contact Pitch	E		1.27 BSC	
Contact Pad Spacing	C		5.40	
Contact Pad Width (X8)	X1			0.60
Contact Pad Length (X8)	Y1			1.55

Notes:

1. Dimensioning and tolerancing per ASME Y14.5M
   BSC: Basic Dimension. Theoretically exact value shown without tolerances.

Microchip Technology Drawing No. C04-2057A

© 2007 Microchip Technology Inc.

8-Lead Plastic Thin Shrink Small Outline (ST) – 4.4 mm Body [TSSOP]

Note: For the most current package drawings, please see the Microchip Packaging Specification located at http://www.microchip.com/packaging

勝 特 力 材 料 886-3-5753170
胜特力电子(上海) 86-21-54151736
胜特力电子(深圳) 86-755-83298787
Http://www.100y.com.tw

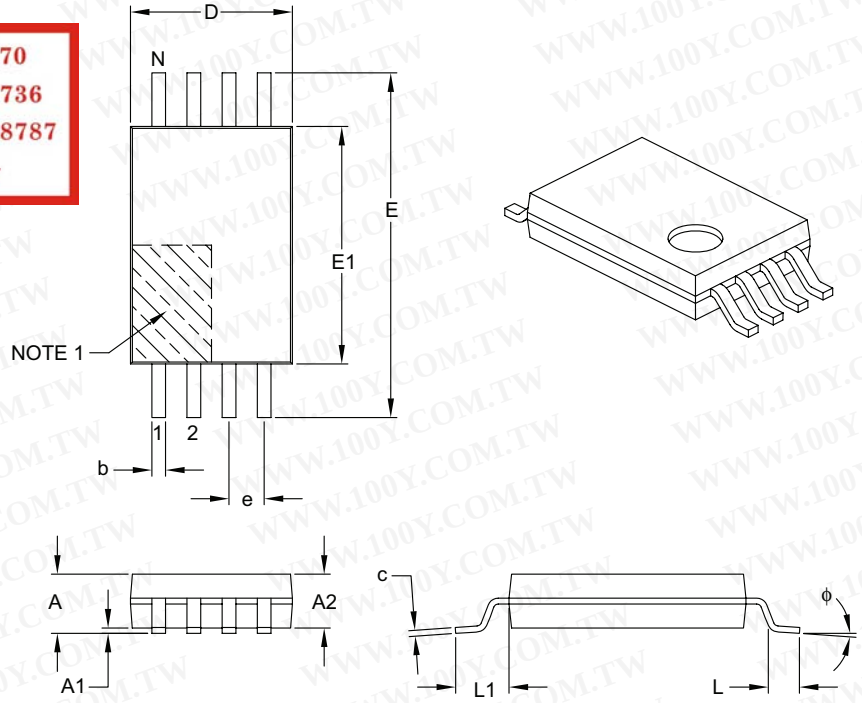

Units		MILLIMETERS		
Dimension Limits		MIN	NOM	MAX
Number of Pins	N	8		
Pitch	e	0.65 BSC		
Overall Height	A	–	–	1.20
Molded Package Thickness	A2	0.80	1.00	1.05
Standoff	A1	0.05	–	0.15
Overall Width	E	6.40 BSC		
Molded Package Width	E1	4.30	4.40	4.50
Molded Package Length	D	2.90	3.00	3.10
Foot Length	L	0.45	0.60	0.75
Footprint	L1	1.00 REF		
Foot Angle	ϕ	0°	–	8°
Lead Thickness	c	0.09	–	0.20
Lead Width	b	0.19	–	0.30

Notes:

1. Pin 1 visual index feature may vary, but must be located within the hatched area.
2. Dimensions D and E1 do not include mold flash or protrusions. Mold flash or protrusions shall not exceed 0.15 mm per side.
3. Dimensioning and tolerancing per ASME Y14.5M.
   BSC: Basic Dimension. Theoretically exact value shown without tolerances.
   REF: Reference Dimension, usually without tolerance, for information purposes only.

Microchip Technology Drawing C04-086B

8-Lead Plastic Micro Small Outline Package (MS) [MSOP]

Note: For the most current package drawings, please see the Microchip Packaging Specification located at http://www.microchip.com/packaging

勝 特 力 材 料 886-3-5753170
胜特力电子(上海) 86-21-54151736
胜特力电子(深圳) 86-755-83298787
Http://www.100y.com.tw

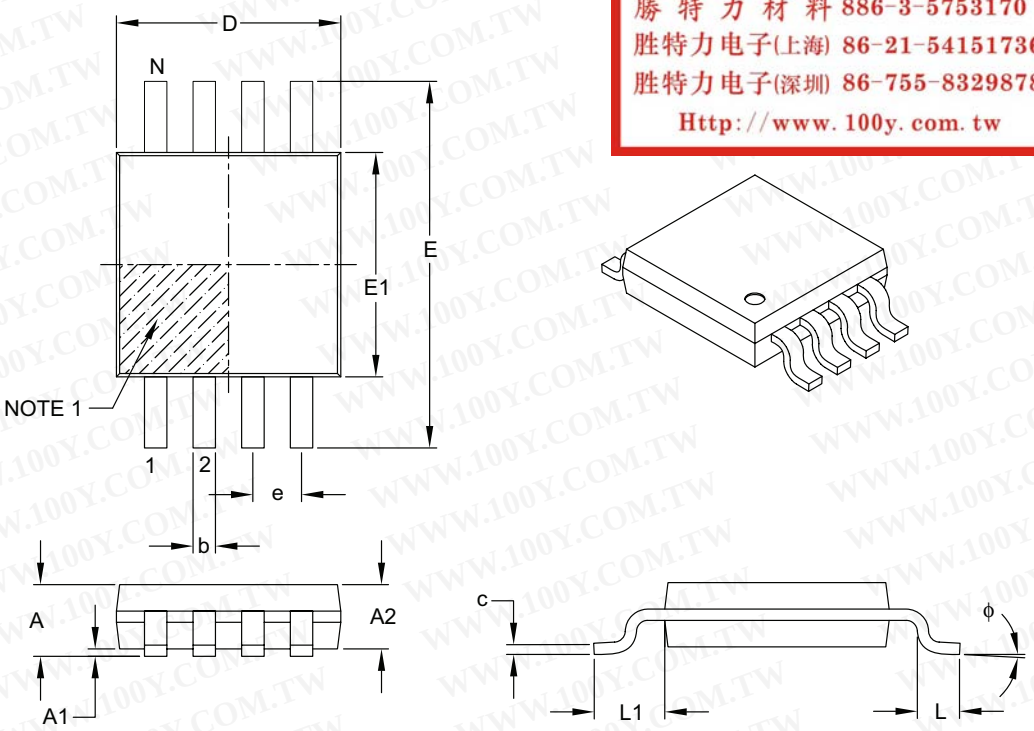

Units		MILLIMETERS		
Dimension Limits		MIN	NOM	MAX
Number of Pins	N		8	
Pitch	e		0.65 BSC	
Overall Height	A	–	–	1.10
Molded Package Thickness	A2	0.75	0.85	0.95
Standoff	A1	0.00	–	0.15
Overall Width	E		4.90 BSC	
Molded Package Width	E1		3.00 BSC	
Overall Length	D		3.00 BSC	
Foot Length	L	0.40	0.60	0.80
Footprint	L1		0.95 REF	
Foot Angle	ϕ	0°	–	8°
Lead Thickness	c	0.08	–	0.23
Lead Width	b	0.22	–	0.40

Notes:
1. Pin 1 visual index feature may vary, but must be located within the hatched area.
2. Dimensions D and E1 do not include mold flash or protrusions. Mold flash or protrusions shall not exceed 0.15 mm per side.
3. Dimensioning and tolerancing per ASME Y14.5M.
   BSC: Basic Dimension. Theoretically exact value shown without tolerances.
   REF: Reference Dimension, usually without tolerance, for information purposes only.

Microchip Technology Drawing C04-111B

© 2007 Microchip Technology Inc.

8-Lead Plastic Dual Flat, No Lead Package (MC) – 2x3x0.9 mm Body [DFN]

Note: For the most current package drawings, please see the Microchip Packaging Specification located at http://www.microchip.com/packaging

勝 特 力 材 料 886-3-5753170
胜特力电子(上海) 86-21-54151736
胜特力电子(深圳) 86-755-83298787
Http://www.100y.com.tw

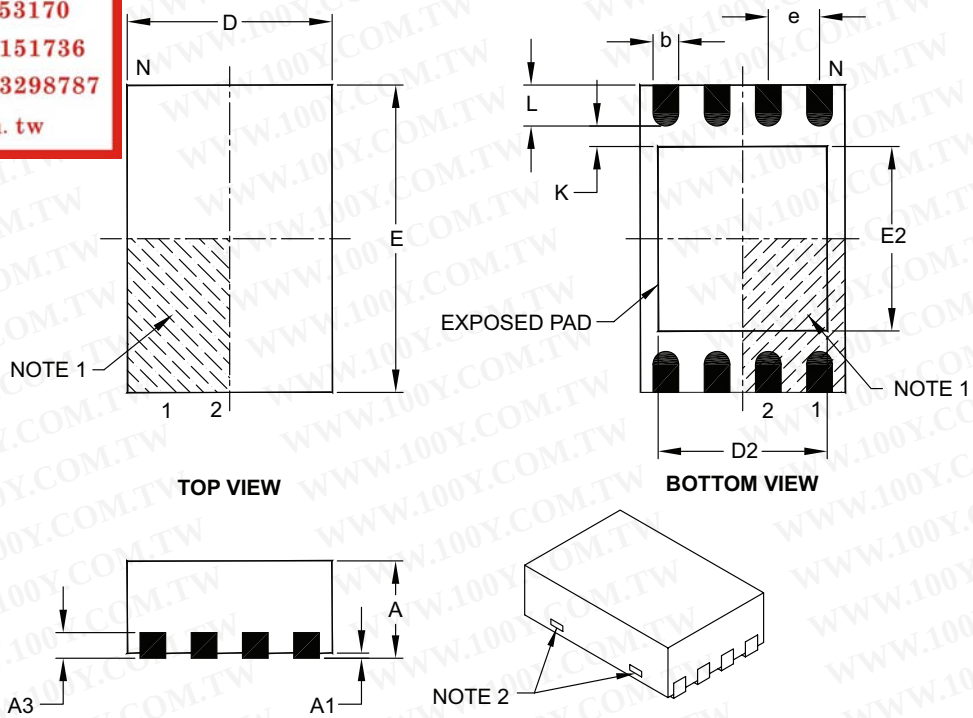

Units		MILLIMETERS		
Dimension Limits		MIN	NOM	MAX
Number of Pins	N		8	
Pitch	e		0.50 BSC	
Overall Height	A	0.80	0.90	1.00
Standoff	A1	0.00	0.02	0.05
Contact Thickness	A3		0.20 REF	
Overall Length	D		2.00 BSC	
Overall Width	E		3.00 BSC	
Exposed Pad Length	D2	1.30	–	1.75
Exposed Pad Width	E2	1.50	–	1.90
Contact Width	b	0.18	0.25	0.30
Contact Length	L	0.30	0.40	0.50
Contact-to-Exposed Pad	K	0.20	–	–

Notes:

1. Pin 1 visual index feature may vary, but must be located within the hatched area.
2. Package may have one or more exposed tie bars at ends.
3. Package is saw singulated.
4. Dimensioning and tolerancing per ASME Y14.5M.
   BSC: Basic Dimension. Theoretically exact value shown without tolerances.
   REF: Reference Dimension, usually without tolerance, for information purposes only.

Microchip Technology Drawing C04-123B

6-Lead Plastic Small Outline Transistor (CH) [SOT-23]

Note: For the most current package drawings, please see the Microchip Packaging Specification located at http://www.microchip.com/packaging

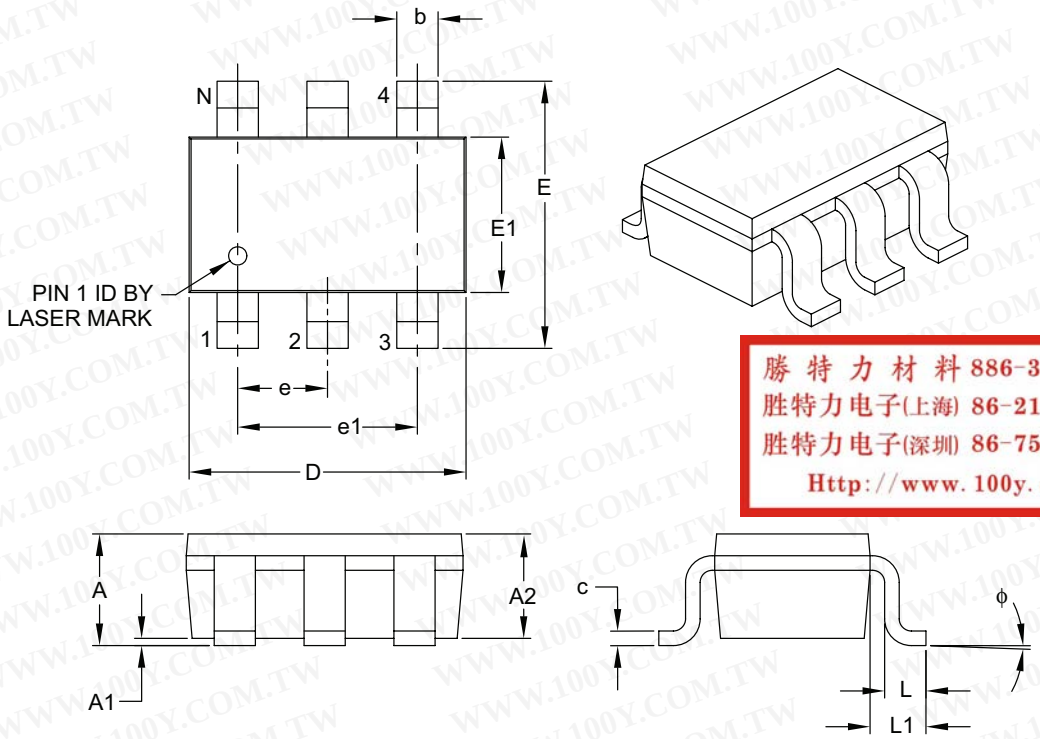

勝 特 力 材 料 886-3-5753170
胜特力电子(上海) 86-21-54151736
胜特力电子(深圳) 86-755-83298787
Http://www.100y.com.tw

Units		MILLIMETERS		
Dimension Limits		MIN	NOM	MAX
Number of Pins	N		6	
Pitch	e		0.95 BSC	
Outside Lead Pitch	e1		1.90 BSC	
Overall Height	A	0.90	–	1.45
Molded Package Thickness	A2	0.89	–	1.30
Standoff	A1	0.00	–	0.15
Overall Width	E	2.20	–	3.20
Molded Package Width	E1	1.30	–	1.80
Overall Length	D	2.70	–	3.10
Foot Length	L	0.10	–	0.60
Footprint	L1	0.35	–	0.80
Foot Angle	ϕ	0°	–	30°
Lead Thickness	c	0.08	–	0.26
Lead Width	b	0.20	–	0.51

Notes:

1. Dimensions D and E1 do not include mold flash or protrusions. Mold flash or protrusions shall not exceed 0.127 mm per side.
2. Dimensioning and tolerancing per ASME Y14.5M.
   BSC: Basic Dimension. Theoretically exact value shown without tolerances.

Microchip Technology Drawing C04-028B

© 2007 Microchip Technology Inc.

APPENDIX A: REVISION HISTORY

Revision B

Corrections to Section 1.0, Electrical Characteristics.

Revision C

Added Packages SOT-23, DFN and X-rotated TSSOP; Revised AC Char., Params. 9, 10; Revised Package Legend.

Revision D

Removed Preliminary status; Replaced package drawings (Rev. AP); Revise Table 1-1, Param. D004, D007, D008; Revise Table 1-2, Param. 7, 8, 9 ,10.

Revision E

Revised Features (Pb-free); Replaced Package Drawings.

勝 特 力 材 料 886-3-5753170
胜特力电子(上海) 86-21-54151736
胜特力电子(深圳) 86-755-83298787
Http://www.100y.com.tw

NOTES:

勝 特 力 材 料 886-3-5753170
胜特力电子(上海) 86-21-54151736
胜特力电子(深圳) 86-755-83298787
Http://www.100y.com.tw

© 2007 Microchip Technology Inc.

THE MICROCHIP WEB SITE

Microchip provides online support via our WWW site at www.microchip.com. This web site is used as a means to make files and information easily available to customers. Accessible by using your favorite Internet browser, the web site contains the following information:

- **Product Support** – Data sheets and errata, application notes and sample programs, design resources, user's guides and hardware support documents, latest software releases and archived software
- **General Technical Support** – Frequently Asked Questions (FAQ), technical support requests, online discussion groups, Microchip consultant program member listing
- **Business of Microchip** – Product selector and ordering guides, latest Microchip press releases, listing of seminars and events, listings of Microchip sales offices, distributors and factory representatives

CUSTOMER CHANGE NOTIFICATION SERVICE

Microchip's customer notification service helps keep customers current on Microchip products. Subscribers will receive e-mail notification whenever there are changes, updates, revisions or errata related to a specified product family or development tool of interest.

To register, access the Microchip web site at www.microchip.com, click on Customer Change Notification and follow the registration instructions.

CUSTOMER SUPPORT

Users of Microchip products can receive assistance through several channels:

- Distributor or Representative
- Local Sales Office
- Field Application Engineer (FAE)
- Technical Support
- Development Systems Information Line

Customers should contact their distributor, representative or field application engineer (FAE) for support. Local sales offices are also available to help customers. A listing of sales offices and locations is included in the back of this document.

Technical support is available through the web site at: http://support.microchip.com

勝 特 力 材 料 886-3-5753170
胜特力电子(上海) 86-21-54151736
胜特力电子(深圳) 86-755-83298787
Http://www.100y.com.tw

READER RESPONSE

It is our intention to provide you with the best documentation possible to ensure successful use of your Microchip product. If you wish to provide your comments on organization, clarity, subject matter, and ways in which our documentation can better serve you, please FAX your comments to the Technical Publications Manager at (480) 792-4150.

Please list the following information, and use this outline to provide us with your comments about this document.

To: Technical Publications Manager Total Pages Sent _____

RE: Reader Response

From: Name _____

Company _____

Address _____

City / State / ZIP / Country _____

Telephone: (_____) _____ - _____ FAX: (_____) _____ - _____

Application (optional):

Would you like a reply? ____Y ____N

Device: 25AA040A/25LC040A Literature Number: DS21827E

勝 特 力 材 料 886-3-5753170
胜特力电子(上海) 86-21-54151736
胜特力电子(深圳) 86-755-83298787
Http://www.100y.com.tw

Questions:

1. What are the best features of this document?

_____

_____

2. How does this document meet your hardware and software development needs?

_____

_____

3. Do you find the organization of this document easy to follow? If not, why?

_____

_____

4. What additions to the document do you think would enhance the structure and subject?

_____

_____

5. What deletions from the document could be made without affecting the overall usefulness?

_____

_____

6. Is there any incorrect or misleading information (what and where)?

_____

_____

7. How would you improve this document?

_____

_____

© 2007 Microchip Technology Inc.

PRODUCT IDENTIFICATION SYSTEM

To order or obtain information, e.g., on pricing or delivery, refer to the factory or the listed sales office.

PART NO.	X	—	X	/XX
Device	Tape & Reel		Temperature	Package

Device:	25AA040A		4k-bit, 1.8V, 16 Byte Page, SPI Serial EEPROM
	25LC040A		4k-bit, 2.5V, 16 Byte Page, SPI Serial EEPROM
	25AA040AX		4k-bit, 1.8V, 16 Byte Page, SPI Serial EEPROM, in alternate pinout (ST only)
	25LC040AX		4k-bit, 2.5V, 16 Byte Page, SPI EEPROM, in alternate pinout (ST only)
Tape & Reel:	Blank	=	Standard packaging
	T	=	Tape & Reel
Temperature Range:	I	=	-40°C to+85°C
	E	=	-40°C to+125°C
Package:	MS	=	Plastic MSOP (Micro Small Outline), 8-lead
	P	=	Plastic DIP (300 mil body), 8-lead
	SN	=	Plastic SOIC (3.90 mm body), 8-lead
	ST	=	TSSOP, 8-lead
	MC	=	2x3 DFN, 8-lead
	OT	=	SOT-23, 6-lead (Tape and Reel only)

Examples:

a) 25AA040A-I/MS = 4k-bit, 16-byte page, 1.8V Serial EEPROM, Industrial temp., MSOP package

b) 25AA040AT-I/SN = 4k-bit, 16-byte page, 1.8V Serial EEPROM, Industrial temp., Tape & Reel, SOIC package

c) 25LC040AT-I/SN = 4k-bit, 16-byte page, 2.5V Serial EEPROM, Industrial temp., Tape & Reel, SOIC package

d) 25LC040AT-I/ST = 4k-bit, 16-byte page, 2.5V Serial EEPROM, Industrial temp., Tape & Reel, TSSOP package

e) 25LC040AT-E/SN = 4k-bit, 16-byte page, 2.5V Serial EEPROM, Extended temp., Tape & Reel, SOIC package

f) 25LC040AX-E/ST = 4k-bit, 16-byte page, 2.5V Serial EEPROM, Extended temp., rotated pinout, TSSOP package

勝 特 力 材 料 886-3-5753170
胜特力电子(上海) 86-21-54151736
胜特力电子(深圳) 86-755-83298787
Http://www.100y.com.tw

NOTES:

勝 特 力 材 料 886-3-5753170
胜特力电子(上海) 86-21-54151736
胜特力电子(深圳) 86-755-83298787
Http://www.100y.com.tw

© 2007 Microchip Technology Inc.

Note the following details of the code protection feature on Microchip devices:

- Microchip products meet the specification contained in their particular Microchip Data Sheet.
- Microchip believes that its family of products is one of the most secure families of its kind on the market today, when used in the intended manner and under normal conditions.
- There are dishonest and possibly illegal methods used to breach the code protection feature. All of these methods, to our knowledge, require using the Microchip products in a manner outside the operating specifications contained in Microchip's Data Sheets. Most likely, the person doing so is engaged in theft of intellectual property.
- Microchip is willing to work with the customer who is concerned about the integrity of their code.
- Neither Microchip nor any other semiconductor manufacturer can guarantee the security of their code. Code protection does not mean that we are guaranteeing the product as "unbreakable."

Code protection is constantly evolving. We at Microchip are committed to continuously improving the code protection features of our products. Attempts to break Microchip's code protection feature may be a violation of the Digital Millennium Copyright Act. If such acts allow unauthorized access to your software or other copyrighted work, you may have a right to sue for relief under that Act.

Information contained in this publication regarding device applications and the like is provided only for your convenience and may be superseded by updates. It is your responsibility to ensure that your application meets with your specifications. MICROCHIP MAKES NO REPRESENTATIONS OR WARRANTIES OF ANY KIND WHETHER EXPRESS OR IMPLIED, WRITTEN OR ORAL, STATUTORY OR OTHERWISE, RELATED TO THE INFORMATION, INCLUDING BUT NOT LIMITED TO ITS CONDITION, QUALITY, PERFORMANCE, MERCHANTABILITY OR FITNESS FOR PURPOSE. Microchip disclaims all liability arising from this information and its use. Use of Microchip devices in life support and/or safety applications is entirely at the buyer's risk, and the buyer agrees to defend, indemnify and hold harmless Microchip from any and all damages, claims, suits, or expenses resulting from such use. No licenses are conveyed, implicitly or otherwise, under any Microchip intellectual property rights.

勝 特 力 材 料 886-3-5753170
胜特力电子(上海) 86-21-54151736
胜特力电子(深圳) 86-755-83298787
Http://www.100y.com.tw

Trademarks

The Microchip name and logo, the Microchip logo, Accuron, dsPIC, KEELOQ, KEELOQ logo, microID, MPLAB, PIC, PICmicro, PICSTART, PRO MATE, rfPIC and SmartShunt are registered trademarks of Microchip Technology Incorporated in the U.S.A. and other countries.

AmpLab, FilterLab, Linear Active Thermistor, Migratable Memory, MXDEV, MXLAB, SEEVAL, SmartSensor and The Embedded Control Solutions Company are registered trademarks of Microchip Technology Incorporated in the U.S.A.

Analog-for-the-Digital Age, Application Maestro, CodeGuard, dsPICDEM, dsPICDEM.net, dsPICworks, dsSPEAK, ECAN, ECONOMONITOR, FanSense, FlexROM, fuzzyLAB, In-Circuit Serial Programming, ICSP, ICEPIC, Mindi, MiWi, MPASM, MPLAB Certified logo, MPLIB, MPLINK, PICkit, PICDEM, PICDEM.net, PICLAB, PICtail, PowerCal, PowerInfo, PowerMate, PowerTool, REAL ICE, rfLAB, Select Mode, Smart Serial, SmartTel, Total Endurance, UNI/O, WiperLock and ZENA are trademarks of Microchip Technology Incorporated in the U.S.A. and other countries.

SQTP is a service mark of Microchip Technology Incorporated in the U.S.A.

All other trademarks mentioned herein are property of their respective companies.

© 2007, Microchip Technology Incorporated, Printed in the U.S.A., All Rights Reserved.

Printed on recycled paper.

QUALITY MANAGEMENT SYSTEM
CERTIFIED BY DNV
ISO/TS 16949:2002

Microchip received ISO/TS-16949:2002 certification for its worldwide headquarters, design and wafer fabrication facilities in Chandler and Tempe, Arizona; Gresham, Oregon and design centers in California and India. The Company's quality system processes and procedures are for its PIC® MCUs and dsPIC® DSCs, KEELOQ® code hopping devices, Serial EEPROMs, microperipherals, nonvolatile memory and analog products. In addition, Microchip's quality system for the design and manufacture of development systems is ISO 9001:2000 certified.

WORLDWIDE SALES AND SERVICE

AMERICAS

Corporate Office
2355 West Chandler Blvd.
Chandler, AZ 85224-6199
Tel: 480-792-7200
Fax: 480-792-7277
Technical Support:
http://support.microchip.com
Web Address:
www.microchip.com

Atlanta
Duluth, GA
Tel: 678-957-9614
Fax: 678-957-1455

Boston
Westborough, MA
Tel: 774-760-0087
Fax: 774-760-0088

Chicago
Itasca, IL
Tel: 630-285-0071
Fax: 630-285-0075

Dallas
Addison, TX
Tel: 972-818-7423
Fax: 972-818-2924

Detroit
Farmington Hills, MI
Tel: 248-538-2250
Fax: 248-538-2260

Kokomo
Kokomo, IN
Tel: 765-864-8360
Fax: 765-864-8387

Los Angeles
Mission Viejo, CA
Tel: 949-462-9523
Fax: 949-462-9608

Santa Clara
Santa Clara, CA
Tel: 408-961-6444
Fax: 408-961-6445

Toronto
Mississauga, Ontario,
Canada
Tel: 905-673-0699
Fax: 905-673-6509

ASIA/PACIFIC

Asia Pacific Office
Suites 3707-14, 37th Floor
Tower 6, The Gateway
Harbour City, Kowloon
Hong Kong
Tel: 852-2401-1200
Fax: 852-2401-3431

Australia - Sydney
Tel: 61-2-9868-6733
Fax: 61-2-9868-6755

China - Beijing
Tel: 86-10-8528-2100
Fax: 86-10-8528-2104

China - Chengdu
Tel: 86-28-8665-5511
Fax: 86-28-8665-7889

China - Fuzhou
Tel: 86-591-8750-3506
Fax: 86-591-8750-3521

China - Hong Kong SAR
Tel: 852-2401-1200
Fax: 852-2401-3431

China - Nanjing
Tel: 86-25-8473-2460
Fax: 86-25-8473-2470

China - Qingdao
Tel: 86-532-8502-7355
Fax: 86-532-8502-7205

China - Shanghai
Tel: 86-21-5407-5533
Fax: 86-21-5407-5066

China - Shenyang
Tel: 86-24-2334-2829
Fax: 86-24-2334-2393

China - Shenzhen
Tel: 86-755-8203-2660
Fax: 86-755-8203-1760

China - Shunde
Tel: 86-757-2839-5507
Fax: 86-757-2839-5571

China - Wuhan
Tel: 86-27-5980-5300
Fax: 86-27-5980-5118

China - Xian
Tel: 86-29-8833-7252
Fax: 86-29-8833-7256

ASIA/PACIFIC

India - Bangalore
Tel: 91-80-4182-8400
Fax: 91-80-4182-8422

India - New Delhi
Tel: 91-11-4160-8631
Fax: 91-11-4160-8632

India - Pune
Tel: 91-20-2566-1512
Fax: 91-20-2566-1513

Japan - Yokohama
Tel: 81-45-471- 6166
Fax: 81-45-471-6122

Korea - Daegu
Tel: 82-53-744-4301
Fax: 82-53-744-4302

Korea - Seoul
Tel: 82-2-554-7200
Fax: 82-2-558-5932 or
82-2-558-5934

Malaysia - Kuala Lumpur
Tel: 60-3-6201-9857
Fax: 60-3-6201-9859

Malaysia - Penang
Tel: 60-4-646-8870
Fax: 60-4-646-5086

Philippines - Manila
Tel: 63-2-634-9065
Fax: 63-2-634-9069

Singapore
Tel: 65-6334-8870
Fax: 65-6334-8850

Taiwan - Hsin Chu
Tel: 886-3-572-9526
Fax: 886-3-572-6459

Taiwan - Kaohsiung
Tel: 886-7-536-4818
Fax: 886-7-536-4803

Taiwan - Taipei
Tel: 886-2-2500-6610
Fax: 886-2-2508-0102

Thailand - Bangkok
Tel: 66-2-694-1351
Fax: 66-2-694-1350

EUROPE

Austria - Wels
Tel: 43-7242-2244-39
Fax: 43-7242-2244-393

Denmark - Copenhagen
Tel: 45-4450-2828
Fax: 45-4485-2829

France - Paris
Tel: 33-1-69-53-63-20
Fax: 33-1-69-30-90-79

Germany - Munich
Tel: 49-89-627-144-0
Fax: 49-89-627-144-44

Italy - Milan
Tel: 39-0331-742611
Fax: 39-0331-466781

Netherlands - Drunen
Tel: 31-416-690399
Fax: 31-416-690340

Spain - Madrid
Tel: 34-91-708-08-90
Fax: 34-91-708-08-91

UK - Wokingham
Tel: 44-118-921-5869
Fax: 44-118-921-5820

勝 特 力 材 料 886-3-5753170
胜特力电子(上海) 86-21-54151736
胜特力电子(深圳) 86-755-83298787
Http://www.100y.com.tw

09/10/07

© 2007 Microchip Technology Inc.