Dual-Channel, 14-Bit CCD Signal Processor with *Precision Timing*™ Core

AD9973

FEATURES

1.8 V analog and digital core supply voltage
Serial data link with reduced range LVDS outputs
Correlated double sampler (CDS) with –3 dB, 0 dB, +3 dB, +6 dB gain
6 dB to 42 dB, 10-bit variable gain amplifier (VGA)
14-bit, 65 MHz analog-to-digital converter
Black level clamp with variable level control
Complete on-chip timing generator
***Precision Timing* core with 240 ps resolution @ 65 MHz**
On-chip 3 V horizontal and RG drivers
6 mm × 6 mm, 84-ball CSP_BGA package

APPLICATIONS

Professional HDTV camcorders
Professional, high-end digital cameras
Broadcast cameras
Industrial high speed cameras

GENERAL DESCRIPTION

The AD9973 is a highly integrated dual channel CCD signal processor for high speed digital video camera applications. Each channel is specified at pixel rates of up to 65 MHz, and consists of a complete analog front end with analog-to-digital conversion, combined with a programmable timing driver. The *Precision Timing* core allows adjustment of high speed clocks with 240 ps resolution at 65 MHz operation. The AD9973 also contains a reduced range LVDS interface for the dual-channel data outputs.

Each analog front end (AFE) includes black level clamping, CDS, VGA, and a 65 MSPS, 14-bit analog-to-digital converter. The timing driver provides the high speed CCD clock drivers for RG, HL, and H1 to H4. Operation is programmed using a 3-wire serial interface.

Packaged in a space-saving 6 mm × 6 mm, 84-ball CSP_BGA, the AD9973 is specified over an operating temperature range of –25°C to +85°C.

勝 特 力 材 料 886-3-5753170
胜特力电子(上海) 86-21-34970699
胜特力电子(深圳) 86-755-83298787
Http://www.100y.com.tw

FUNCTIONAL BLOCK DIAGRAM

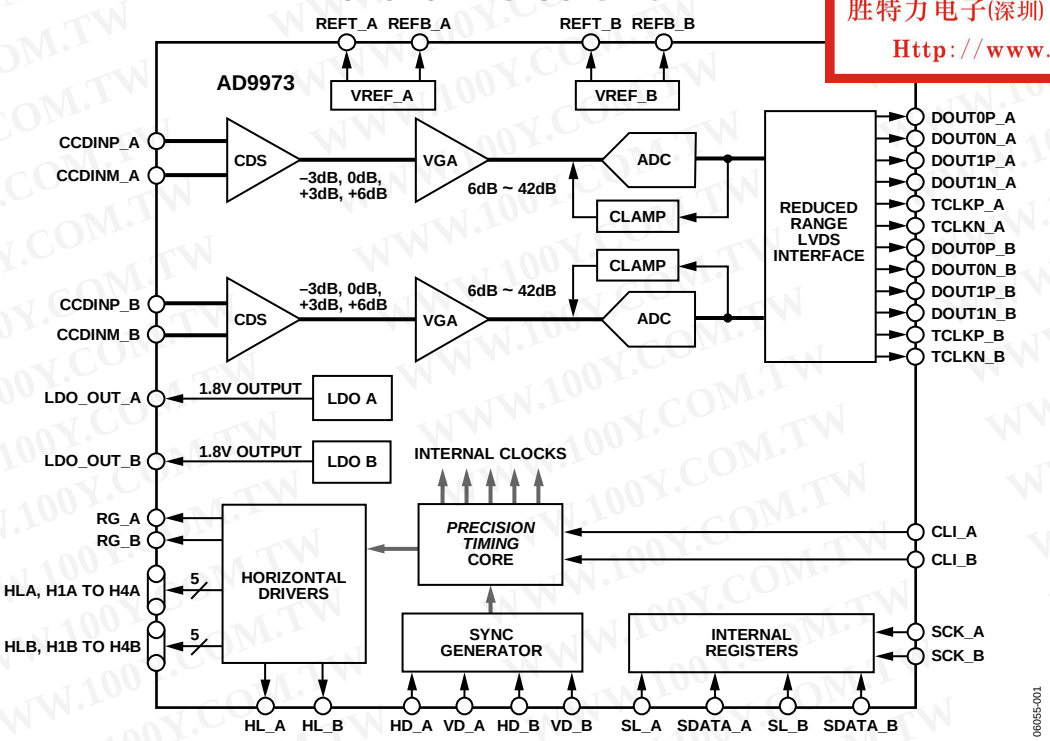

Figure 1.

For more information about the AD9973, contact Analog Devices, Inc. via email at afe.ccd@analog.com.

Rev. SpA
Information furnished by Analog Devices is believed to be accurate and reliable. However, no responsibility is assumed by Analog Devices for its use, nor for any infringements of patents or other rights of third parties that may result from its use. Specifications subject to change without notice. No license is granted by implication or otherwise under any patent or patent rights of Analog Devices. Trademarks and registered trademarks are the property of their respective owners.

One Technology Way, P.O. Box 9106, Norwood, MA 02062-9106, U.S.A.
Tel: 781.329.4700 www.analog.com
Fax: 781.461.3113 ©2006–2007 Analog Devices, Inc. All rights reserved.

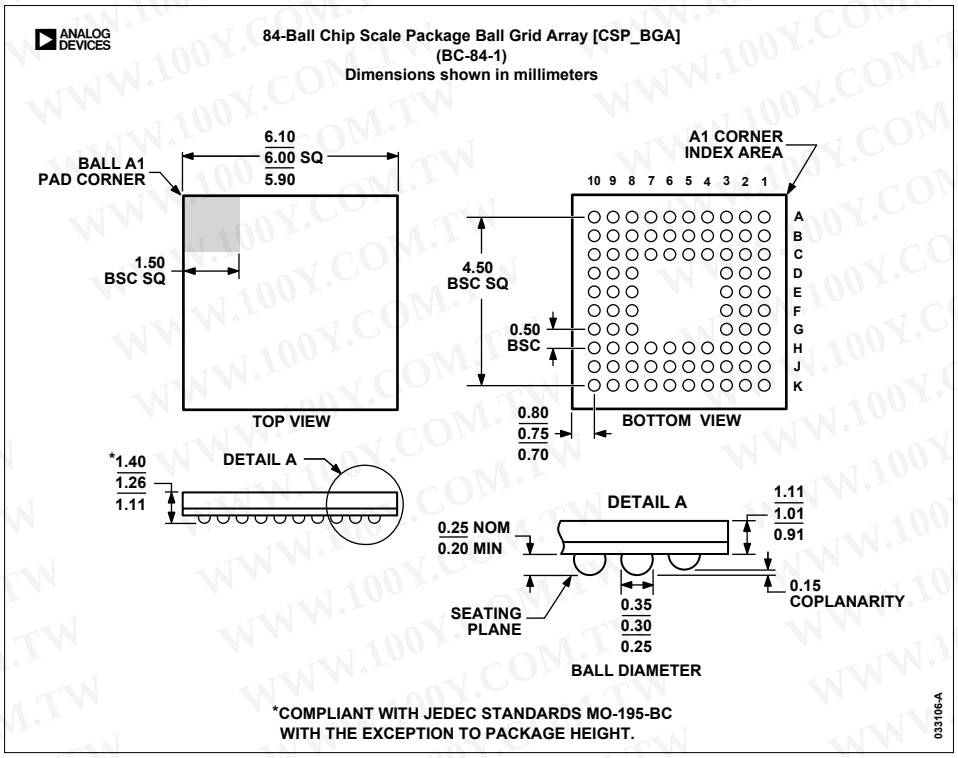

勝 特 力 材 料 886-3-5753170
胜特力电子(上海) 86-21-34970699
胜特力电子(深圳) 86-755-83298787
Http://www.100y.com.tw

©2006–2007 Analog Devices, Inc. All rights reserved. Trademarks and registered trademarks are the property of their respective owners.
D06055F-0-3/07(SpA)