MMBT2907A

60V PNP SURFACE MOUNT SMALL SIGNAL TRANSISTOR IN SOT23

Features

- Epitaxial Planar Die Construction
- Complementary NPN Type Available (MMBT2222A)
- Ideal for Low Power Amplification and Switching
- **Lead Free, RoHS Compliant (Note 1)**
- **Halogen and Antimony Free "Green" Device (Note 2)**
- **Qualified to AEC-Q101 Standards for High Reliability**

Mechanical Data

- Case: SOT23
- Case Material: molded Plastic, "Green" Compound
- UL Flammability Classification Rating 94V-0
- Moisture Sensitivity: Level 1 per J-STD-020
- Terminals: Matte Tin Finish
- Weight: 0.008 grams (approximate)

SOT23

Top View

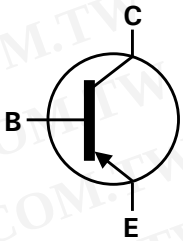

Device Symbol

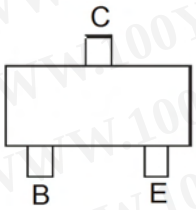

Top View
Pin-Out

Ordering Information (Note 3 & 4)

Product	Grade	Marking	Reel size (inches)	Tape width (mm)	Quantity per reel
MMBT2907A-7-F	Commercial	K2F	7	8	3,000
MMBT2907A-13-F	Commercial	K2F	13	8	10,000
MMBT2907AQ-7-F	Automotive	K2F	7	8	3,000

Notes:
1. No purposefully added lead.
2. Diodes Inc's "Green" policy can be found on our website at http://www.diodes.com
3. For packaging details, go to our website at http://www.diodes.com.
4. Products with Q-suffix are automotive grade. Automotive products are electrical and thermal the same as the commercial, except where specified

Marking Information

勝 特 力 材 料 886-3-5753170
胜特力电子(上海) 86-21-34970699
胜特力电子(深圳) 86-755-83298787
Http://www.100y.com.tw

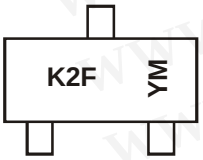

K2F = Product Type Marking Code
YM = Date Code Marking
Y = Year (ex: Y = 2011)
M = Month (ex: 9 = September)

Date Code Key

Year	2010	2011	2012	2013	2014	2015	2016	2017
Code	X	Y	Z	A	B	C	D	E

Month	Jan	Feb	Mar	Apr	May	Jun	Jul	Aug	Sep	Oct	Nov	Dec
Code	1	2	3	4	5	6	7	8	9	O	N	D

© Diodes Incorporated

Maximum Ratings @T_A = 25°C unless otherwise specified

Characteristic	Symbol	Value	Unit
Collector-Base Voltage	V_{CBO}	-60	V
Collector-Emitter Voltage	V_{CEO}	-60	V
Emitter-Base Voltage	V_{EBO}	-5.0	V
Collector Current - Continuous	I_C	-600	mA
Peak Collector Current	I_{CM}	-800	mA

Thermal Characteristics @T_A = 25°C unless otherwise specified

Characteristic	Symbol	Value	Unit
Power Dissipation (Note 5)	P_D	300	mW
Thermal Resistance, Junction to Ambient (Note 5)	$R_{\theta JA}$	417	°C/W
Thermal Resistance, Junction to Lead (Note 6)	$R_{\theta JL}$	350	°C/W
Operating and Storage and Temperature Range	T_J, T_{STG}	-55 to +150	°C

Notes: 5. For a device surface mounted on minimum recommended pad layout FR4 PCB with high coverage of single sided 1oz copper in still air conditions; the device is measured when operating in a steady-state condition.
6. Thermal resistance from junction to solder-point (at the end of the collector lead).

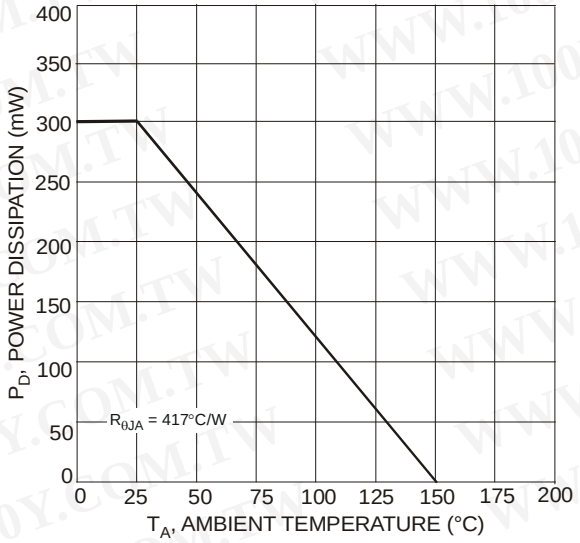

Fig. 1 Power Dissipation vs. Ambient Temperature

勝 特 力 材 料 886-3-5753170
胜特力电子(上海) 86-21-34970699
胜特力电子(深圳) 86-755-83298787
Http://www.100y.com.tw

© Diodes Incorporated

Electrical Characteristics @T_A = 25°C unless otherwise specified

Characteristic	Symbol	Min	Max	Unit	Test Condition
OFF CHARACTERISTICS (Note 7)					
Collector-Base Breakdown Voltage	$V_{(BR)CBO}$	-60	—	V	I_C = -10μA, I_E = 0
Collector-Emitter Breakdown Voltage	$V_{(BR)CEO}$	-60	—	V	I_C = -10mA, I_B = 0
Emitter-Base Breakdown Voltage	$V_{(BR)EBO}$	-5.0	—	V	I_E = -10μA, I_C = 0
Collector Cutoff Current	I_{CBO}	—	-10	nA μA	V_{CB} = -50V, I_E = 0 V_{CB} = -50V, I_E = 0, T_A = 125°C
Collector Cutoff Current	I_{CEX}	—	-50	nA	V_{CE} = -30V, $V_{EB(OFF)}$ = -0.5V
Base Cutoff Current	I_{BL}	—	-50	nA	V_{CE} = -30V, $V_{EB(OFF)}$ = -0.5V
ON CHARACTERISTICS (Note 7)					
DC Current Gain	h_{FE}	75 100 100 100 50	— — — 300 —	—	I_C = -100μA, V_{CE} = -10V I_C = -1.0mA, V_{CE} = -10V I_C = -10mA, V_{CE} = -10V I_C = -150mA, V_{CE} = -10V I_C = -500mA, V_{CE} = -10V
Collector-Emitter Saturation Voltage	$V_{CE(SAT)}$	—	-0.4 -1.6	V	I_C = -150mA, I_B = -15mA I_C = -500mA, I_B = -50mA
Base-Emitter Saturation Voltage	$V_{BE(SAT)}$	—	-1.3 -2.6	V	I_C = 150mA, I_B = 15mA I_C = 500mA, I_B = 50mA
SMALL SIGNAL CHARACTERISTICS					
Output Capacitance	C_{obo}	—	8.0	pF	V_{CB} = -10V, f = 1.0MHz, I_E = 0
Input Capacitance	C_{ibo}	—	30	pF	V_{EB} = -2.0V, f = 1.0MHz, I_C = 0
Current Gain-Bandwidth Product	f_T	200	—	MHz	V_{CE} = -20V, I_C = -50mA, f = 100MHz
SWITCHING CHARACTERISTICS					
Turn-On Time	t_{off}	—	45	ns	V_{CC} = -30V, I_C = -150mA, I_{B1} = -15mA
Delay Time	t_d	—	10	ns	
Rise Time	t_r	—	40	ns	
Turn-Off Time	t_{off}	—	100	ns	V_{CC} = -6.0V, I_C = -150mA, I_{B1} = I_{B2} = -15mA
Storage Time	t_s	—	80	ns	
Fall Time	t_f	—	30	ns	

Notes: 7. Short duration pulse test used to minimize self-heating effect.

勝 特 力 材 料 886-3-5753170
胜特力电子(上海) 86-21-34970699
胜特力电子(深圳) 86-755-83298787
Http://www.100y.com.tw

© Diodes Incorporated

勝 特 力 材 料 886-3-5753170
胜特力电子(上海) 86-21-34970699
胜特力电子(深圳) 86-755-83298787
Http://www.100y.com.tw

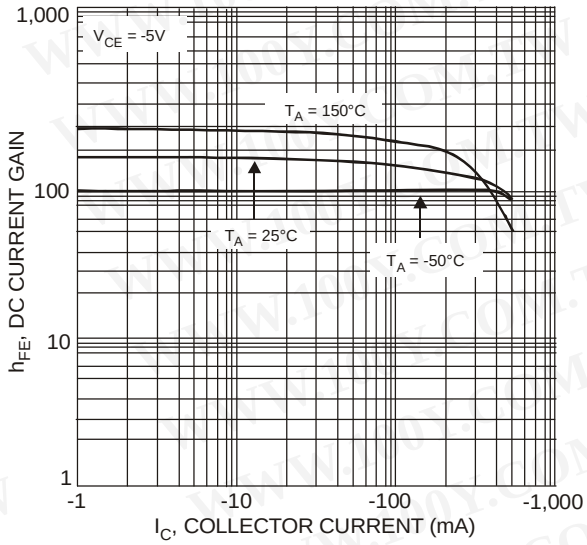

Fig. 2 Typical DC Current Gain vs. Collector Current

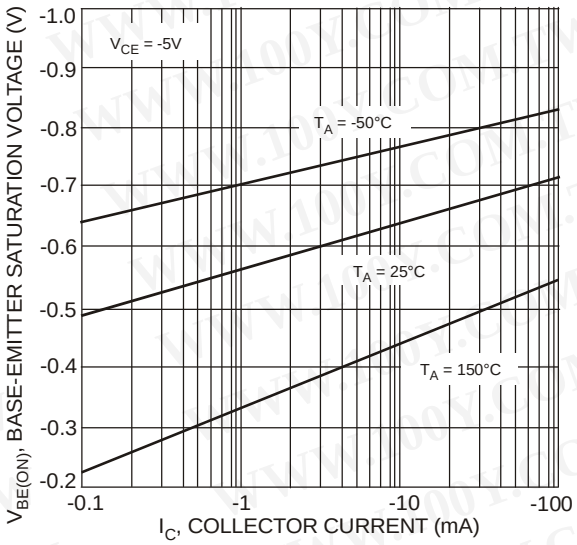

Fig. 4 Typical Base-Emitter Saturation Voltage vs. Collector Current

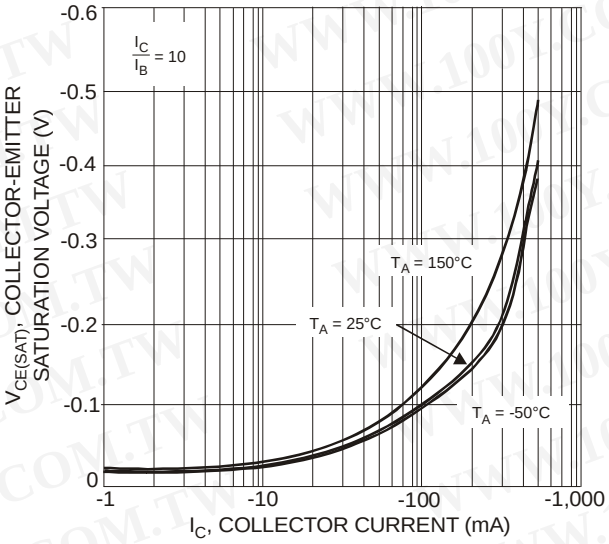

Fig. 3 Typical Collector-Emitter Saturation Voltage vs. Collector Current

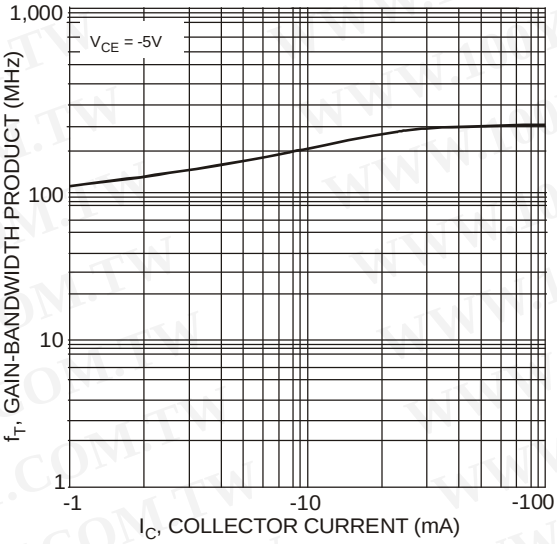

Fig. 6 Typical Gain-Bandwidth Product vs. Collector Current

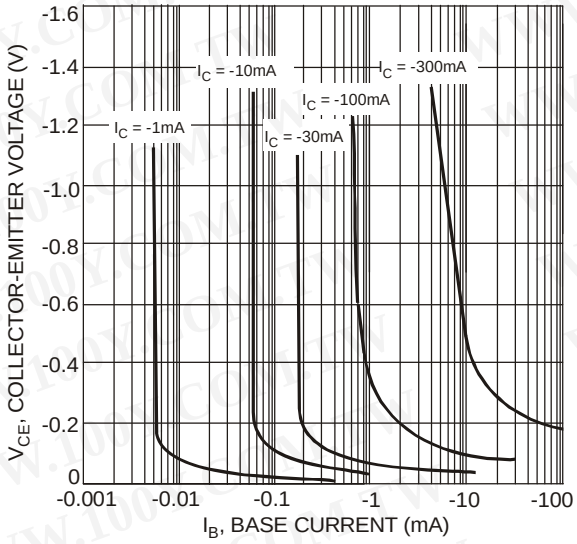

Fig. 7 Typical Collector Saturation Region

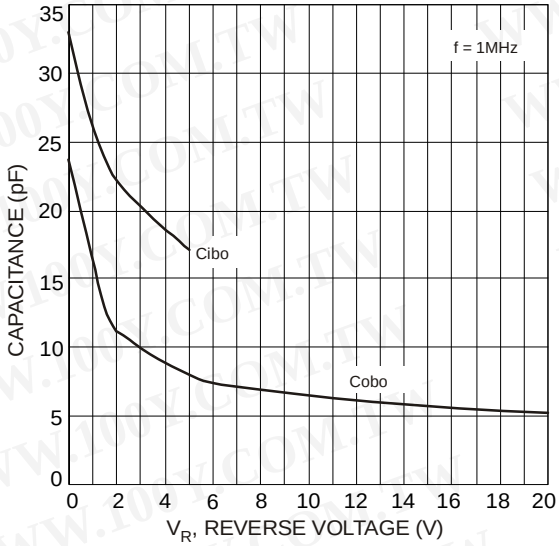

Fig. 5 Typical Capacitance Characteristics

© Diodes Incorporated

Package Outline Dimensions

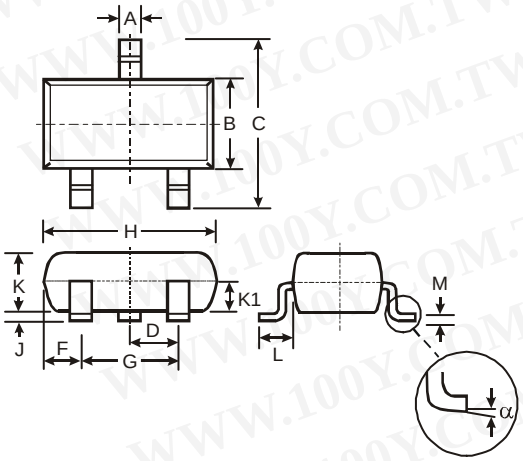

SOT23			
Dim	Min	Max	Typ
A	0.37	0.51	0.40
B	1.20	1.40	1.30
C	2.30	2.50	2.40
D	0.89	1.03	0.915
F	0.45	0.60	0.535
G	1.78	2.05	1.83
H	2.80	3.00	2.90
J	0.013	0.10	0.05
K	0.903	1.10	1.00
K1	-	-	0.400
L	0.45	0.61	0.55
M	0.085	0.18	0.11
α	0°	8°	-
All Dimensions in mm			

Suggested Pad Layout

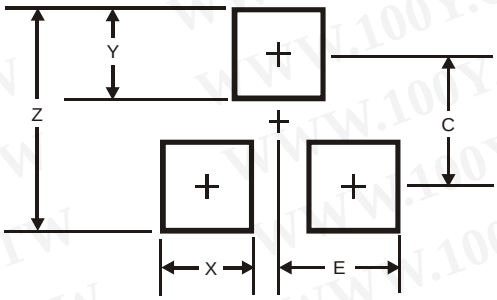

Dimensions	Value (in mm)
Z	2.9
X	0.8
Y	0.9
C	2.0
E	1.35

勝 特 力 材 料 886-3-5753170
胜特力电子(上海) 86-21-34970699
胜特力电子(深圳) 86-755-83298787
Http://www.100y.com.tw

© Diodes Incorporated

IMPORTANT NOTICE

DIODES INCORPORATED MAKES NO WARRANTY OF ANY KIND, EXPRESS OR IMPLIED, WITH REGARDS TO THIS DOCUMENT, INCLUDING, BUT NOT LIMITED TO, THE IMPLIED WARRANTIES OF MERCHANTABILITY AND FITNESS FOR A PARTICULAR PURPOSE (AND THEIR EQUIVALENTS UNDER THE LAWS OF ANY JURISDICTION).

Diodes Incorporated and its subsidiaries reserve the right to make modifications, enhancements, improvements, corrections or other changes without further notice to this document and any product described herein. Diodes Incorporated does not assume any liability arising out of the application or use of this document or any product described herein; neither does Diodes Incorporated convey any license under its patent or trademark rights, nor the rights of others. Any Customer or user of this document or products described herein in such applications shall assume all risks of such use and will agree to hold Diodes Incorporated and all the companies whose products are represented on Diodes Incorporated website, harmless against all damages.

Diodes Incorporated does not warrant or accept any liability whatsoever in respect of any products purchased through unauthorized sales channel. Should Customers purchase or use Diodes Incorporated products for any unintended or unauthorized application, Customers shall indemnify and hold Diodes Incorporated and its representatives harmless against all claims, damages, expenses, and attorney fees arising out of, directly or indirectly, any claim of personal injury or death associated with such unintended or unauthorized application.

Products described herein may be covered by one or more United States, international or foreign patents pending. Product names and markings noted herein may also be covered by one or more United States, international or foreign trademarks.

LIFE SUPPORT

Diodes Incorporated products are specifically not authorized for use as critical components in life support devices or systems without the express written approval of the Chief Executive Officer of Diodes Incorporated. As used herein:

A. Life support devices or systems are devices or systems which:

1. are intended to implant into the body, or
2. support or sustain life and whose failure to perform when properly used in accordance with instructions for use provided in the labeling can be reasonably expected to result in significant injury to the user.

B. A critical component is any component in a life support device or system whose failure to perform can be reasonably expected to cause the failure of the life support device or to affect its safety or effectiveness.

Customers represent that they have all necessary expertise in the safety and regulatory ramifications of their life support devices or systems, and acknowledge and agree that they are solely responsible for all legal, regulatory and safety-related requirements concerning their products and any use of Diodes Incorporated products in such safety-critical, life support devices or systems, notwithstanding any devices- or systems-related information or support that may be provided by Diodes Incorporated. Further, Customers must fully indemnify Diodes Incorporated and its representatives against any damages arising out of the use of Diodes Incorporated products in such safety-critical, life support devices or systems.

Copyright © 2011, Diodes Incorporated

www.diodes.com

勝 特 力 材 料 886-3-5753170
胜特力电子(上海) 86-21-34970699
胜特力电子(深圳) 86-755-83298787
Http://www.100y.com.tw