	REVISION RECORD MODIFICATIONS	DATE	REV.
		2011/01/19	A/0
⚠	NEW		

勝 特 力 材 料 886-3-5753170
胜特力电子(上海) 86-21-34970699
胜特力电子(深圳) 86-755-83298787
Http://www.100y.com.tw

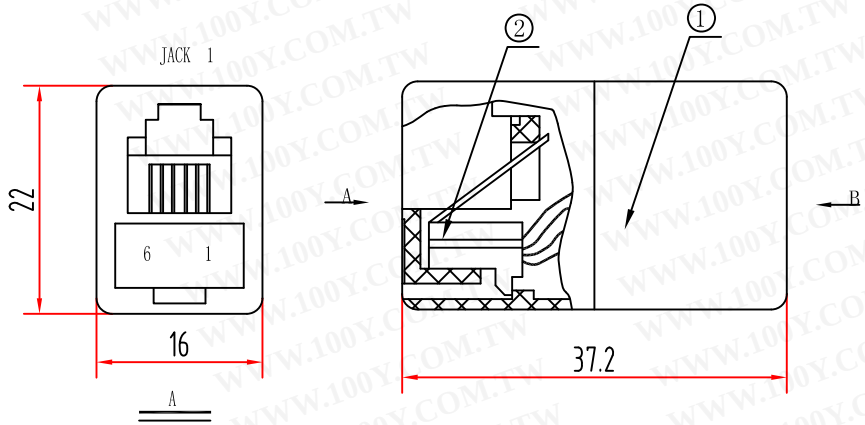

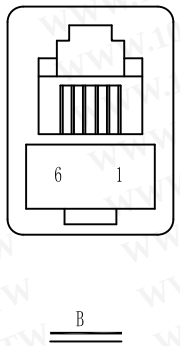

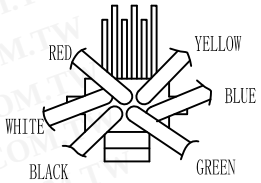

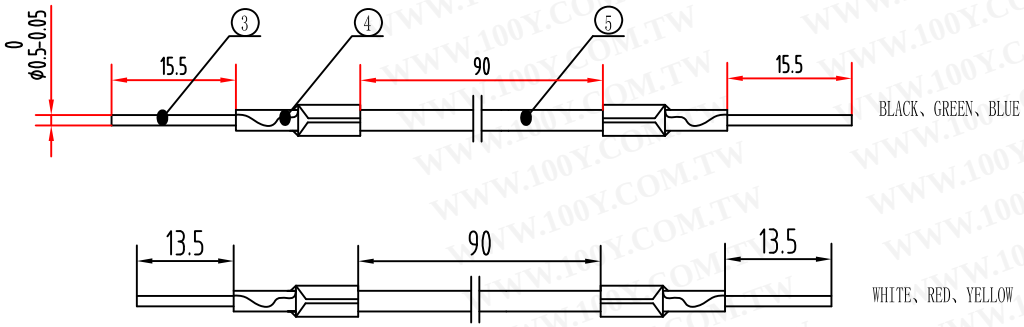

WIRING DIAGRAM

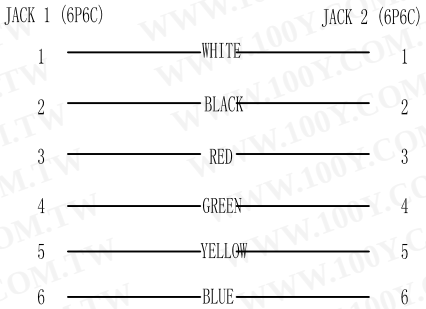

PACKING

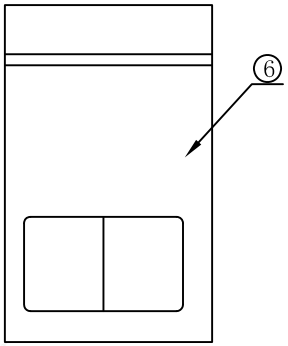

NOTES:

1. Electrical testing:100%
2. Visual inspection:100%
3. ROHS Compliant

MATERIAL LIST:

NO.	MAT. NAME	DESCRIPTION	QT'Y	REMARK
⑥	PE BAG	SPECIFICATINO:80*130*0.03MM	1	
⑤	LINE	OD:0.98 COLOR:WHITE、BLACK、RED、YELLOW、GREEN、BLUE	6	
④	ADAPTER SLEEVE	CU	12	
③	GOLD SILK	CU PLATE GLOD 3U"	12	
②	145 LOCK CORE	ABS COLOR:IVORY	2	
①	KD1-6P Molded case	ABS COLOR:IVORY	1	

DRAW NO.		PRODUCT NAME	2156A		
CUSTOMER		VIEW	TOLERANCE X. ±1.00 X.X ±0.50		
ITEM NO.					
DRAWNBY	CHECKBY	APPOBY	UNTT	MM	
		HanYongXia	Blatt-Nr.	1/1	