THIS DRAWING IS UNPUBLISHED. RELEASED FOR PUBLICATION -,- .
© COPYRIGHT - By - ALL RIGHTS RESERVED.

LOC	DIST
GP	00

REVISIONS

P	LTR	DESCRIPTION	DATE	DWN	APVD
	P	REVISED PER ECO-11-004835	11MAR11	RK	HMR

勝 特 力 材 料 886-3-5753170
胜特力电子(上海) 86-21-34970699
胜特力电子(深圳) 86-755-83298787
Http://www.100y.com.tw

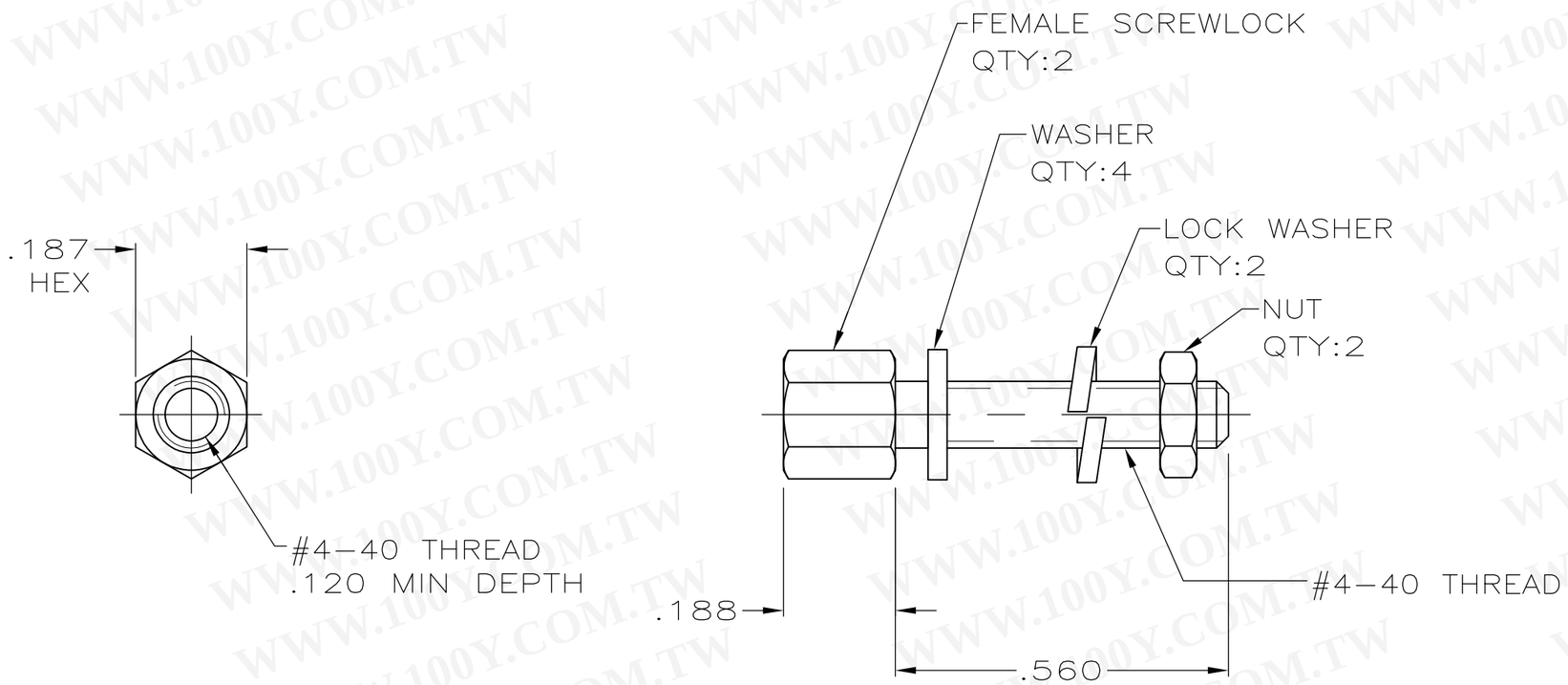

1. ZINC PLATED .000200-.000400 THICK, YELLOW CHROMATE COATING.

2. ZINC PLATED .000200-.000400 THICK, CLEAR CHROMATE COATING.

3. PARTS PACKAGED UNASSEMBLED.

4. PARTS PACKAGED AS A UNIT KIT.

5. PARTS INDIVIDUALLY BULK PACKED & SHIPPED AS A UNIT PACKAGE.

PACKAGING	FINISH	PART NUMBER
5	2	5207719-4
4	2	5207719-3
5	1	5207719-2
4	1	5207719-1

THIS DRAWING IS A CONTROLLED DOCUMENT.

DIMENSIONS: INCHES

TOLERANCES UNLESS OTHERWISE SPECIFIED:

0 PLC	± -
1 PLC	± -
2 PLC	± -
3 PLC	± .005
4 PLC	± -
ANGLES	± -

MATERIAL: COLD ROLLED STEEL PER ASTM A108

FINISH: SEE TABLE

DWN	S.WAITMAN	28JUN05
CHK	C.ROHDE	28JUN05
APVD	M.WALMSLEY	28JUN05
PRODUCT SPEC	—	
APPLICATION SPEC	—	
WEIGHT	—	

TE Connectivity

NAME: SCREWLOCK FEMALE ASSEMBLY, AMPLIMITE

SIZE	CAGE CODE	DRAWING NO	RESTRICTED TO
A3	00779	C-5207719	—

CUSTOMER DRAWING

SCALE	SHEET	REV
4:1	1 OF 1	P