REV.	DESCRIPTION	DRAWN	CHECKED	APPROVED
A	NEW RELEASE	LL 09/11/06'		

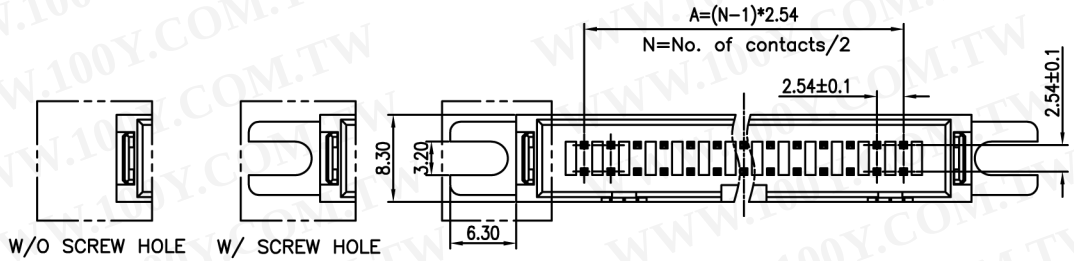

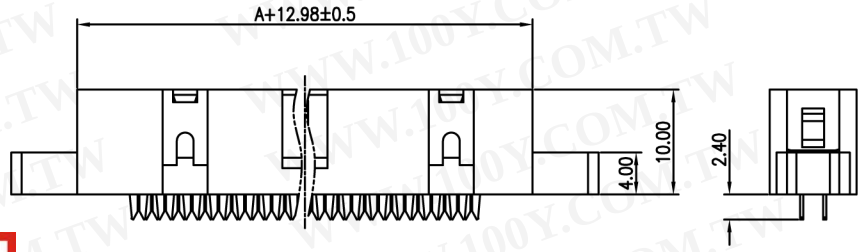

勝 特 力 材 料 886-3-5753170
胜特力电子(上海) 86-21-34970699
胜特力电子(深圳) 86-755-83298787
Http://www.100y.com.tw

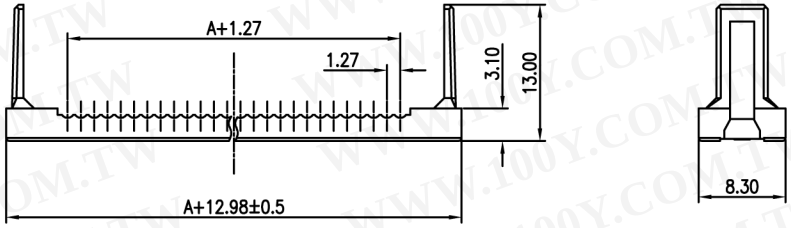

COVER

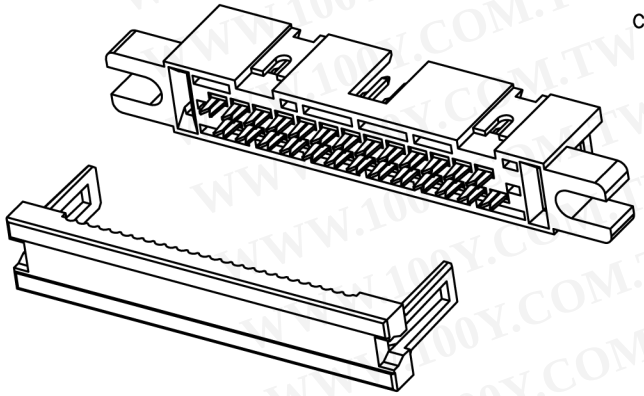

NOTES:

1. MATERIAL
   1.1 INSULATOR:THERMOPLASTIC(UL 94V-0).
   1.2 CONTACT: COPPER ALLOY.
2. SPECIFICATION
   2.1 TEMPERATURE RANGE:-40°C~+105°C.
   2.2 CONTACT RESISTANCE:20mΩ max.
   2.3 INSULATION RESISTANCE:1000MΩ min.
   2.4 DIELECTRIC WITHSTANDING VOLTAGE:AC 500V PER MINUTE.
3. PART NUMBER: DS1015
4. PRODUCT NUMBER CODE:
   DS1015- X X X X X
   - HOUSING COLOR
     A:GRAY
     B:Black
   - CONTACT PLATING
     2: GOLD FLASH + NICKEL
   - STRAIN RELIEF
     M:W/
     N:W/O
   - SCREW HOLE
     M:W/
     N:W/O
   - No. OF CONTACTS
     10 14 16 20 24 26
     30 34 40 50 60 64
   - SERIES No.
     DS1015

GENERAL TOLERANCE		ANGLE TOLERANCE	
X.	±0.60	X.	±5°
.X	±0.38	.X	±3°
.XX	±0.25	.XX	±2°

DRAWING TYPE	CUSTOMER		
SCALE	1:1	SHEET	1 OF 1
DRAWING NO.	C-DS1015-XXXXX		

PROJECTION		TITLE	IDC BOX HEADER MATES WITH PITCH 1.27mm FLAT CABLE
UNITS	mm		
SHEET SIZE	A4	SERIES	DS1015 SERIES

CONNFLY