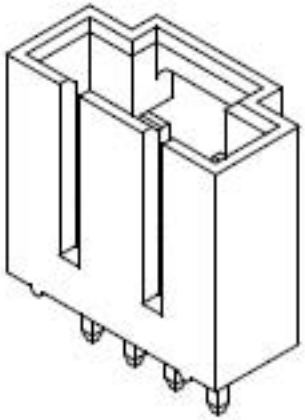

SPECIFICATIONS
Current Rating: 3A AC,DC
Voltage Rating: 250V AC,DC
Temperature Range: −25°C ~ +85°C
Contact Resistance: 20mΩ Max
Insulation Resistance: 1000MΩ Min
Withstanding Voltage: 1500V AC/minute
Pin Material: Brass/Gold−flash
Material: PBT30%GF,UL94V−0
Color: Natural(Black)

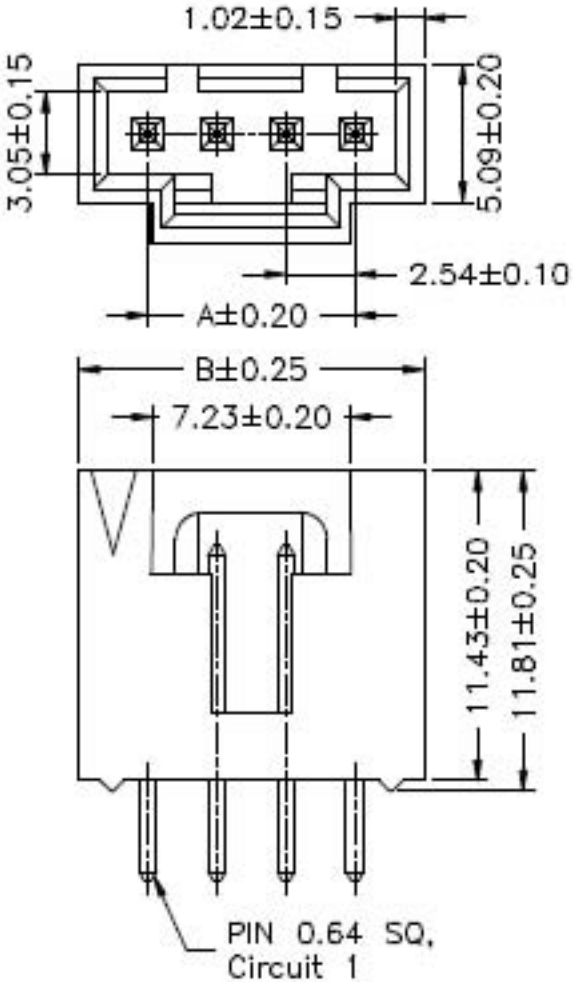

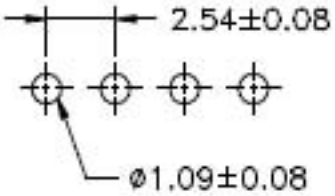

P.C.B LAYOUT

Ordering Information & Dimensions

PART NO.	Dimensions	
	A	B
A2541WV−2P	2.54	7.63
A2541WV−3P	5.08	10.17
A2541WV−4P	7.62	12.71
A2541WV−5P	10.16	15.25
A2541WV−6P	12.70	17.79
A2541WV−7P	15.24	20.33
A2541WV−8P	17.78	22.87
A2541WV−9P	20.32	25.41
A2541WV−10P	22.86	27.95
A2541WV−11P	25.40	30.49
A2541WV−12P	27.94	33.03

UNIT	SCALE	SHEET
mm		1 of 1
DRAWN BY 黎志一 2001.02.01	APPROVED BY 黎志一 2001.02.01	
GENERAL TOLERANCE		
X.X±0.25	ANGLE±	

TITLE:

2.54mm PITCH 180°WAFER