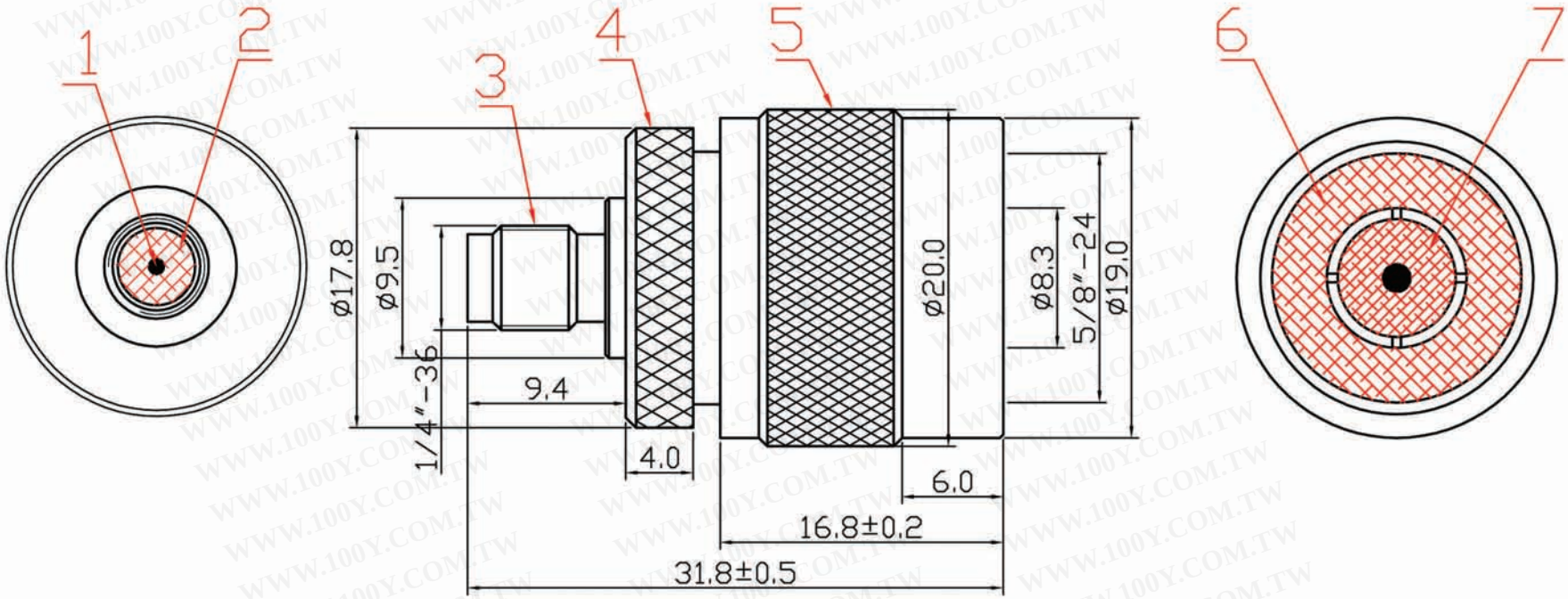

ITEM	DESIGNATION	MATERIAL
7	INSULATOR	POM
6	RUBBER BAND	RUBBER
5	SHELL	BRASS
4	BODY	BRASS
3	FEMALE PART	BRASS
2	INSULATOR	TEF
1	PIN	BRASS

ELECTRICAL CHARACTERISTIC	
①	CONTACT RESISTANCE: ≤10mΩ
②	INSULATION RESISTANCE: ≥20MΩ
③	WITHSTAND VOLTAGE: DC500V
④	CURRENT RATING: 0.5A/DC300V
⑤	OPERATING TEMPERATURE: -250℃～80℃

TOLERANCE

0 - 10	±0.05
10 - 99	±0.5
100 - 999	±10.0
1000 - 9999	±100.00
10000 - 99999	±1000.00

勝 特 力 材 料 886-3-5753170
胜特力电子(上海) 86-21-34970699
胜特力电子(深圳) 86-755-83298787
Http://www.100y.com.tw

REV.	ECO	PART NO.	DATE	BY
A0		1463		
B				

APPROVAL:

SHEET	SCALE	UNIT	REV.
OF		mm	ø

TITLE: SMA FEMALE TO N MALE

CUSTOMER: