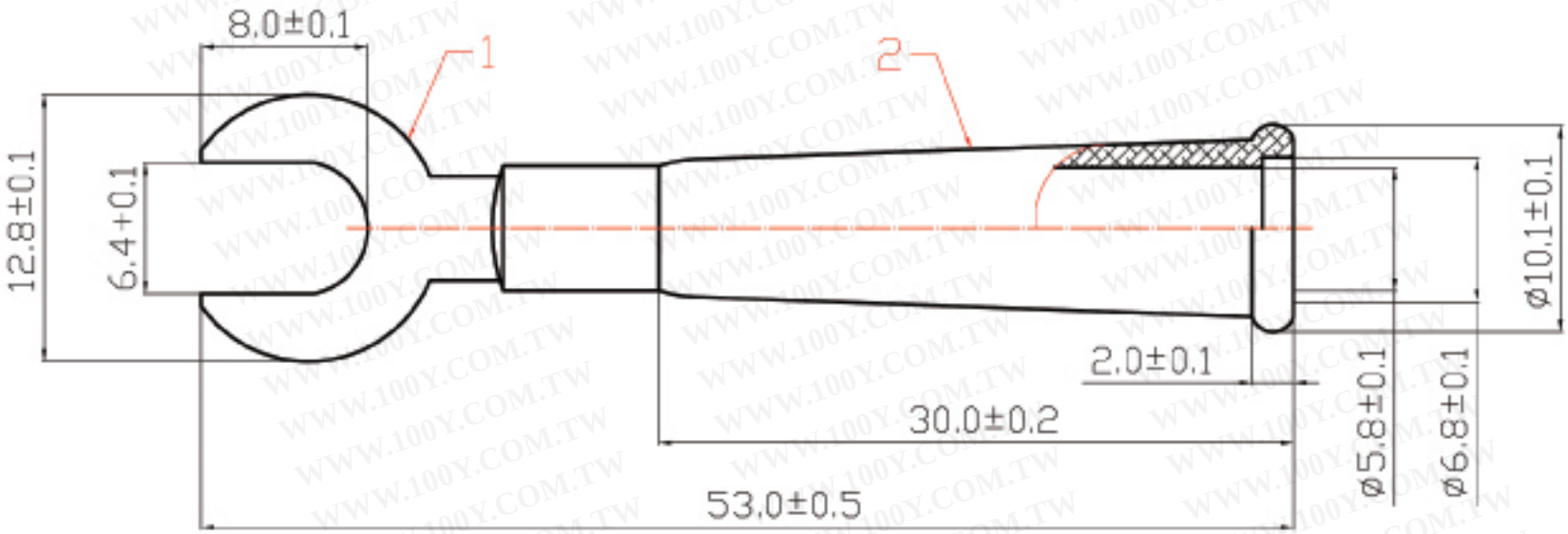

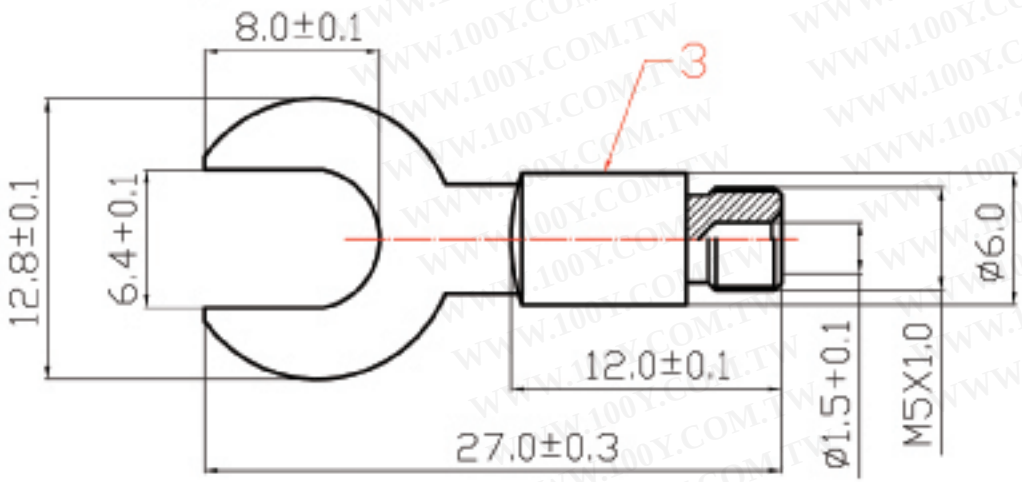

ITEM	DESIGNATION	MATERIAL
3	BODY	BRASS
2	PLASTIC HANDLE	ABS
1	FORK	BRASS

REV	PART NO.& SAMPLE NO.	DATE	BY
A			
B			

TOLERANCE	
0 - 10	±0.05
10 - 99	±0.5
100 - 999	±1.0
1000 - 9999	±100.00
10000 - 99999	±1000.00

SIGNATURES		DATE
DRAFT: ZHOU XIN GUO		04-06-2012
CHECKED:		
APPROVAL:		
SCALE	UNIT	REV
1:1	mm	ø

SHEET OF

TITLE: Arrow Tip Plug(Red/Black)

CUSTOMER

勝 特 力 材 料 886-3-5753170
胜特力电子(上海) 86-21-34970699
胜特力电子(深圳) 86-755-83298787
Http://www.100y.com.tw